This work is protected by US copyright laws and is for instructors' use only.

Instructor's Manual
to accompany

APPLIED FLUID MECHANICS

Sixth Edition

Robert L. Mott
University of Dayton

PEARSON
Prentice Hall

Upper Saddle River, New Jersey
Columbus, Ohio

This work is protected by United States copyright laws and is provided solely for the use of instructors in teaching their courses and assessing student learning. Dissemination or sale of any part of this work (including on the World Wide Web) will destroy the integrity of the work and is not permitted. The work and materials from it should never be made available to students except by instructors using the accompanying text in their classes. All recipients of this work are expected to abide by these restrictions and to honor the intended pedagogical purposes and the needs of other instructors who rely on these materials.

Copyright © 2006 by Pearson Education, Inc., Upper Saddle River, New Jersey 07458.
Pearson Prentice Hall. All rights reserved. Printed in the United States of America. This publication is protected by Copyright and permission should be obtained from the publisher prior to any prohibited reproduction, storage in a retrieval system, or transmission in any form or by any means, electronic, mechanical, photocopying, recording, or likewise. For information regarding permission(s), write to: Rights and Permissions Department.

Pearson Prentice Hall™ is a trademark of Pearson Education, Inc.
Pearson® is a registered trademark of Pearson plc
Prentice Hall® is a registered trademark of Pearson Education, Inc.

Instructors of classes using Mott, *Applied Fluid Mechanics, Sixth Edition,* may reproduce material from the instructor's manual for classroom use.

10 9 8 7 6 5 4 3 2 1

PEARSON
Prentice
Hall

ISBN 0-13-172355-3

Online IM to Accompany

APPLIED FLUID MECHANICS

Sixth Edition

Robert L. Mott

University of Dayton

PEARSON
Prentice Hall

Upper Saddle River, New Jersey
Columbus, Ohio

CHAPTER FIFTEEN
FLOW MEASUREMENT 235

CHAPTER SIXTEEN
FORCES DUE TO FLUIDS IN MOTION 240

CHAPTER SEVENTEEN
DRAG AND LIFT 251

CHAPTER EIGHTEEN
FANS, BLOWERS, COMPRESSORS, AND THE FLOW OF GASES 260

CHAPTER NINETEEN
FLOW OF AIR IN DUCTS 269

SPREADSHEETS 273

CONTENTS

CHAPTER ONE
THE NATURE OF FLUIDS AND THE STUDY OF FLUID MECHANICS 1

CHAPTER TWO
VISCOSITY OF FLUIDS 12

CHAPTER THREE
PRESSURE MEASUREMENT 19

CHAPTER FOUR
FORCES DUE TO STATIC FLUIDS 25

CHAPTER FIVE
BUOYANCY AND STABILITY 44

CHAPTER SIX
FLOW OF FLUIDS 61

CHAPTER SEVEN
GENERAL ENERGY EQUATION 81

CHAPTER EIGHT
REYNOLDS NUMBER, LAMINAR FLOW, AND TURBULENT FLOW
AND ENERGY LOSSES DUE TO FRICTION 94

CHAPTER NINE
VELOCITY PROFILES FOR CIRCULAR SECTIONS AND
FLOW FOR NONCIRCULAR SECTIONS 113

CHAPTER TEN
MINOR LOSSES 129

CHAPTER ELEVEN
SERIES PIPE LINE SYSTEMS 141

CHAPTER TWELVE
PARALLEL PIPE LINE SYSTEMS 187

CHAPTER THIRTEEN
PUMP SELECTION AND APPLICATION 213

CHAPTER FOURTEEN
OPEN CHANNEL FLOW 218

APPLIED FLUID MECHANICS
Sixth Edition

Robert L. Mott

Prentice-Hall Publishing Company

Description of Spreadsheets Included on the CD in the Book

Introduction

This book includes a CD-ROM that contains ten computational aids that are keyed to the book. The files are written as Microsoft Excel spreadsheets using Version 2002 on Windows XP.

The ten spreadsheets are all included in one workbook called Series Pipe Systems-Master. The names of each spreadsheet described below are on the tabs at the bottom of the workbook when it is opened. You must choose which is appropriate for a given problem. Most names start with either *I, II,* or *III* indicating whether the spreadsheet is for a Class *I, Class II,* or Class *III* pipe line system as defined in Chapter 11 of the text.

The spreadsheets are designed to facilitate the numerous calculations required to solve the variety of problems in Chapter 11 Series Pipeline Systems. Many of the spreadsheets appear in the text. Others were prepared to produce solutions for the Solutions Manual. The given spreadsheets include data and results from certain figures in the text, from example problems, or in problems from the end of Chapters 8, 11, and 13 containing the analysis and design procedures featured in the programs.

The following sections give brief descriptions of each spreadsheet. Many are discussed in the text in more extensive detail. It is expected that you will verify all of the elements of each spreadsheet before using them for solutions to specific problems.

Using the Spreadsheets: ***It is recommended that the given spreadsheets be maintained as they initially appear on the CD. To use them for solving other problems, call up the master workbook in Excel and use the "Save as" command to name it something different. That version can then be used for a variety of problems of your*** **own choice.** ***Be careful that you do not modify the contents of critical cells containing complex equations. However, you are encouraged to add additional features to the spreadsheets to enhance their utility.***

The principles involved in the spreadsheets come from Chapters 6 - 11 and you should study the concepts and the solution techniques for each type of problem before using the given spreadsheets. It is highly recommended that you work sample problems by hand first. Then enter the appropriate data into the spreadsheet to verify the solution. In most spreadsheets, the data that need to be entered are identified by gray-shaded areas and by italic type. Results are typically shown in bold type.

I Power SI: The objective of problems of this type is to compute the amount of power required to drive a pump to deliver a given amount of fluid through a given system. Energy losses are considered. All data must be in the listed SI units. The solution procedure is for a Class I series pipe line system. The following is a summary of the steps you must complete.

1. Enter the problem identification information first. The given data in the spreadsheet are for example Problem 11.1 for the system shown in Figure 11.2.

2. Describe two appropriate reference points for completing the analysis of the general energy equation.

3. Specify the required volume flow rate, *Q*, in m^3/s.

4. Enter the pressures (in kPa), velocities (in m/s), and elevations (in m) at the reference points in the ***System Data:*** at the top of the sheet. If the velocity at either reference point is in a pipe, you may use a computed velocity from $v = Q/A$ that is included in the data cells for the two pipes. In such cases, you enter the Excel command "=B20" for the velocity in pipe 1 and "=E20" for the velocity in pipe 2.

5. Enter the fluid properties of specific weight (in kN/m^3) and kinematic viscosity (in m^2/s).

6. Enter pipe data, including flow diameter *D* (in m), pipe wall roughness *a* (in m from Table 8.2), and length *L* (in m). Other pipe-related data are computed by the spreadsheet. Equation 8-7 is used to compute the friction factor.

7. Enter energy loss coefficients, *K,* for all loss-producing elements in both pipes. See Chapters 8, 10, and 11 for the proper form for *K* for each element and for necessary data. The value for *K* for pipe friction is computed automatically from known data in the *"Pipe"* section. Specify the number of like elements in the *"Qty."* column. Enter brief descriptions of each element so your printout is keyed to the given problem and so you can observe the energy loss contribution of each element. Space is given for up to eight different kinds of energy loss elements. Enter zero for the value of the *K* factor for those not needed.

8. The ***Results:*** section at the bottom of the spreadsheet includes the total energy loss *h<,* the total head on the pump *h¿,* and the power added to the fluid by the pump *P,.* If you enter an efficiency for the pump, the power input to the pump *P,* is computed.

I Power US: Same as ***Power SI:***, except U.S. Customary units are used. The given solution is for Problem 11.29 for the system shown in Figure 11.26. The first reference point is taken just before the pump inlet. Therefore there are no friction losses or minor losses considered in the suction pipe. The length is given ta be zero and all *K* factors are zero for Pipe 1. In Pipe 2, pipe friction, the loss in the elbow, and the loss in the nozzle are included.

I Pressure SI: Most of the layout and data entry for this spreadsheet are the same as those in the first two spreadsheets, ***I Power SI,*** and ***I Power US***. The difference here is that the analysis determines the pressure at one point in the system when the pressure at some other point is known. Class I systems with one or two pipe sizes including minor losses can be analyzed. This spreadsheet uses the known pressure at some starting point and computes the pressure at a downstream point, considering changes in elevation, velocity head, pipe friction and minor losses. The example is the solution of Problem 11.7 for the

system shown in Figure 11.17. p_2 is assumed to be 100 kPa. p_2 is computed to be 78.21 kPa. Then Δp = -21.79 kPa.

I Pressure US: This spreadsheet is virtually identical to ***I Pressure SI:*** except for the different unit system used. The example is the solution for Problem 11.3 using the system shown in Figure 11.13. An important difference occurs here because the objective of the problem is to compute the upstream pressure at the outlet of a pump when the desired downstream pressure at the inlet to the hydraulic cylinder is specified. You should examine the contents of cells B7 and B8 where the pressures are listed and E43 and E44 where the actual calculations for pressure change are performed. The changes demonstrated here between ***I Pressure SI:*** and ***I Pressure US:*** show how the spreadsheets can be adapted to specific types of problems. Knowledge of the fluid mechanics of the problems and familiarity with the design of the spreadsheet are required to make such adjustments accurately.

II-A & II-B SI: This spreadsheet solves Class II series pipe line problems using either Method II-A or Method II-B as described in Chapter 11 of the text. SI Metric units are used. Example Problem 11.3 using the system shown in Figure 11.7 is solved in the given sheet.

You should review the details of these sheets from the discussions in the book. In summary, Method II-A is used for finding the maximum velocity of flow and volume flow rate that a given pipe can deliver while limiting the pressure drop to a specified value, without any minor losses. This is accomplished by the upper part of the spreadsheet only. Enter the pressures at two system reference points in the ***System Data:*** near the top of the sheet. Enter other data called for in the gray shaded cells. Refer to Example Problem 11.2 in the text for an illustration of the use of just the upper part of this sheet to solve Class II problems without minor losses.

The lower part of the spreadsheet implements Method II-B for which minor losses are considered in addition to the friction losses in the pipe. The solution procedure is iterative, requiring you to assume a volume flow rate in the upper part of the lower section of the spreadsheet that is somewhat lower than the result of the Method II-A solution directly above. Enter the minor loss coefficients in the lower part of the spreadsheet. As each estimate for flow rate is entered, the pressure at a target point, called p_2, is computed. You must compare this pressure with the desired pressure. Successive changes in the estimate can be made very rapidly until the desired pressure is acceptable within a small tolerance that you decide.

II-A & II-B US: This spreadsheet is identical to ***II-A & II-B:*** except for using the U.S. Customary unit system. Problem 11.10 is solved in the example. The system in this problem has no minor losses so the upper part of the spreadsheet shows the most pertinent data and results. The lower part has been adjusted to use the same volume flow rate as the result from the upper part and all minor losses have been set to zero. The result is that the pressure at the target point, p_2, is very near the desired pressure. The small difference is due to rounding and a possible difference between the result from Equation 11.3 used to solve for Q in Method II-A and the calculation of friction factor and other terms in Method II-B.

III-A & III-B SI: Class III series pipe line problems require the determination of the minimum required size of pipe to carry a given volume flow rate of fluid with a limiting pressure drop. Both Method III-A and Method III-B as described in the text are shown on this spreadsheet. If only pipe friction loss is considered, then only the upper part using Method III-A is pertinent.

Problem 11.18 is solved by the given spreadsheet data. Only pipe friction losses are included and the solution computes that the minimum acceptable pipe flow diameter is 0.0908 m (90.8 mm). But the problem statement calls for the specification of the smallest standard Type K copper tube. So the lower part of the spreadsheet shows the application of a 4-in Type K copper tube having a flow diameter of 0.09797 m (97.97 mm). The spreadsheet then computes the predicted pressure at the end of the system for the given volume flow rate, 0.06 m'/s. Note that the result predicts that the pressure at the end of the tube would be 48.13 kPa. In reality, the pressure there is zero as the problem states that the flow exits into the atmosphere from the end of the tube. Actually, then, the 4-in tube will permit a higher flow rate for the same pressure drop. You could use the spreadsheet *II-A* 4 *II-B SI:* to compute the actual expected volume flow rate when using the 4-in Type K copper tube.

Class III systems with minor losses are demonstrated in the next spreadsheet.

III-A & III-B US: This spreadsheet is identical to ***III-A & III-B SI:*** described above except for the use of U.S. Customary units instead of SI Metric units. The solution to Example Problem 11.6 from the text is shown and this spreadsheet is included in the text with extensive description of how it is used. Please refer to the text.

The problem includes some minor losses so that both the upper part (Method III-A) and the lower part (Method III-B) are used. The result from Method III-A predicts that the minimum acceptable pipe flow diameter is 0.3090 ft if no minor losses are considered. Using a standard 4-in schedule 40 steel pipe (D = 0.3355 ft) with the minor losses included in Method III-B shows that the pressure at the target point, p_2, is greater than the minimum acceptable pressure. Therefore, that pipe size is satisfactory.

System Curve US: This spreadsheet is the same as that shown in Figure 13.41 in Chapter 13 of the text. It is used to determine the operating point of a pump selected for the system shown in Figure 13.40 and described in Example Problem 13.4. Refer to the extensive discussion of system curves and this spreadsheet in Sections 13.10 and 13.14.

The spreadsheet includes two pages. The first page is an analysis of the total head on the pump when the desired volume flow rate, 0.5011 ft^3/s (225 gal/min), flows in the system. This sheet is basically the same as that in the spreadsheet called ***I Power US:***, discussed earlier. But the final calculation of the power delivered by the pump to the fluid has been deleted.

After seeing the required total head on the pump for the desired flow rate, the user has selected a centrifugal pump, model 2x3-10 with a 9-in impeller, using the pump performance curves from Figure 13.27. This pump will actually deliver somewhat more flow at this head. The spreadsheet was used to compute data for the system curve that is a plot of the total head versus the volume flow rate (capacity) delivered. Several data points for the resulting total head for different flow rates from zero to 275 gal/min were computed. These were entered on page 2 of the spreadsheet and the system curve was plotted on the graph shown there. Simultaneously, data from the actual performance curve for the selected pump were entered and plotted on the same graph. Where the two curves intersect is the operating point, predicting that the pump will deliver approximately 240 gal/min. Then you must go back to Figure 13.27 to determine the other performance parameters at this operating point, efficiency, power required, and $NPSH_R$ (net positive suction head required).

Note that no spreadsheet system using SI Metric units for operating point is included in this set. It would be good practice for you to copy this given spreadsheet and convert it to SI Metric units. You should examine the contents of each cell to determine if the equations must be modified with different conversion factors to achieve an accurate result.

Friction Factor: This is a simple spreadsheet whose sole purpose is to compute the friction factor using Equation 8-7 from Section 8.8 of the text. We refer to this equation as the *Swamee-Jain Equation* for its developers. See Reference 3 in Chapter 8.

The spreadsheet shows the computation of the friction factor for the data from Problem 8.28. Data entry is similar to that used in the other spreadsheets described above. Either SI Metric or U.S. Customary units can be used because only dimensionless quantities are used in the equation. But units must be consistent within a given problem. You might want to use this spreadsheet to test your ability to read accurately the Moody Diagram, Figure 8.6.

***HYDROFLO 2, HCALC,* and *PumpBase* Software**
by *TAHOE DESIGN SOFTWARE*
Included on the CD with this book

APPLIED FLUID MECHANICS
Sixth Edition
Robert L. Mott

This book includes a CD that contains student versions of three powerful software programs for the solution of a variety of pipeline design and analysis problems. Created by Tahoe Design Software of Nevada City, CA, ***HYDROFLO 2, HCALC,*** and *PumpBase* can be used for problem solutions in Chapters 8 and 10 -13 of the book. More information about Tahoe Design Software and the professional versions of these programs can be found on their website www.tahoesoft.com.

HYDROFLO 2 is a unique fluid conveyance system design tool for full pipe incompressible flow conditions. It makes it easy to model and analyze fluid transport systems found in industrial process, water supply, petroleum transport, mining de-watering and HVAC systems. During the design process, you view a vertical elevation-scaled representation of your fluid conveyance system in HYDROFLO's workspace. Elements (such as pipes, valves, etc.) can be added to your design with drag-and-drop and cut-and-paste ease. HYDROFLO's clipboard enables near instant creation of duplicate parallel lines. Element data and analysis results can be viewed simply by placing the cursor over an element. HYDROFLO's Group Editor eliminates repef.itive and tedious editing tasks.

The academic version of HYDROFLO can model liquid conveyance systems with single sources and single discharges and up to 20 pipes, 20 fittings and valves, 3 pumps, and up to nine parallels. Gauges can be placed anywhere in a line to determine the pressure head at a point of interest, to start or end parallels, or to depict elevation changes or vertical bends in a line. Many conveyance systems include pumps in series or parallel and HYDROFLO can easily analyze these systems. See Section 13.15 in the book.

Many types of fluid flow problems can be solved, such as

- Validation/calibration of existing pipeline systems.
- Modeling a proposed system's operation.
- Determination of line head losses at a specific flow rate. (termed a forced-flow system).
- Analysis of cavitation and net positive suction head (NPSH) problems.
- Comparison of equivalent SI unit to English unit designs.
- Modeling of recirculating and gravity (non-pumped) flow systems.

Pipe head losses can be calculated using the Hazen-Williams equation for water flow (Section 8.9 in the book) or the Darcy-Weisbach equation for other types of incompressible fluids. We use the term *Darcy's equation* in the book. See Section 8.5.

HYDROFLO's extensive liquid property database can be accessed to obtain hundreds of liquid properties. Accurate analyses of liquid transport systems require use of precise liquid property data. Your custom liquid property descriptions can be saved in HYDROFLO's

database for later use. System data can be entered and displayed in standard English, SI or a mix of units.
HYDROFLO also performs $NPSH_A$ (net positive suction head available) calculations to determine possible cavitation situations. Once a pump's operating conditions are found, PumpBase can be used to find the best pumps for the application.

PumpBase provides an extensive searchable database for commercially available pumps that meet the requirements for a given system. Only a few data values must be input for basic operation of the program; the operating point for a desired volume flow rate at the corresponding total dynamic head *TDH* and the total static head h_o, as found from Eq. (13-11). The program fits a second degree equation between those two points and plots that as the system curve. See Section 13.10 in the book. The program will search its database, select several candidate pumps that meet the specifications, and report a list that is ordered by pump efficiency. You may select any candidate pump and call for its performance curve to be displayed along with the system curve and listing of such operating parameters as the impeller diameter, actual flow rate, power required efficiency, and $NPSH_R$. You are advised to verify that the selected pump meets all requirements.

More input data are required if the fluid is not cool water, a limit for $NPSH_R$ is to be specified, or a certain type of pump is desired.

HCALC is a handy calculator tool that resides in the system tray for easy access. It performs the calculations for any variable in the flow rate equation, $Q = Av$, or the Darcy-Weisbach equation, $h_L = f(L/D)(v^2/2g)$, when sufficient data are entered for fluid properties, pipe dimensions, roughness, and so forth. Reynolds number and friction factor are also calculated. You may select either SI or U.S. Customary units.

Suggestions for use of these programs:

As with any software, it is essential that the user have a solid understanding of the principles involved in the analyses performed by the software as well as the details of data entry and interpretation of results. It is advised that practice with hand calculations for representative problems be completed before using the software, Then use the results of known, accurately-solved problems with the software to verify that it is being used correctly and to gain confidence in its capabilities.

The following types of problems and projects can be solved with these programs:

- Energy losses due to friction in straight pipes and tubes (Chapter 8)
- Energy losses due to valves and fittings (Chapter 10)
- Analysis of series pipeline systems (Chapter 11)
- Analysis of parallel pipeline systems (Chapter 12)
- Analysis of pumped pipeline systems (Chapters 11-13)
- Selection of a suitable pump for a given system (Chapter 13)
- Design aid for design problems such as those outlined at the end of Chapter 13.
- Extensive system design as a senior design project.

In the author's own teaching of a first course in fluid mechanics, a design project is assigned after class coverage of Chapter 11 on Series Pipeline Systems. Each student is given a project description and data adapted from the design problems listed at the end of Chapter 13 after the Problems. They are expected to produce the design of a pumped fluid flow system,

Given the need to pump a give volume flow rate of a specified fluid from a particular source to a destination, completely define the configuration of the system, including:

- Pipe types and sizes
- Length of pipe for all parts of the system
- Layout of the piping system
- Location of the pump
- Types and sizes of all valves and fittings and their placement
- List of materials required for the system
- Analysis of the pressure at pertinent points
- Determination of the total dynamic head on the pump
- Specification of a suitable pump having good efficiency and able to deliver the required volume flow rate in the system as designed
- Assurance that the specified pump has a satisfactory $NPSH_R$ to prevent cavitation over the entire range of expected system operation
- Written report documenting the design and analyses performed using good report writing practice

The use of the Tahoe Design Software programs after learning the fundamentals of fluid system design analysis allows more comprehensive exploration of possible designs and the completion of a more optimum design. The experience is also useful for students as they move into career positions where the use of such software is frequently expected.

CHAPTER ONE

THE NATURE OF FLUIDS AND THE STUDY OF FLUID MECHANICS

Conversion factors

1.1 $1250\text{ mm}(1\text{ m}/10^3\text{ mm}) = \mathbf{1.25\text{ m}}$

1.2 $1600\text{ mm}^2[1\text{ m}^2/(10^3\text{ mm})^2] = \mathbf{1.6 \times 10^{-3}\text{ m}^2}$

1.3 $3.65 \times 10^3\text{ mm}^3[1\text{ m}^3/(10^3\text{ mm})^3] = \mathbf{3.65 \times 10^{-6}\text{ m}^3}$

1.4 $2.05\text{ m}^2[(10^3\text{ mm})^2/\text{m}^2] = \mathbf{2.05 \times 10^6\text{ mm}^2}$

1.5 $0.391\text{ m}^3[(10^3\text{ mm})^3/\text{m}^3] = \mathbf{391 \times 10^6\text{ mm}^3}$

1.6 $55.0\text{ gal}(0.00379\text{ m}^3/\text{gal}) = \mathbf{0.208\text{ m}^3}$

1.7 $\dfrac{80\text{ km}}{\text{h}} \times \dfrac{10^3\text{ m}}{\text{km}} \times \dfrac{1\text{ h}}{3600\text{ s}} = \mathbf{22.2\text{ m/s}}$

1.8 $25.3\text{ ft}(0.3048\text{ m/ft}) = \mathbf{7.71\text{ m}}$

1.9 $1.86\text{ mi}(1.609\text{ km/mi})(10^3\text{ m/km}) = \mathbf{2993\text{ m}}$

1.10 $8.65\text{ in}(25.4\text{ mm/in}) = \mathbf{220\text{ mm}}$

1.11 $2580\text{ ft}(0.3048\text{ m/ft}) = \mathbf{786\text{ m}}$

1.12 $480\text{ ft}^3(0.0283\text{ m}^3/\text{ft}^3) = \mathbf{13.6\text{ m}^3}$

1.13 $7390\text{ cm}^3[1\text{ m}^3/(100\text{ cm})^3] = \mathbf{7.39 \times 10^{-3}\text{ m}^3}$

1.14 $6.35\text{ L}(1\text{ m}^3/1000\text{ L}) = \mathbf{6.35 \times 10^{-3}\text{ m}^3}$

1.15 $6.0\text{ ft/s}(0.3048\text{ m/ft}) = \mathbf{1.83\text{ m/s}}$

1.16 $\dfrac{2500\text{ ft}^3}{\text{min}} \times \dfrac{0.0283\text{ m}^3}{\text{ft}^3} \times \dfrac{1\text{ min}}{60\text{ s}} = \mathbf{1.18\text{ m}^3/\text{s}}$

Consistent units in an equation

1.17 $\upsilon = \dfrac{s}{t} = \dfrac{0.50\text{ km}}{10.6\text{ s}} \times \dfrac{10^3\text{ m}}{\text{km}} = \mathbf{47.2\text{ m/s}}$

1.18 $\upsilon = \frac{s}{t} = \frac{1.50\text{ km}}{5.2\text{ s}} \times \frac{3600\text{ s}}{\text{h}} = \mathbf{1038\ km/h}$

1.19 $\upsilon = \frac{s}{t} = \frac{1000\text{ ft}}{14\text{ s}} \times \frac{1\text{ mi}}{5280\text{ ft}} \times \frac{3600\text{ s}}{\text{h}} = \mathbf{48.7\ mi/h}$

1.20 $\upsilon = \frac{s}{t} = \frac{1.0\text{ mi}}{5.7\text{ s}} \times \frac{3600\text{ s}}{\text{h}} = \mathbf{632\ mi/h}$

1.21 $a = \frac{2s}{t^2} = \frac{(2)(3.2\text{ km})}{(4.7\text{ min})^2} \times \frac{10^3\text{ m}}{\text{km}} \times \frac{1\text{ min}^2}{(60\text{ s})^2} = \mathbf{8.05 \times 10^{-2}\ m/s^2}$

1.22 $t = \sqrt{\frac{2s}{a}} = \sqrt{\frac{(2)(13\text{ m})}{9.81\text{ m/s}^2}} = \mathbf{1.63\ s}$

1.23 $a = \frac{2s}{t^2} = \frac{(2)(3.2\text{ km})}{(4.7\text{ min})^2} \times \frac{10^3\text{ m}}{\text{km}} \times \frac{1\text{ ft}}{0.3048\text{ m}} \times \frac{1\text{ min}^2}{(60\text{ s})^2} = \mathbf{0.264\ \frac{ft}{s^2}}$

1.24 $t = \sqrt{\frac{2s}{a}} = \sqrt{\frac{(2)(53\text{ in})}{32.2\text{ ft/s}^2} \times \frac{1\text{ ft}}{12\text{ in}}} = \mathbf{0.524\ s}$

1.25 $KE = \frac{m\upsilon^2}{2} = \frac{(15\text{ kg})(1.2\text{ m/s})^2}{2} = 10.8\,\frac{\text{kg} \cdot \text{m}^2}{\text{s}^2} = \mathbf{10.8\ N \cdot m}$

1.26 $KE = \frac{m\upsilon^2}{2} = \frac{(3600\text{ kg})}{2} \times \left(\frac{16\text{ km}}{\text{h}}\right)^2 \times \frac{(10^3\text{ m})^2}{\text{km}^2} \times \frac{1\text{ h}^2}{(3600\text{ s})^2} = \mathbf{35.6 \times 10^3\,\frac{kg \cdot m^2}{s^2}}$

$\boldsymbol{KE} = \mathbf{35.6\ kN \cdot m}$

1.27 $KE = \frac{m\upsilon^2}{2} = \frac{75\text{ kg}}{2} \times \left(\frac{6.85\text{ m}}{\text{s}}\right)^2 = 1.76 \times 10^3\,\frac{\text{kg} \cdot \text{m}^2}{\text{s}^2} = \mathbf{1.76\ kN \cdot m}$

1.28 $m = \frac{2(KE)}{\upsilon^2} = \frac{(2)(38.6\text{ N} \cdot \text{m})}{1} \times \left(\frac{\text{h}}{31.5\text{ km}}\right)^2 \times \frac{1\text{ kg} \cdot \text{m}}{\text{s}^2 \cdot \text{N}} \times \frac{(3600\text{ s})^2}{\text{h}^2} \times \frac{1\text{ km}^2}{(10^3\text{ m})^2}$

$m = \frac{(2)(38.6)(3600)^2}{(31.5)^2(10^3)^2}\text{ kg} = \mathbf{1.008\ kg}$

1.29 $m = \frac{2(KE)}{\upsilon^2} = \frac{(2)(94.6\text{ mN} \cdot \text{m})}{(2.25\text{ m/s})^2} \times \frac{10^{-3}\text{ N}}{\text{mN}} \times \frac{1\text{ kg} \cdot \text{m}}{\text{s}^2 \cdot \text{N}} \times \frac{10^3\text{ g}}{\text{kg}} = \mathbf{37.4\ g}$

1.30 $\upsilon = \sqrt{\frac{2(KE)}{m}} = \sqrt{\frac{2(15\text{ N} \cdot \text{m})}{12\text{ kg}} \times \frac{1\text{ kg} \cdot \text{m/s}^2}{\text{N}}} = \mathbf{1.58\ m/s}$

1.31 $$\upsilon = \sqrt{\frac{2(KE)}{m}} = \sqrt{\frac{2(212\ \text{mN}\cdot\text{m})}{175\ \text{g}} \times \frac{10^{-3}\ \text{N}}{\text{mN}} \times \frac{10^{3}\ \text{g}}{\text{kg}} \times \frac{1\ \text{kg}\cdot\text{m}}{\text{s}^2\cdot\text{N}}} = \mathbf{1.56\ m/s}$$

1.32 $$KE = \frac{m\upsilon^2}{2} = \frac{(1\ \text{slug})(4\ \text{ft/s})^2}{2} \times \frac{1\ \text{lb}\cdot\text{s}^2/\text{ft}}{\text{slug}} = \mathbf{8.00\ lb\cdot ft}$$

1.33 $$KE = \frac{m\upsilon^2}{2} = \frac{w\upsilon^2}{2g} = \frac{(8000\ \text{lb})(10\ \text{mi})^2}{(2)(32.2\ \text{ft/s}^2)(\text{h})^2} \times \frac{1\ \text{h}^2}{(3600\ \text{s})^2} \times \frac{(5280\ \text{ft})^2}{\text{mi}^2}$$

$$KE = \frac{(8000)(10)^2(5280)^2}{(2)(32.2)(3600)^2}\ \text{lb}\cdot\text{ft} = \mathbf{26700\ lb\cdot ft}$$

1.34 $$KE = \frac{m\upsilon^2}{2} = \frac{w\upsilon^2}{2g} = \frac{(150\ \text{lb})(20\ \text{ft/s})^2}{(2)(32.2\ \text{ft/s}^2)} = \mathbf{932\ lb\cdot ft}$$

1.35 $$m = \frac{2(KE)}{\upsilon^2} = \frac{2(15\ \text{lb}\cdot\text{ft})}{(2.2\ \text{ft/s}^2)^2} = 6.20\ \frac{\text{lb}\cdot\text{s}^2}{\text{ft}} = \mathbf{6.20\ slugs}$$

1.36 $$w = \frac{2g(KE)}{\upsilon^2} = \frac{2(32.2\ \text{ft})(38.6\ \text{lb}\cdot\text{ft})(\text{h}^2)}{\text{s}^2(19.5\ \text{mi})^2} \times \frac{1\ \text{mi}^2}{(5280\ \text{ft})^2} \times \frac{(3600\ \text{s})^2}{\text{h}^2}$$

$$w = \frac{(2)(32.2)(38.6)(3600)^2}{(19.5)^2(5280)^2}\ \text{lb} = \mathbf{3.04\ lb}$$

1.37 $$\upsilon = \sqrt{\frac{2g(KE)}{w}} = \sqrt{\frac{2(32.2\ \text{ft/s}^2)(10\ \text{lb}\cdot\text{ft})}{30\ \text{lb}}} = \mathbf{4.63\ ft/s}$$

1.38 $$\upsilon = \sqrt{\frac{2g(KE)}{w}} = \sqrt{\frac{2(32.2\ \text{ft/s}^2)(30\ \text{oz}\cdot\text{in})}{6.0\ \text{oz}} \times \frac{1\ \text{ft}}{12\ \text{in}}} = \mathbf{5.18\ ft/s}$$

1.39 $$\text{ERA} = \frac{39\ \text{runs}}{141\ \text{innings}} \times \frac{9\ \text{innings}}{\text{game}} = \mathbf{2.49\ runs/game}$$

1.40 $$\frac{3.12\ \text{runs}}{\text{game}} \times \frac{1\ \text{game}}{9\ \text{innings}} \times 150\ \text{innings} = \mathbf{52\ runs}$$

1.41 $$40\ \text{runs} \times \frac{1\ \text{game}}{2.79\ \text{runs}} \times \frac{9\ \text{innings}}{\text{game}} = \mathbf{129\ innings}$$

1.42 $$\text{ERA} = \frac{49\ \text{runs}}{123\ \text{innings}} \times \frac{9\ \text{innings}}{\text{game}} = \mathbf{3.59\ runs/game}$$

The definition of pressure

1.43 $p = F/A = 2500\ \text{lb}/[\pi(3.00\ \text{in})^2/4] = \mathbf{354\ lb/in^2 = 354\ psi}$

1.44 $p = F/A = 8700\ \text{lb}/[\pi(1.50\ \text{in})^2/4] = \mathbf{4923\ psi}$

1.45 $$p = \frac{F}{A} = \frac{12.0\ \text{kN}}{\pi(75\ \text{mm})^2/4} \times \frac{10^3\ \text{N}}{\text{kN}} \times \frac{(10^3\ \text{mm})^2}{\text{m}^2} = 2.72 \times 10^6\ \frac{\text{N}}{\text{m}^2} = \mathbf{2.72\ MPa}$$

1.46 $$p = \frac{F}{A} = \frac{38.8 \times 10^3\ \text{N}}{\pi(40\ \text{mm})^2/4} \times \frac{(10^3\ \text{mm})^2}{\text{m}^2} = 30.9 \times 10^6\ \frac{\text{N}}{\text{m}^2} = \mathbf{30.9\ MPa}$$

1.47 $$p = \frac{F}{A} = \frac{6000\ \text{lb}}{\pi(8.0\ \text{in})^2/4} = \mathbf{119\ psi}$$

1.48 $$p = \frac{F}{A} = \frac{18000\ \text{lb}}{\pi(2.50\ \text{in})^2/4} = \mathbf{3667\ psi}$$

1.49 $$F = pA = \frac{20.5 \times 10^6\ \text{N}}{\text{m}^2} \times \frac{\pi(50\ \text{mm})^2}{4} \times \frac{1\ \text{m}^2}{(10^3\ \text{mm})^2} = \mathbf{40.25\ kN}$$

1.50 $$F = pA = (6000\ \text{lb/in}^2)\left(\pi[2.00\ \text{in}]^2/4\right) = \mathbf{18850\ lb}$$

1.51 $$p = \frac{F}{A} = \frac{F}{\pi D^2/4} = \frac{4F}{\pi D^2}\text{: Then } D = \sqrt{\frac{4F}{\pi p}}$$

$$D = \sqrt{\frac{4(20000\ \text{lb})}{\pi(5000\ \text{lb/in}^2)}} = \mathbf{2.26\ in}$$

1.52 $$D = \sqrt{\frac{4F}{\pi p}} = \sqrt{\frac{4(30 \times 10^3\ \text{N})}{\pi(15.0 \times 10^6\ \text{N/m}^2)}} = 50.5 \times 10^{-3}\ \text{m} = \mathbf{50.5\ mm}$$

1.53 $F = pA = \frac{p[\pi D^2]}{4} = \frac{500\ \text{lb}(\pi)(D\ \text{in})^2}{\text{in}^2\ 4} = \mathbf{392.7\ D^2\ lb}$

***D*(in)**	***D*²(in²)**	***F*(lb)**
1.00	1.00	393
2.00	4.00	1571
3.00	9.00	3534
4.00	16.00	6283
5.00	25.00	9817
6.00	36.00	14137
7.00	49.00	19242
8.00	64.00	25133

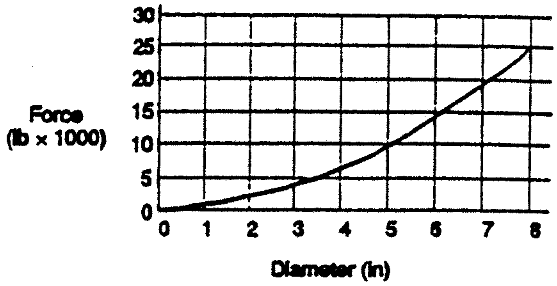

1.54 $p = \frac{F}{A} = \frac{F}{\pi D^2/4} = \frac{4F}{\pi D^2} = \frac{4(5000\ \text{lb})}{\pi(D\ \text{in})^2} = \frac{6366}{D^2}\ \text{psi}$

***D*(in)**	***D*²(in²)**	***p*(psi)**
1.00	1.00	6366
2.00	4.00	1592
3.00	9.00	707
4.00	16.00	398
5.00	25.00	255
6.00	36.00	177
7.00	49.00	130
8.00	64.00	99

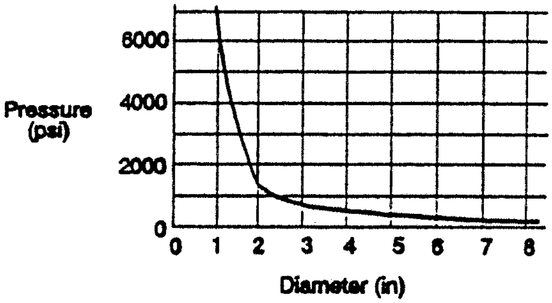

1.55 (Variable Answers) Example: $w = 160\ \text{lb}\ (4.448\ \text{N/lb}) = \mathbf{712\ N}$

$$p = \frac{F}{A} = \frac{712\ \text{N}}{\pi(20\ \text{mm})^2/4} \times \frac{(10^3\ \text{mm})^2}{\text{m}^2} = 2.77 \times 10^6\ \text{Pa} = \mathbf{2.27\ MPa}$$

$p = 2.27 \times 10^6\ \text{Pa}\ (1\ \text{psi}/6895\ \text{Pa}) = \mathbf{329\ psi}$

1.56 (Variable Answers) using $p = 2.27$ MPa

$F = pA = (2.27 \times 10^6\ \text{N/m}^2)(\pi(0.250\ \text{m})^2/4) = 111 \times 10^3\ \text{N} = \mathbf{111\ kN}$

$F = 111\ \text{kN}\ (1\ \text{lb}/4.448\ \text{N}) = \mathbf{25050\ lb}$

Bulk modulus

1.57 $\Delta p = -E(\Delta V/V) = -130000 \text{ psi}(-0.01) = \mathbf{1300\ psi}$
$\Delta p = -896 \text{ MPa}(-0.01) = \mathbf{8.96\ MPa}$

1.58 $\Delta p = -E(\Delta V/V) = -3.59 \times 10^6 \text{ psi}(-0.01) = \mathbf{35900\ psi}$
$\Delta p = -24750 \text{ MPa}(-0.01) = \mathbf{247.5\ MPa}$

1.59 $\Delta p = -E(\Delta V/V) = -189000 \text{ psi}(-0.01) = \mathbf{1890\ psi}$
$\Delta p = -1303 \text{ MPa}(-0.01) = \mathbf{13.03\ MPa}$

1.60 $\Delta V/V = -0.01$; $\Delta V = 0.01V = 0.01$ AL
Assume area of cylinder does not change.
$\Delta V = A(\Delta L) = 0.01$ AL
Then $\Delta L = 0.01$ L $= 0.01(12.00 \text{ in}) = \mathbf{0.120\ in}$

1.61 $$\frac{\Delta V}{V} = \frac{-p}{E} = \frac{-3000 \text{ psi}}{189000 \text{ psi}} = -0.0159 = \mathbf{-1.59\%}$$

1.62 $$\frac{\Delta V}{V} = \frac{-20.0 \text{ MPa}}{1303 \text{ MPa}} = -0.0153 = \mathbf{-1.53\%}$$

1.63 Stiffness = Force/Change in Length = $F/\Delta L$
Bulk Modulus = $E = \dfrac{-p}{\Delta V/V} = \dfrac{-pV}{\Delta V}$
But $p = F/A$; $V = AL$; $\Delta V = -A(\Delta L)$
$$E = \frac{-F}{A} \times \frac{AL}{-A(\Delta L)} = \frac{FL}{A(\Delta L)}$$
$$\frac{F}{(\Delta L)} = \frac{EA}{L} = \frac{189000 \text{ lb}\, \pi(0.5 \text{ in})^2}{\text{in}^2(42 \text{ in})4} = \mathbf{884\ lb/in}$$

1.64 $$\frac{F}{(\Delta L)} = \frac{EA}{L} = \frac{189000 \text{ lb}\, \pi(0.5 \text{ in})^2}{\text{in}^2(10.0 \text{ in})(4)} = \mathbf{3711\ lb/in}$$ **4.2 times higher**

1.65 $$\frac{F}{(\Delta L)} = \frac{EA}{L} = \frac{189000 \text{ lb}\, \pi(2.00 \text{ in})^2}{\text{in}^2(42.0 \text{ in})(4)} = \mathbf{14137\ lb/in}$$ **16 times higher**

1.66 Use large diameter cylinders and short strokes.

Force and mass

1.67 $$m = \frac{w}{g} = \frac{610 \text{ N}}{9.81 \text{ m/s}^2} \times \frac{1 \text{ kg} \cdot \text{m/s}^2}{\text{N}} = \mathbf{62.2\ kg}$$

1.68 $m = \frac{w}{g} = \frac{1.35 \times 10^3\ \text{N}}{9.81\ \text{m/s}^2} \times \frac{1\ \text{kg} \cdot \text{m/s}^2}{\text{N}}$ = **138 kg**

1.69 $w = mg$ = 825 kg × 9.81 m/s^2 = 8093 kg·m/s^2 = **8093 N**

1.70 $w = mg = 450\ \text{g} \times \frac{1\ \text{kg}}{10^3\ \text{g}} \times 9.81\ \text{m/s}^2 = 4.41\ \text{kg} \cdot \text{m/s}^2$ = **4.41 N**

1.71 $m = \frac{w}{g} = \frac{7.8\ \text{lb}}{32.2\ \text{ft/s}^2} = 0.242\ \frac{\text{lb} \cdot \text{s}^2}{\text{ft}}$ = **0.242 slugs**

1.72 $m = \frac{w}{g} = \frac{42.0\ \text{lb}}{32.2\ \text{ft/s}^2}$ = **1.304 slugs**

1.73 $w = mg = 1.58\ \text{slugs} \times 32.2\ \text{ft/s}^2 \times \frac{1\ \text{lb} \cdot \text{s}^2/\text{ft}}{\text{slug}}$ = **50.9 lb**

1.74 $w = mg = 0.258\ \text{slugs} \times 32.2\ \text{ft/s}^2 \times \frac{1\ \text{lb} \cdot \text{s}^2/\text{ft}}{\text{slug}}$ = **8.31 lb**

1.75 $m = \frac{w}{g} = \frac{160\ \text{lb}}{32.2\ \text{ft/s}^2}$ = **4.97 slugs**

w = 160 lb × 4.448 N/lb = **712 N**

m = 4.97 slugs × 14.59 kg/slug = **72.5 kg**

1.76 $m = \frac{w}{g} = \frac{1.00\ \text{lb}}{32.2\ \text{ft/s}^2}$ = **0.0311 slugs**

m = 0.0311 slugs × 14.59 kg/slug = **0.453 kg**

w = 1.00 lb × 4.448 N/lb = **4.448 N**

1.77 $F = w = mg$ = 1000 kg × 9.81 m/s^2 = 9810 kg·m/s^2 = **9810 N**

1.78 F = 9810 N × 1.0 lb/4.448 N = **2205 lb**

1.79 (Variable Answers) See problem 1.75 for method.

Density, specific weight, and specific gravity

1.80 $\gamma_B = (sg)_B \gamma_w$ = (0.876)(9.81 kN/m^3) = **8.59 kN/m^3**

$\rho_B = (sg)_B \rho_w$ = (0.876)(1000 kg/m^3) = **876 kg/m^3**

1.81 $\rho = \frac{\gamma}{g} = \frac{12.02\ \text{N}}{\text{m}^3} \times \frac{\text{s}^2}{9.81\ \text{m}} \times \frac{1\ \text{kg} \cdot \text{m/s}^2}{\text{N}}$ = **1.225 kg/m^3**

1.82 $\gamma = \rho g = 1.964\ \text{kg/m}^3 \times 9.81\ \text{m/s}^2 \times \dfrac{1\ \text{N}}{1\ \text{kg}\cdot\text{m/s}^2} = \mathbf{19.27\ N/m^3}$

1.83 $\text{sg} = \dfrac{\gamma_o}{\gamma_w @ 4°\text{C}} = \dfrac{8.860\ \text{kN/m}^3}{9.81\ \text{kN/m}^3} = \mathbf{0.903\ at\ 5°C}$

$\text{sg} = \dfrac{\gamma_o}{\gamma_w @ 4°\text{C}} = \dfrac{8.483\ \text{kN/m}^3}{9.81\ \text{kN/m}^3} = \mathbf{0.865\ at\ 50°C}$

1.84 $\gamma = \dfrac{w}{V};\ V = \dfrac{w}{\gamma} = \dfrac{2.25\ \text{kN}}{130.4\ \text{kN/m}^3} = \mathbf{0.0173\ m^3}$

1.85 $V = AL = \pi D^2 L/4 = \pi(0.150\ \text{m})^2(0.100\ \text{m})/4 = 1.767 \times 10^{-3}\ \text{m}^3$

$\rho_o = \dfrac{m}{V} = \dfrac{1.56\ \text{kg}}{1.767 \times 10^{-3}\ \text{m}^3} = \mathbf{883\ kg/m^3}$

$\gamma_o = \rho_o g = 883\ \text{kg/m}^3 \times 9.81\ \text{m/s}^2 \times \dfrac{1\ \text{N}}{1\ \text{kg}\cdot\text{m/s}^2} = 8.66 \times \dfrac{10^3\ \text{N}}{\text{m}^3} = \mathbf{8.66\ \dfrac{kg}{m^3}}$

$\text{sg} = \rho_o/\rho_w\ @\ 4°\text{C} = 883\ \text{kg/m}^3/1000\ \text{kg/m}^3 = \mathbf{0.883}$

1.86 $\gamma = (\text{sg})(\gamma_w\ @\ 4°\text{C}) = 1.258(9.81\ \text{kN/m}^3) = 12.34\ \text{kN/m}^3 = w/V$

$w = \gamma V = (12.34\ \text{kN/m}^3)(0.50\ \text{m}^3) = \mathbf{6.17\ kN}$

$m = \dfrac{w}{g} = \dfrac{6.17\ \text{kN}}{9.81\ \text{m/s}^2} \times \dfrac{10^3\ \text{N}}{\text{kN}} \times \dfrac{1\ \text{kg}\cdot\text{m/s}^2}{\text{N}} = \mathbf{629\ kg}$

1.87 $w = \gamma V = (\text{sg})(\gamma_w)(V) = (0.68)(9.81\ \text{kN/m}^3)(0.095\ \text{m}^3) = 0.634\ \text{kN} = \mathbf{634\ N}$

1.88 $\gamma = \rho g = (1200\ \text{kg/m}^3)(9.81\ \text{m/s}^2)\left(\dfrac{1\ \text{N}}{\text{kg}\cdot\text{m/s}^2}\right) = \mathbf{11.77\ kN/m^3}$

$\text{sg} = \dfrac{\rho}{\rho_w @ 4°\text{C}} = \dfrac{1200\ \text{kg/m}^3}{1000\ \text{kg/m}^3} = \mathbf{1.20}$

1.89 $V = \dfrac{w}{\gamma} = \dfrac{22.0\ \text{N}}{(0.826)(9.81\ \text{kN/m}^3)} \times \dfrac{1\ \text{kN}}{10^3\ \text{N}} = \mathbf{2.72 \times 10^{-3}\ m^3}$

1.90 $\gamma = \rho g = \dfrac{1080\ \text{kg}}{\text{m}^3} \times \dfrac{9.81\ \text{m}}{\text{s}^2} \times \dfrac{1\ \text{N}}{1\ \text{kg}\cdot\text{m/s}^2} \times \dfrac{1\ \text{kN}}{10^3\ \text{N}} = \mathbf{10.59\ kN/m^3}$

$\text{sg} = \rho/\rho_w = \dfrac{1080\ \text{kg/m}^3}{1000\ \text{kg/m}^3} = \mathbf{1.08}$

1.91 $\rho = (\text{sg})(\rho_w) = (0.789)(1000\ \text{kg/m}^3) = \mathbf{789\ kg/m^3}$

$\gamma = (\text{sg})(\gamma_w) = (0.789)(9.81\ \text{kN/m}^3) = \mathbf{7.74\ kN/m^3}$

1.92 $w_o = 35.4\text{ N} - 2.25\text{ N} = 33.15\text{ N}$

$V_o = Ad = (\pi D^2/4)(d) = \pi(.150\text{ m})^2(.20\text{ m})/4 = 3.53 \times 10^{-3}\text{ m}^3$

$$\gamma_o = \frac{w}{V} = \frac{33.15\text{ N}}{3.53\times10^{-3}\text{ m}^3} = 9.38\times10^3\text{ N/m}^3 = \mathbf{9.38\text{ kN/m}^3}$$

$$\text{sg} = \frac{\gamma_o}{\gamma_w} = \frac{9.38\text{ kN/m}^3}{9.81\text{ kN/m}^3} = \mathbf{0.956}$$

1.93 $V = Ad = (\pi D^2/4)(d) = \pi(10\text{ m})^2(6.75\text{ m})/4 = 530.1\text{ m}^3$

$w = \gamma V = (0.68)(9.81\text{ kN/m}^3)(530.1\text{ m}^3) = 3.536 \times 10^3\text{ kN} = \mathbf{3.536\text{ MN}}$

$m = \rho V = (0.68)(1000\text{ kg/m}^3)(530.1\text{ m}^3) = 360.5 \times 10^3\text{ kg} = \mathbf{360.5\text{ Mg}}$

1.94 $w_{castor\ oil} = \gamma_{co} \cdot V_{co} = (9.42\text{ kN/m}^3)(0.02\text{ m}^3) = 0.1884\text{ kN}$

$$V_m = \frac{w}{\gamma_m} = \frac{0.1884\text{ kN}}{(13.54)(9.81\ \text{kN/m}^3)} = \mathbf{1.42 \times 10^{-3}\text{ m}^3}$$

1.95 $w = \gamma V = (2.32)(9.81\text{ kN/m}^3)(1.42 \times 10^{-4}\text{ m}^3) = 3.23 \times 10^{-3}\text{ kN} = \mathbf{3.23\text{ N}}$

1.96 $\gamma = (\text{sg})(\gamma_w) = 0.876(62.4\text{ lb/ft}^3) = \mathbf{54.7\text{ lb/ft}^3}$

$\rho = (\text{sg})(\rho_w) = 0.876(1.94\text{ slugs/ft}^3) = \mathbf{1.70\text{ slugs/ft}^3}$

1.97 $$\rho = \frac{\gamma}{g} = \frac{0.0765\text{ lb/ft}^3}{32.2\text{ ft/s}^2} \times \frac{1\text{ slug}}{1\text{ lb}\cdot\text{s}^2/\text{ft}} = \mathbf{2.38 \times 10^{-3}\text{ slugs/ft}^3}$$

1.98 $$\gamma = \rho g = 0.00381\text{ slug/ft}^3(32.2\text{ ft/s}^2)\frac{1\text{ lb}\cdot\text{s}^2/\text{ft}}{\text{slug}} = \mathbf{0.1227\text{ lb/ft}^3}$$

1.99 $\text{sg} = \gamma_o/(\gamma_w\ @\ 4°\text{C}) = 56.4\text{ lb/ft}^3/62.4\text{ lb/ft}^3 = \mathbf{0.904\text{ at }40°\text{F}}$

$\text{sg} = \gamma_o/(\gamma_w\ @\ 4°\text{C}) = 54.0\text{ lb/ft}^3/62.4\text{ lb/ft}^3 = \mathbf{0.865\text{ at }120°\text{F}}$

1.100 $V = w/\gamma = 500\text{ lb}/834\text{ lb/ft}^3 = \mathbf{0.600\text{ ft}^3}$

1.101 $$\gamma = \frac{w}{V} = \frac{7.50\text{ lb}}{1\text{ gal}} \times \frac{7.48\text{ gal}}{\text{ft}^3} = \mathbf{56.1\text{ lb/ft}^3}$$

$$\rho = \frac{\gamma}{g} = \frac{56.1\text{ lb/ft}^3}{32.2\text{ ft/s}^2} = 1.74\frac{\text{lb}\cdot\text{s}^2}{\text{ft}^4} = \mathbf{1.74\text{ slugs/ft}^3}$$

$$\text{sg} = \frac{\gamma_o}{\gamma_w\ @4°\text{C}} = \frac{5.61\text{ lb/ft}^3}{62.4\text{ lb/ft}^3} = \mathbf{0.899}$$

1.102 $$w = \gamma V = (1.258)\frac{(62.4\text{ lb})}{\text{ft}^3}(50\text{ gal})\frac{(1\text{ ft}^3)}{7.48\text{ gal}} = \mathbf{525\text{ lb}}$$

1.103 $$w = \gamma V = \rho g V = \frac{1.32\text{ lb}\cdot\text{s}^2}{\text{ft}^4} \times \frac{32.2\text{ ft}}{\text{s}^2} \times 25.0\text{ gal} \times \frac{1\text{ ft}^3}{7.48\text{ gal}} = \mathbf{142\text{ lb}}$$

1.104 $$sg = \frac{\rho}{\rho_w} = \frac{1.20\text{ g}}{\text{cm}^3} \times \frac{\text{m}^3}{1000\text{ kg}} \times \frac{1\text{ kg}}{10^3\text{ g}} \times \frac{(10^2\text{ cm})^3}{\text{m}^3} = \mathbf{1.20}$$

$\rho = (sg)(\rho_w) = 1.20(1.94\text{ slugs/ft}^3) = \mathbf{2.33\ slugs/ft^3}$

$\gamma = (sg)(\gamma_w) = (1.20)(62.4\text{ lb/ft}^3) = \mathbf{74.9\ lb/ft^3}$

1.105 $$V = \frac{w}{\gamma} = \frac{5.0\text{ lb ft}^3}{(0.826)62.4\text{ lb}} \times \frac{0.0283\text{ m}^3}{\text{ft}^3} \times \frac{(10^2\text{ cm})^3}{\text{m}^3} = \mathbf{2745\ cm^3}$$

1.106 $\gamma = (sg)(\gamma_w) = (1.08)(62.4\text{ lb/ft}^3) = \mathbf{67.4\ lb/ft^3}$

1.107 $\rho = (0.79)(1.94\text{ slugs/ft}^3) = \mathbf{1.53\ slugs/ft^3}$; $\mathbf{\rho = 0.79\ g/cm^3}$

1.108 $$\gamma_o = \frac{w}{V} = \frac{(7.95 - 0.50)\text{ lb}}{\left(\pi(6.0\text{ in})^2/4\right)(8.0\text{ in})} \times \frac{1728\text{ in}^3}{\text{ft}^3} = \mathbf{56.9\ lb/ft^3}$$

$sg = \gamma_o/\gamma_w = 56.9\text{ lb/ft}^3/62.4\text{ lb/ft}^3 = \mathbf{0.912}$

1.109 $$V = A \cdot d = \frac{\pi D^2}{4} \cdot d = \frac{\pi(30\text{ ft})^2}{4} \times 22\text{ ft} = 15550\text{ ft}^3 \times 7.48\text{ gal/ft}^3 = \mathbf{1.16 \times 10^5\ gal}$$

$w = \gamma V = (0.68)(62.4\text{ lb/ft}^3)(15550\text{ ft}^3) = \mathbf{6.60 \times 10^5\ lb}$

1.110 $w_{co} = \gamma_{co}V = (59.69\text{ lb/ft}^3)(5\text{ gal})(1\text{ ft}^3/7.48\text{ gal}) = \mathbf{39.90\ lb}$

$$V_m = \frac{w}{\gamma_m} = \frac{39.90\text{ lb ft}^3}{13.54(62.4\text{ lb})} \times \frac{7.48\text{ gal}}{\text{ft}^3} = \mathbf{0.353\ gal}$$

1.111 $$w = \gamma V = (2.32)\frac{(62.4\text{ lb})}{\text{ft}^3}(8.64\text{ in}^3)\frac{(1\text{ ft}^3)}{1728\text{ in}^3} = \mathbf{0.724\ lb}$$

CURVE FIT FOR THE PROPERTIES OF WATER VS. TEMPERATURE
TABLE A.1

Temp.	Sp Wt	Density	Computed Sp Wt	% Diff	Computed Density	%Diff
0	9.81	1000	9.811	0.002	1000.2	0.020
5	9.81	1000	9.812	0.018	1000.2	0.017
10	9.81	1000	9.809	0.012	999.8	-0.015
15	9.81	1000	9.803	-0.017	999.2	-0.075
20	9.79	998	9.794	0.045	998.4	0.039
25	9.78	997	9.783	0.028	997.3	0.029
30	9.77	996	9.769	-0.015	996.0	-0.002
35	9.75	994	9.752	0.022	994.5	0.047
40	9.73	992	9.734	0.037	992.8	0.077
45	9.71	990	9.713	0.032	990.9	0.090
50	9.69	988	9.691	0.007	988.9	0.088
55	9.67	986	9.667	-0.035	986.7	0.072
60	9.65	984	9.641	-0.096	984.4	0.042
65	9.62	981	9.613	-0.070	982.0	0.103
70	9.59	978	9.584	-0.061	979.5	0.154
75	9.56	975	9.553	-0.069	976.9	0.195
80	9.53	971	9.521	-0.097	974.2	0.331
85	9.50	968	9.486	-0.144	971.5	0.357
90	9.47	965	9.450	-0.211	968.6	0.376
95	9.44	962	9.411	-0.302	965.7	0.388
100	9.40	958	9.371	-0.312	962.8	0.500

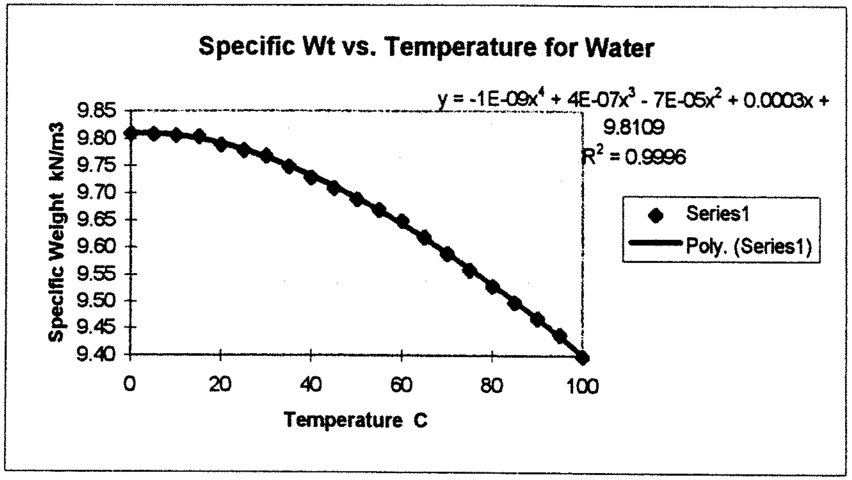

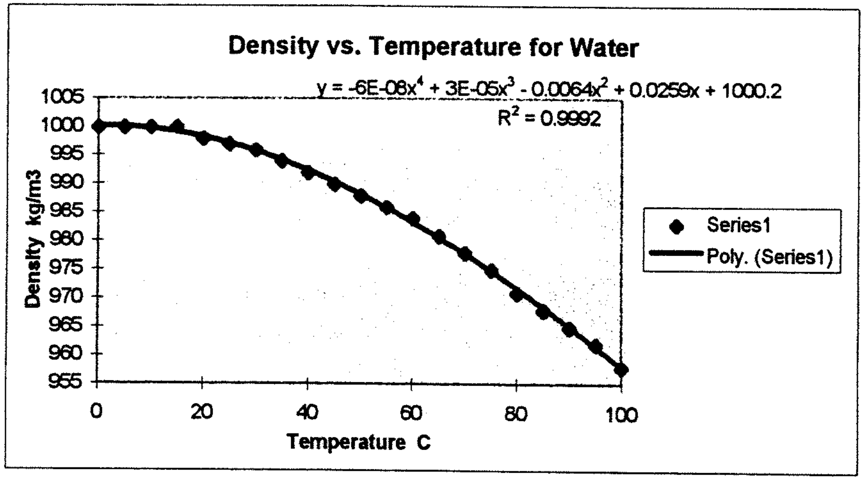

Computer Assignment 2: Sample Output - Equations for Specific Weight and Density versus Temperature are shown within the plots of the output.

CHAPTER TWO

VISCOSITY OF FLUIDS

2.1 Shearing stress is the force required to slide one unit area layer of a substance over another.

2.2 Velocity gradient is a measure of the velocity change with position within a fluid.

2.3 Dynamic viscosity = shearing stress/velocity gradient.

2.4 Oil. It pours very slowly compared with water. It takes a greater force to stir the oil, indicating a higher shearing stress for a given velocity gradient.

2.5 $N \cdot s/m^2$ or $Pa \cdot s$

2.6 $lb \cdot s/ft^2$

2.7 1 poise = 1 $dyne \cdot s/cm^2$ = 1 $g/(cm \cdot s)$

2.8 It does not conform to the standard SI system. It uses obsolete basic units of dynes and cm.

2.9 Kinematic viscosity = dynamic viscosity/density of the fluid.

2.10 m^2/s

2.11 ft^2/s

2.12 1 stoke = 1 cm^2/s

2.13 It does not conform to the standard SI system. It uses obsolete basic unit of cm.

2.14 A newtonian fluid is one for which the dynamic viscosity is independent of the velocity gradient.

2.15 A nonnewtonian fluid is one for which the dynamic viscosity **is** dependent on the velocity gradient.

2.16 Water, oil, gasoline, alcohol, kerosene, benzene, and others.

2.17 Blood plasma, molten plastics, catsup, paint, and others.

2.18 6.5×10^{-4} Pa·s

2.19 1.5×10^{-3} Pa·s

2.20 2.0×10^{-5} Pa·s

2.21 1.1×10^{-5} Pa·s

2.22 3.0×10^{-1} Pa·s

2.23 1.90 Pa·s

2.24 3.2×10^{-5} lb·s/ft^2

2.25 8.9×10^{-6} lb·s/ft^2

2.26 3.6×10^{-7} lb·s/ft^2

2.27 1.9×10^{-7} lb·s/ft^2

2.28 5.0×10^{-2} lb·s/ft^2

2.29 4.1×10^{-3} lb·s/ft^2

2.30 3.3×10^{-5} lb·s/ft^2

2.31 2.8×10^{-5} lb·s/ft^2

2.32 2.1×10^{-3} lb·s/ft^2

2.33 9.5×10^{-5} lb·s/ft^2

2.34 1.3×10^{-2} lb·s/ft^2

2.35 2.2×10^{-4} lb·s/ft^2

2.36 Viscosity index is a measure of how greatly the viscosity of a fluid changes with temperature.

2.37 High viscosity index (VI).

2.38 Rotating drum viscometer.

2.39 The fluid occupies the small radial space between the stationary cup and the rotating drum. Therefore, the fluid in contact with the cup has a zero velocity while that in contact with the drum has a velocity equal to the surface speed of the drum.

2.40 A meter measures the torque required to drive the rotating drum. The torque is a function of the drag force on the surface of the drum which is a function of the shear stress in the fluid. Knowing the shear stress and the velocity gradient, Equation 2-2 is used to compute the dynamic viscosity.

2.41 The inside diameter of the capillary tube; the velocity of fluid flow; the length between pressure taps; the pressure difference between the two points a distance L apart.
See Eq. (2-4).

2.42 Terminal velocity is that velocity achieved by the sphere when falling through the fluid when the downward force due to gravity is exactly balanced by the buoyant force and the drag force on the sphere. The drag force is a function of the dynamic viscosity.

2.43 The diameter of the ball; the terminal velocity (usually by noting distance traveled in a given time); the specific weight of the fluid; the specific weight of the ball.

2.44 The Saybolt viscometer employs a container in which the fluid can be brought to a known, controlled temperature, a small standard orifice in the bottom of the container and a calibrated vessel for collecting a 60 mL sample of the fluid. A stopwatch or timer is required to measure the time required to collect the 60 mL sample.

2.45 No. The time is reported as Saybolt Universal Seconds and is a relative measure of viscosity.

2.46 Kinematic viscosity.

2.47 Standard calibrated glass capillary viscometer.

2.48 See Table 2.4. The kinematic viscosity of SAE 20 oil must be between 5.6 and 9.3 cSt at 100°C using ASTM D 445. Its dynamic viscosity must be over 2.6 cP at 150°C using ASTM D 4683, D 4741, or D 5481. The kinematic viscosity of SAE 20W oil must be over 5.6 cSt at 100°C using ASTM D 445. Its dynamic viscosity for cranking must be below 9500 cP at −15°C using ASTM D 5293. For pumping it must be below 60,000 cP at −20°C using ASTM D 4684.

2.49 SAE 0W through SAE 250 depending on the operating environment. See Table 2.4.

2.50 SAE 70W through SAE 60 depending on the operating environment and loads. See Table 2.5.

2.51 100°C using ASTM D 445 testing method and at 150° C using ASTM D 4683, D 4741, or D 5481.

2.52 At −25°C using ASTM D 5293; at −30°C using ASTM D 4684; at 100°C using ASTM D 445.

2.53 See Table 2.4. The kinematic viscosity of SAE 5W-40 oil must be between 12.5 and 16.3 cSt at 100°C using ASTM D 445. Its dynamic viscosity must be over 2.9 cP at 150°C using ASTM D 4683, D 4741, or D 5481. The kinematic viscosity must be over 3.8 cSt at 100°C using ASTM D 445. Its dynamic viscosity for cranking must be below 6600 cP at −30°C using ASTM D 5293. For pumping it must be below 60 000 cP at −35°C using ASTM D 4684.

2.54 ν = SUS/4.632 = 500/4.632 = 107.9 mm^2/s = 107.9×10^{-6} m^2/s
$\nu = 107.9 \times 10^{-6}$ m^2/s [(10.764 ft^2/s)/(m^2/s)] = 1.162×10^{-3} ft^2/s

2.55 SAE 10W-30 engine oil:

Low temperature cranking viscosity at −25°C: 7000 cP = 7000 mPa s = **7.0 Pa·s maximum**
Low temperature pumping viscosity at −30°C: 60 000 cP = 60 000 mPa s = **60 Pa·s maximum**
Low shear rate kinematic viscosity at 100°C: 9.3 cSt = 9.3 mm^2/s = **9.3×10^{-6} $m^2/2$ minimum**
Low shear rate kinematic viscosity at 100°C: 12.5 cSt = 12.5 mm^2/s = **12.5×10^{-6} $m^2/2$ maximum**
High shear rate dynamic viscosity at 150°C: 2.9 cP = 2.9 mPa s = **0.0029 Pa·s minimum**

2.56 $\eta = 4500$ cP [(1 Pa·s)/(1000 cP)] = **4.50 Pa·s**
$\eta = 4.50$ Pa·s [(1 lb·s/ft^2)/(47.88 Pa·s)] = **0.0940 lb·s/ft^2**

2.57 $v = 5.6$ cSt [(1 m^2/s)/(10^6 cSt)] = **5.60 × 10^{-6} m^2/s**
$v = 5.60 \times 10^{-6}$ m^2/s [(10.764 ft^2/s)/(m^2/s)] = **6.03 × 10^{-5} ft^2/s**

2.58 From Figure 2.12: $v = 15.5$ mm^2/s = 15.5×10^{-6} m^2/s

2.59 $\eta = 6.5 \times 10^{-3}$ Pa·s [(1 lb·s/ft^2)/(47.88 Pa·s)] = **1.36 × 10^{-4} lb·s/ft^2**

2.60 $\eta = 0.12$ poise [(1 Pa·s)/(10 poise)] = 0.012 Pa·s = 1.2×10^{-2} Pa·s. **SAE 10 oil**

2.61

$$\eta = \frac{(\gamma_s - \gamma_f)D^2}{18\upsilon} \quad \text{(Eq. 2-9)}$$

$\gamma_f = 0.94(9.81$ kN/m$^3) = 9.22$ kN/m^3
$D = 1.6$ mm $= 1.6 \times 10^{-3}$ m

$v = s/t = .250$ m/10.4 s $= 2.40 \times 10^{-2}$ m/s

$$\mu = \frac{(77.0 - 9.22)\text{kN}(1.6\times10^{-3}\text{m})^2}{18\ \text{m}^3(2.40\times10^{-2}\ \text{m/s})}\times\frac{10^3\ \text{N}}{\text{kN}} = 0.402\frac{\text{N}\cdot\text{s}}{\text{m}^2} = \mathbf{0.402\ Pa\cdot s}$$

2.62

$$\eta = \frac{(p_1 - p_2)D^2}{32\upsilon L} \quad \text{(Eq. 2-4)}$$

Use $\gamma_{\text{Mercury}} = 132.8$ kN/m^3 (App. B)
$\gamma_o = 0.90(9.81$ kN/m$^3) = 8.83$ kN/m^3

Manometer Eq. using principles of Chapter 3:

$$p_1 + \gamma_o y + \gamma_o h - \gamma_m h - \gamma_o y = p_2$$

$$p_1 - p_2 = \gamma_m h - \gamma_o h = h(\gamma_m - \gamma_o) = 0.177\ \text{m}(132.8 - 8.83)\frac{\text{kN}}{\text{m}^3} = 21.94\frac{\text{kN}}{\text{m}^2}$$

$$\eta = \frac{(21.94\ \text{kN/m}^2)(0.0025\ \text{m})^2}{32(1.58\ \text{m/s})(0.300\ \text{m})} = 9.04\times10^{-6}\frac{\text{kN}\cdot\text{s}}{\text{m}^2}\times\frac{10^3\ \text{N}}{\text{kN}} = \mathbf{9.04\times10^{-3}\ Pa\cdot s}$$

2.63 See Prob. 2.61. $\gamma_f = 0.94(62.4$ lb/ft$^3) = 58.7$ lb/ft^3: $D = (0.063$ in)(1 ft/12 in) = 0.00525 ft
$v = s/t = (10.0$ in/10.4 s)(1 ft/12 in) = 0.0801 ft/s: $\gamma_s = (0.283$ lb/in^3)(1728 in^3/ft^3) = 489 lb/ft^3

$$\eta = \frac{(\gamma_s - \gamma_f)D^2}{18v} = \frac{(489 - 58.7)\text{lb/ft}^3(0.00525\ \text{ft})^2}{32(4.82\ \text{ft/s})} = 0.00207\ \text{lb s/ft}^2 = 2.07\times10^{-4}\ \text{lb}\cdot\text{s/ft}^2$$

2.64 See Problem 2.62. Use $\gamma_m = 844.9$ lb/ft^3 (App. B): $\gamma_o = (0.90)(62.4$ lb/ft$^3) = 56.16$ lb/ft^3
$h = (7.00$ in)(1 ft/12 in) = 0.5833 ft: $D = (0.100$ in)(1 ft/12 in) = 0.00833 ft
$p_1 - p_2 = h(\gamma_m - \gamma_o) = (0.5833$ ft)(844.9 – 56.16) lb/ft^3 = 460.1 lb/ft^2

$$\eta = \frac{(p_1 - p_2)D^2}{32vL} = \frac{(460.1\ \text{lb/ft}^2)(0.00833\ \text{ft})^2}{32(4.82\ \text{ft/s})(1.0\ \ \text{ft})} = 0.000207\ \text{lb s/ft}^2 = 2.07\times10^{-4}\ \text{lb}\cdot\text{s/ft}^2$$

2.65 From Fig. 2.12, kinematic viscosity = 78.0 SUS

2.66 From Fig 2.12, kinematic viscosity = 257 SUS

2.67 ν = 4.632(188) = 871 SUS

2.68 ν = 4.632(244) = 1130 SUS

2.69 From Fig. 2.13, A = 0.996. At 100°F, ν = 4.632(153) = 708.7 SUS.
At 40°F, ν = 0.996(708.7) = 706 SUS

2.70 From Fig. 2.13, A = 1.006. At 100°F, ν = 4.632(205) = 949.6 SUS.
At 190°F, ν = 1.006(949.6) = 955 SUS

2.71 ν = 6250/4.632 = 1349 mm^2/s

2.72 ν = 438/4.632 = 94.6 mm^2/s

2.73 From Fig. 2.12, ν = 12.5 mm^2/s

2.74 From Fig 2.12, ν = 37.5 mm^2/s

2.75 t = 80°C = 176°F. From Fig. 2.13, A = 1.005. At 100°F, ν = 4690/4.632 = 1012.5 mm^2/s.
At 176°F (80°C): ν = 1.005(1012.5) = 1018 mm^2/s.

2.76 t = 40°C = 104°F. From Fig. 2.13, A = 1.00. At 100°F, ν = 526/4.632 = 113.6 mm^2/s.
At 176°F (80°C): ν = 1.000(113.6) = 113.6 mm^2/s.

Kinematic Viscosity Conversions

Problem 2.77

SAE Viscosity Grades - Engine Oils				
	Kinematic Viscosity at 100 deg C			
	(mm²/s)		SUS	
SAE No.	Min	Max	Min	Max
0W	3.8	---	38.9	---
5W	3.8	---	38.9	---
10W	4.1	---	39.8	---
15W	5.6	---	44.6	---
20W	5.6	---	44.6	---
25W	9.3	---	56.8	---
20	5.6	9.3	44.6	56.8
30	9.3	12.5	56.8	68.3
40	12.5	16.3	68.3	83.2
50	16.3	21.9	83.2	106.6
60	21.9	26.1	106.6	125.1

Conversion method for both Problem 2.77 and 2.78:
Used method from Section 2.7.5 in the text.
1: 100 deg C = 212 deg F.
S: From Fig. 2.13, A = 1.007
3: Read SUS for 100 deg F from Fig. 2.12.
4: Multiply *A* times SUS at 100 deg F to get SUS at 100 deg C (212 deg F)

Example: Given minimum kinematic viscosity = 21.9 mm²/s for SAE 60
Read SUS at 100 deg F = 105.9 from Fig. 2.12
SUS at 100 deg C (212 deg F) = 1.007(105.9) = 106.6 SUS

NOTE: Results reported here used tabular values from ASTM 2161. Values read from Fig. 2.12 may vary because of precision of graph or reading of values from scale.

Problem 2.78 **(See Problem 2.77 for method.)**

SAE Viscosity Grades - Automotive Gear Lubricants				
	Kinematic Viscosity at 100 deg C			
	(mm²/s)		SUS	
SAE No.	Min	Max	Min	Max
70W	4.1	---	39.8	---
75W	4.1	---	39.8	---
80W	7.0	---	49.1	---
85W	11.0	---	62.8	---
80	7.0	11.0	49.1	62.8
85	11.0	13.5	62.8	72.1
90	13.5	24.0	72.1	115.8
140	24.0	41.0	115.8	192.6
250	41.0	---	192.6	---

Kinematic Viscosity Conversions

Problem 2.79

ISO Viscosity Grades						
	Kinematic Viscosity at 40 deg C					
	(mm^2/s)			SUS		
ISO VG	Min	Nom	Max	Min	Nom	Max
2	1.98	2.2	2.40	32.5	33.3	34.0
3	2.88	3.2	3.52	35.6	36.6	37.6
5	4.14	4.6	5.06	39.6	41.1	42.6
7	6.12	6.8	7.48	46.0	48.1	50.3
10	9.00	10	11.0	55.4	58.8	62.4
15	13.5	15	16.5	71.6	77.4	83.4
22	19.8	22	24.2	97.0	106.3	115.9
32	28.8	32	35.2	136.2	150.5	164.9
46	41.4	46	50.6	193.1	214	235
68	61.2	68	74.8	284	315	347
100	90.0	100	110	417	463	510
150	135	150	165	625	695	764
220	198	220	242	917	1019	1121
320	288	320	352	1334	1482	1630
460	414	460	506	1918	2131	2344
680	612	680	748	2835	3150	3465
1000	900	1000	1100	4169	4632	5095
1500	1350	1500	1650	6253	6948	7643
2200	1980	2200	2420	9171	10190	11209
3200	2880	3200	3520	13340	14822	16305

Note: Method used is same as for Problem 2.77.
Temperature: t = 40 deg C = 104 deg F
From Fig. 2.13, A = 1.000
Therefore, SUS values are read directly from Fig. 2.12.

CHAPTER THREE

PRESSURE MEASUREMENT

Absolute and gage pressure

3.1 Pressure = force/area; $p = F/A$

3.2 Absolute pressure is measured relative to a perfect vacuum.

3.3 Gage pressure is measured relative to atmospheric pressure.

3.4 Atmospheric pressure is the absolute pressure in the local area.

3.5 $p_{abs} = p_{gage} + p_{atm}$

3.6 True.

3.7 False. Atmospheric pressure varies with altitude and with weather conditions.

3.8 False. Absolute pressure cannot be negative because a perfect vacuum is the reference for absolute pressure and a perfect vacuum is the lowest possible pressure.

3.9 True.

3.10 False. A gage pressure can be no lower than one atmosphere below the prevailing atmospheric pressure. On earth, the atmospheric pressure would never be as high as 150 kPa.

3.11 At 4000 ft, p_{atm} = 12.7 psia; from App. E by interpolation.

3.12 At 13,500 ft, p_{atm} = 8.84 psia; from App. E by interpolation.

3.13 Zero gage pressure.

3.14 $p_{gage} = 583 - 103 =$ **480 kPa(gage)**

3.15 $p_{gage} = 157 - 101 =$ **56 kPa(gage)**

3.16 $p_{gage} = 30 - 100 =$ **–70 kPa(gage)**

3.17 $p_{gage} = 74 - 97 =$ **–23 kPa(gage)**

3.18 $p_{gage} = 101 - 104 =$ **–3 kPa(gage)**

3.19 $p_{abs} = 284 + 100 =$ **384 kPa(abs)**

3.20 $p_{abs} = 128 + 98 =$ **226 kPa(abs)**

3.21 $p_{abs} = 4.1 + 101.3 =$ **105.4 kPa(abs)**

3.22 $p_{abs} = -29.6 + 101.3 =$ **71.7 kPa(abs)**

3.23 $p_{abs} = -86 + 99 =$ **13 kPa(abs)**

3.24 $p_{gage} = 84.5 - 14.9 =$ **69.6 psig**

3.25 $p_{gage} = 22.8 - 14.7 =$ **8.1 psig**

3.26 $p_{gage} = 4.3 - 14.6 =$ **–10.3 psig**

3.27 $p_{gage} = 10.8 - 14.0 =$ **–3.2 psig**

3.28 $p_{gage} = 14.7 - 15.1 =$ **–0.4 psig**

3.29 $p_{abs} = 41.2 + 14.5 =$ **55.7 psia**

3.30 $p_{abs} = 18.5 + 14.2 =$ **32.7 psia**

3.31 $p_{abs} = 0.6 + 14.7 =$ **15.3 psia**

3.32 $p_{abs} = -4.3 + 14.7 =$ **10.4 psia**

3.33 $p_{abs} = -12.5 + 14.4 =$ **1.9 psia**

Pressure-Elevation Relationship

3.34 $p = \gamma h = 1.08(9.81\ \text{kN/m}^3)(0.550\ \text{m}) = 5.83\ \text{kN/m}^2 =$ **5.83 kPa(gage)**

3.35 $p = \gamma h = (\text{sg})\gamma_w h : \text{sg} = p/\gamma_w h)$

$$\text{sg} = \frac{1.820\ \text{lb ft}^3}{\text{in}^2(62.4\ \text{lb})(4.0\ \text{ft})} \times \frac{144\ \text{in}^2}{\text{ft}^2} = \mathbf{1.05}$$

3.36 $$h = \frac{p}{\gamma} = \frac{52.75\ \text{kN m}^3}{\text{m}^2\ 7.87\ \text{kN}} = \mathbf{6.70\ m}$$

3.37 $$p = \gamma h = \frac{64.00\ \text{lb}}{\text{ft}^3} \times 12.50\ \text{ft} \times \frac{1\ \text{ft}^2}{144\ \text{in}^2} = \mathbf{5.56\ psig}$$

3.38 $$p = \gamma h = \frac{62.4\ \text{lb}}{\text{ft}^3} \times 50.0\ \text{ft} \times \frac{1\ \text{ft}^2}{144\ \text{in}^2} = \mathbf{21.67\ psig}$$

3.39 $p = \gamma h = (10.79\ \text{kN/m}^3)(3.0\ \text{m}) = 32.37\ \text{kN/m}^2 =$ **32.37 kPa(gage)**

3.40 $p = \gamma h = (10.79\ \text{kN/m}^3)(12.0\ \text{m}) =$ **129.5 kPa(gage)**

3.41 $p_{air} = p_A - \gamma_o(64\text{ in}) = 180\text{ psig} - (0.9)(62.4\text{ lb/ft}^3)(64\text{ in})(1\text{ ft}^3/1728\text{ in}^3)$
$p_{air} = 180\text{ psig} - 2.08\text{ psi} = \mathbf{177.9\text{ psig}}$

3.42 $p_i = \gamma h = (1.15)(9.81\text{ kN/m}^3)(0.375\text{ m}) = \mathbf{4.23\text{ kPa(gage)}}$

3.43 $p_{atm} = \mathbf{24.77\text{ kPa(abs)}}$ By interpolation - App. E: $\gamma_m = (13.54)9.81\text{ kN/m}^3$
$\gamma_m = 132.8\text{ kN/m}^3$
$p_B = p_{atm} + \gamma h = 24.77\text{ kPa} + (132.8\text{ kN/m}^3)(0.325\text{ m}) = \mathbf{67.93\text{ kPa(abs)}}$

3.44 $p = \gamma h = (0.95)(62.4\text{ lb/ft}^3)(28.5\text{ ft})(1\text{ ft}^2/144\text{ in}^2) = \mathbf{11.73\text{ psig}}$

3.45 $p = 50.0\text{ psig} + \gamma h = 50.0\text{ psig} + 11.73\text{ psi} = \mathbf{61.73\text{ psig}}$
(See 3.44 for $\gamma h = 11.73$ psig)

3.46 $$p = -10.8\text{ psig} + \gamma h = -10.8\text{ psig} + (0.95)\frac{(62.4\text{ lb})}{\text{ft}^3} \times 6.25\text{ ft} \times \frac{1\text{ ft}^2}{144\text{ in}^2}$$
$p = -10.8\text{ psig} + 2.57\text{ psi} = \mathbf{-8.23\text{ psig}}$

3.47 $$p_{top} + \gamma_o h = p_{bot} : h = \frac{p_{bot} - p_{top}}{\gamma_o}$$
$$h = \frac{(35.5 - 30.0)\text{ lb ft}^3}{\text{in}^2(0.95)(62.4\text{ lb})} \times \frac{144\text{ in}^2}{\text{ft}^2} = \mathbf{13.36\text{ ft}}$$

3.48 $0 + \gamma_o h_o + \gamma_w h_w = p_{bot}$
$$h_o = \frac{p_{bot} - \gamma_w h_w}{\gamma_o} = \frac{52.3\text{ kN/m}^2 - (9.81\text{ kN/m}^3)(2.80\text{ m})}{(0.86)(9.81\text{ kN/m}^3)} = \mathbf{2.94\text{ m}}$$

3.49 $0 + \gamma_o h_o + \gamma_w h_w = p_{bot}$
$$h_w = \frac{p_{bot} - \gamma_o h_o}{\gamma_w} = \frac{125.3\text{ kN/m}^2 - (0.86)(9.81\text{ kN/m}^3)(6.90\text{ m})}{9.81\text{ kN/m}^3} = \mathbf{6.84\text{ m}}$$

3.50 $0 + \gamma_o h_1 + \gamma_w h_2 = p_{bot}$; but $h_1 = 18.0 - h_2$
$\gamma_o(18 - h_2) + \gamma_w h_2 = p_{bot}$
$18\gamma_o - \gamma_o h_2 + \gamma_w h_2 = p_{bot} = h_2(\gamma_w - \gamma_o) + 18\gamma_o$
$$h_2 = \frac{p_{bot} - 18\gamma_o}{\gamma_w - \gamma_o} = \frac{158\text{ kN/m}^2 - (18\text{ m})(.86)(9.81\text{ kN/m}^3)}{[9.81 - (0.86)(9.81)]\text{kN/m}^3} = \mathbf{4.47\text{ m}}$$

3.51 $p = \gamma h = (1.80)(9.81\text{ kN/m}^3)(4.0\text{ m}) = 70.6\text{ kN/m}^2 = \mathbf{70.6\text{ kPa(gage)}}$

3.52 $p = \gamma h = (0.89)(62.4\text{ lb/ft}^3)(32.0\text{ ft})(1\text{ ft}^2/144\text{ in}^2) = \mathbf{12.34\text{ psig}}$

3.53 $p = \gamma h = (10.0\text{ kN/m}^3)(11.0 \times 10^3\text{ m}) = 110 \times 10^3\text{ kN/m}^2 = \mathbf{110\text{ MPa}}$

3.54 $\overset{0}{p_{atm}} + \gamma_m(.457\text{ m}) - \gamma_w(1.381\text{ m}) - \gamma_G(0.50\text{ m}) = p_{air}$
$p_{air} = (13.54)(9.81\text{ kN/m}^3)(.457\text{ m}) - (9.81\text{ kN/m}^3)(1.381\text{ m}) - (.68)(9.81)(.50)$
$p_{air} = (60.70 - 13.55 - 3.34)\text{ kN/m}^2 = \mathbf{43.81\text{ kPa(gage)}}$

3.55 $p_{bot} = -34.0 \text{ kPa} + \gamma_o h_o + \gamma_w h_w$

$= -34.0 \text{ kPa} + (0.85)(9.81 \text{ kN/m}^3)(0.50 \text{ m}) + (9.81 \text{ kN/m}^3)(0.75 \text{ m})$

$p_{bot} = -34.0 \text{ kPa} + 4.17 + 7.36 = \mathbf{-22.47\ kPa(gage)}$

3.56 $p_{bot} = p_{air} + \gamma_o h_o + \gamma_w h_w$

$= 200 \text{ kPa} + [(0.80)(9.81)(1.5) + (9.81)(2.6)]\text{kN/m}^2$

$p_{bot} = 200 + 11.77 + 25.51 = \mathbf{237.3\ kPa(gage)}$

Manometers (See text for answers to 3.57 to 3.61.)

3.62 $\overset{0}{\cancel{p_{atm}}} - \gamma_m(.075 \text{ m}) - \gamma_w(0.10 \text{ m}) = p_A$

$p_A = -(13.54)(9.81 \text{ kN/m}^3)(0.075 \text{ m}) - (9.81)(0.10) = \mathbf{-10.94\ kPa(gage)}$

3.63 $p_A + \gamma_o(13 \text{ in}) + \gamma_w(9 \text{ in}) - \gamma_o(32 \text{ in}) = p_B$

$$p_B - p_A = \gamma_w(9 \text{ in}) - \gamma_o(19 \text{ in}) = \frac{62.4 \text{ lb}}{\text{ft}^3} \times 9 \text{ in} \times \frac{1 \text{ ft}^3}{1728 \text{ in}^3} - \frac{(0.85)(62.4)(19)}{1728}$$

$\mathbf{p_B - p_A} = 0.325 \text{ psi} - 0.583 \text{ psi} = \mathbf{-0.258\ psi}$

3.64 $p_B - \gamma_w(33 \text{ in}) + \gamma_o(8 \text{ in}) + \gamma_w(13 \text{ in}) = p_A$

$$p_A - p_B = \gamma_o(8 \text{ in}) - \gamma_w(20 \text{ in}) = \frac{(.85)(62.4) \text{ lb}}{\text{ft}^3} \times 8 \text{ in} \times \frac{1 \text{ ft}^3}{1728 \text{ in}^3} - \frac{(62.4)(20)}{1728}$$

$\mathbf{p_A - p_B} = 0.246 \text{ psi} - 0.722 \text{ psi} = \mathbf{-0.477\ psi}$

3.65 $p_B + \gamma_o(.15 \text{ m}) + \gamma_m(.75 \text{ m}) - \gamma_w(.50 \text{ m}) = p_A$

$p_A - p_B = (.90)(9.81 \text{ kN/m}^3)(.15 \text{ m}) + (13.54)(9.81)(.75) - (9.81)(0.50)$

$p_A - p_B = (1.32 + 99.62 - 4.91)\text{kPa} = \mathbf{96.03\ kPa}$

3.66 $p_B + \gamma_w(.15 \text{ m}) + \gamma_m(0.75 \text{ m}) - \gamma_o(0.60 \text{ m}) = p_A$

$p_A - p_B = (9.81 \text{ kN/m}^3)(0.15 \text{ m}) + (13.54)(9.81)(0.75) - (0.86)(9.81)(0.60)$

$\mathbf{p_A - p_B} = (1.47 + 99.62 - 5.06)\text{kPa} = \mathbf{96.03\ kPa}$

3.67 $\overset{0}{\cancel{p_{atm}}} + \gamma_m(.475 \text{ m}) - \gamma_w(.30 \text{ m}) + \gamma_m(.25 \text{ m}) - \gamma_o(.375 \text{ m}) = p_A$

$p_A = \gamma_m(.725 \text{ m}) - \gamma_w(.30 \text{ m}) - \gamma_o(.375 \text{ m})$

$p_A = (13.54)(9.81 \text{ kN/m}^3)(.725 \text{ m}) - (9.81)(.30) - (.90)(9.81)(.375)$

$p_A = (96.30 - 2.94 - 3.31)\text{kPa} = \mathbf{90.05\ kPa(gage)}$

3.68 $p_B + \gamma_w(6 \text{ in}) + \gamma_m(6 \text{ in}) - \gamma_w(10 \text{ in}) + \gamma_m(8 \text{ in}) - \gamma_o(6 \text{ in}) = p_A$

$p_A - p_B = \gamma_m(14 \text{ in}) - \gamma_w(4 \text{ in}) - \gamma_o(6 \text{ in})$

$$p_A - p_B = (13.54) \times \frac{62.4 \text{ lb}}{\text{ft}^3} \times (14 \text{ in}) \times \frac{1 \text{ ft}^3}{1728 \text{ in}^3} - \frac{(62.4)(4)}{1728} - \frac{(.9)(62.4)(6)}{1728}$$

$\mathbf{p_A - p_B} = (6.85 - 0.14 - 0.195) \text{ psi} = \mathbf{6.51\ psi}$

3.69 $p_B - \gamma_w(2\text{ ft}) - \gamma_o(3\text{ ft}) + \gamma_w(11\text{ ft}) = p_A$

$$p_A - p_B = \gamma_w(9\text{ ft}) - \gamma_o(3\text{ ft}) = \frac{62.4\text{ lb}}{\text{ft}^3} \times 9\text{ ft} \times \frac{1\text{ ft}^2}{144\text{ in}^2} - \frac{(.90)(62.4)(3)}{144}$$

$\boldsymbol{p_A - p_B} = 3.90\text{ psi} - 1.17\text{ psi} = \mathbf{2.73\text{ psi}}$

3.70 $$p_{atm} + \gamma_w(6.8\text{ in}) = \boldsymbol{p_A} = 0 + \frac{62.4\text{ lb}}{\text{ft}^3} \times 6.8\text{ in} \times \frac{1\text{ ft}^3}{1728\text{ in}^3} = \mathbf{0.246\text{ psi}}$$

3.71 $\overset{0}{p_{atm}} + \gamma_{GF}h = p_A : h = L\sin 15° = 0.115\text{ m}\sin 15° = 0.0298\text{ m}$

$p_A = (0.87)(9.81\text{ kN/m}^3)(0.0298\text{ m}) = \mathbf{0.254\text{ kPa(gage)}}$

3.72 a. $\overset{0}{p_{atm}} + \gamma_m(.815\text{ m}) - \gamma_w(.60\text{ m}) = p_A$

$p_A = (13.54)(9.81\text{ kN/m}^3)(0.815\text{ m}) - (9.81)(.60) = \mathbf{102.4\text{ kPa(gage)}}$

b. $p_{atm} = \gamma_m h = (13.54)(9.81)(.737) = 97.89\text{ kPa}$

$p_A = 102.4 + 97.89 = \mathbf{200.3\text{ kP(abs)}}$

Barometers

3.73 A barometer measures atmospheric pressure.

3.74 See Fig. 3.14 and Section 3.7.

3.75 The height of the mercury column is convenient.

3.76 $$h = \frac{p_{atm}}{\gamma_w} = \frac{14.7\text{ lb ft}^3}{\text{in}^2 62.4\text{ lb}} \times \frac{144\text{ in}^2}{\text{ft}^2} = \mathbf{33.92\text{ ft}}$$ **very large (10.34 m)**

3.77 $\boldsymbol{h} = \mathbf{29.29\text{ in}}$ See Example Problem 3.13

3.78 $\boldsymbol{h} = \mathbf{760\text{ mm}}$ See Example Problem 3.11

3.79 The vapor pressure above the mercury column and the specific weight of the mercury change.

3.80 $$\Delta h = \frac{-1.0\text{ in of Mercury}}{1000\text{ ft}} \times 1250\text{ ft} = \mathbf{-1.25\text{ in}}$$

3.81 101.3 kPa → 760 mm of Mercury (See Ex. Prob. 3.11)

$$\Delta h = \frac{-85\text{ mm}}{1000\text{ m}} \times 5200\text{ ft} \times \frac{.3048\text{ m}}{1\text{ ft}} = \mathbf{-134.7\text{ mm}}$$

$h = 760 - 134.7 = 625.3\text{ mm}$

$$p_{atm} = \gamma_m h = 133.3\frac{\text{kN}}{\text{m}^3} \times 0.6253\text{ m} = \mathbf{83.35\text{ kPa}}$$

3.82 $p_{atm} = \gamma_m h = \frac{848.7 \text{ lb}}{\text{ft}^3} \times 28.6 \text{ in} \times \frac{1 \text{ ft}^3}{1728 \text{ in}^3}$ = **14.05 psia**

3.83 $p_{atm} = \gamma_m h = \frac{848.7 \text{ lb}}{\text{ft}^3} \times 30.65 \text{ in} \times \frac{1 \text{ ft}^3}{1728 \text{ in}^3}$ = **15.05 psia**

3.84 $h = \frac{p_{atm}}{\gamma_m} = \frac{14.2 \text{ lb}}{\text{in}^2} \times \frac{\text{ft}^3}{848.7 \text{ lb}} \times \frac{1728 \text{ in}^3}{\text{ft}^3}$ = **28.91 in**

3.85 $p_{atm} = \gamma_m h = 133.3 \frac{\text{kN}}{\text{m}^3} \times 0.745 \text{ m}$ = **99.3 kPa(abs)**

Expressing Pressures as the Height of a Column of Liquid

3.86 p = 5.37 inH_2O (1.0 psi/27.68 inH_2O) = **0.194 psi**
p = 5.37 inH_2O (249.1 Pa/1.0 inH_2O) = **1338 Pa = 134 kPa**

3.87 p = –3.68 inH_2O (1.0 psi/27.68 inH_2O) = **–0.133 psi**
p = –3.68 inH_2O (249.1 Pa/1.0 inH_2O) = **–917 Pa**

3.88 p = 3.24 mmHg (133.3 Pa/1.0 mmHg) = **431.9 Pa**
p = 3.24 mmHg (1.0 psi/57.71 mmHg) = **0.0627 psi**

3.89 p = 21.6 mmHg (133.3 Pa/1.0 mmHg) = **2879 Pa = 2.88 kPa**
p = 21.6 mmHg (1.0 psi/57.71 mmHg) = **0.418 psi**

3.90 p = –68.2 kPa (1000 Pa/kPa)(1.0 mmHg/133.3 Pa) = **–512 mmHg**

3.91 p = –12.6 psig (2.036 inHg/psi) = **–25.7 inHg**

3.92 p = 12.4 inWC = 12.4 inH_2O (1.0 psi/27.68 inH_2O) = **0.448 psi**
p = 12.4 inH_2O (249.1 Pa/1.0 inH_2O) = **3089 Pa = 3.09 kPa**

3.93 p = 115 inWC = 115 inH_2O (1.0 psi/27.68 inH_2O) = **4.15 psi**
p = 115 inH_2O (249.1 Pa/1.0 inH_2O) = 28 646 Pa = **28.6 kPa**

Pressure Gages and Transducers (See text for answers to 3.94 to 3.97.)

CHAPTER FOUR

FORCES DUE TO STATIC FLUIDS

Forces due to gas pressure

4.1 $F = \Delta p \cdot A$; where $\Delta p = p_{atm} - p_{inside}$; $A = \dfrac{\pi(12\text{ in})^2}{4} = 113.1\text{ in}^2$

$p_{atm} = \gamma_m h = \dfrac{844.9\text{ lb}}{\text{ft}^3} \times 30.5\text{ in} \times \dfrac{1\text{ ft}^3}{1728\text{ in}^3} = 14.91\text{ psi}$

$F = (14.91 - 0.12)\text{lb/in}^2 \times 113.1\text{ in}^2 = \mathbf{1673\ lb}$

4.2 $F = p \cdot A = (14.4\text{ lb/in}^2)(\pi(30\text{ in}^2)/4) = 10180\text{ lb}$

4.3 $F = \Delta p \cdot A$; $A = 36 \times 80\text{ in}^2 = 2880\text{ in}^2$

$\Delta p = \gamma_w h = \dfrac{62.4\text{ lb}}{\text{ft}^3} \times 1.20\text{ in} \times \dfrac{1\text{ ft}^3}{1728\text{ in}^3} = 0.0433\text{ lb/in}^2$

$F = (0.0433\text{ lb/in}^2)(2880\text{ in}^2) = \mathbf{125\ lb}$

4.4 $F = p \cdot A$; $A = 0.9396\text{ ft}^2$ (App. F)

$F = (325\text{ lb/in}^2)(0.9396\text{ ft}^2)(144\text{ in}^2/\text{ft}^2) = \mathbf{43973\ lb}$

4.5 $F = p \cdot A$; $A = \dfrac{\pi(0.030\text{ m})^2}{4} = 7.07 \times 10^{-4}\text{ m}^2$

$F = (3.50 \times 10^6\text{ N/m}^2)(7.07 \times 10^{-4}\text{ m}^2) = 2.47 \times 10^3\text{ N} = \mathbf{2.47\ kN}$

4.6 $F = p \cdot A$; $A = \pi(0.050\text{ m})^2/4 = 1.963 \times 10^{-3}\text{ m}^2$

$F = (20.5 \times 10^6\text{ N/m}^2)(1.963 \times 10^{-3}\text{ m}^2) = 40.25 \times 10^3\text{ N} = \mathbf{40.25\ kN}$

4.7 $F = p \cdot A$; $A = (0.800\text{ m})^2 = 0.640\text{ m}^2$

$F = (34.4 \times 10^3\text{ N/m}^2)(0.64\text{ m}^2) = 22.0 \times 10^3\text{ N} = \mathbf{22.0\ kN}$

Forces on horizontal flat surfaces under liquids

4.8 $F = p \cdot A$; $A = 24 \times 18\text{ in}^2 = 432\text{ in}^2$

$p = \gamma_A h = \dfrac{56.78\text{ lb}}{\text{ft}^3} \times 12.3\text{ ft} \times \dfrac{1\text{ ft}^2}{144\text{ in}^2} = 4.85\text{ lb/in}^2$

$F = (4.85\text{ lb/in}^2)(432\text{ in}^2) = \mathbf{2095\ lb}$

4.9 $F = p \cdot A$; $A = \pi(0.75\text{ in})^2/4 = 0.442\text{ in}^2$

$p = \gamma_m h = \dfrac{844.9\text{ lb}}{\text{ft}^3} \times 28.0\text{ in} \times \dfrac{1\text{ ft}^3}{1728\text{ in}^3} = 13.69\text{ lb/in}^2$

$F = (13.76\text{ lb/in}^2)(0.442\text{ in}^2) = \mathbf{6.05\ lb}$

4.10 Force on valve $= p \cdot A$; $A = \pi(0.095\text{ m})^2/4 = 7.088 \times 10^{-3}\text{ m}^2$

$p = \gamma_w h = \dfrac{9.81\text{ kN}}{\text{m}^3} \times 1.80\text{ m} = 17.66\text{ kN/m}^2$

$F = (17.66 \times 10^3\text{ N/m}^2)(7.088 \times 10^{-3}\text{ m}^2) = 125\text{ N}$ Acts at center

$\Sigma M_{hinge} = 0 = (125\text{ N})(47.5\text{ mm}) - F_O(65\text{ mm})$

$F_O = 5946\text{ N}\cdot\text{mm}/65\text{ mm} =$ **91.5 N** = Opening force

4.11 $F_B = p_B \cdot A$; $A = 1.2 \times 1.8\text{ m}^2 = 2.16\text{ m}^2$

$p_B = p_{air} + \gamma_o(0.50\text{ m}) + \gamma_w(0.75\text{ m})$

$p_B = 52\text{ kPa} + (0.85)(9.81\text{ kN/m}^3)(0.5\text{ m}) + (9.81)(0.75) = 63.5\text{ kPa}$

$F_B = (63.5 \times 10^3\text{ N/m}^2)(2.16\text{ m}^2) = 137 \times 10^3\text{ N} =$ **137 kN**

4.12 $F_B = p_B \cdot A$; $A = 2.0 \times 1.2\text{ m}^2 = 2.4\text{ m}^2$

$p_B = 200\text{ kPa} + \gamma_o(1.5\text{ m}) + \gamma_w(2.6\text{ m})$

$p_B = 200\text{ kPa} + (0.80)(9.81\text{ kN/m}^3)(1.5\text{ m}) + (9.81)(2.6) = 237.3\text{ kPa}$

$F_B = (237.3 \times 10^3\text{ N/m}^2)(2.4\text{ m}^2) = 569 \times 10^3\text{ N} =$ **569 kN**

4.13 $F_P = \Delta p \cdot A$; $A = \pi(0.60\text{ m})^2/8 + (0.80\text{ m})(0.60\text{ m}) + \dfrac{1}{2}(.60\text{ m})(0.30\text{ m})$

$A = 0.711\text{ m}^2$: Assume std. atmosphere above water.

$p_w = p_{atm} + \gamma_{sw} h = 101.3\text{ kPa} + (10.10\text{ kN/m}^3)(175\text{ m}) = 1869\text{ kPa}$

$\Delta p = 1869\text{ kPa} - 100\text{ kPa} = 1769\text{ kPa}$

$F_P = (1769 \times 10^3\text{ N/m}^2)(0.711\text{ m}^2) = 1.257 \times 10^6\text{ N} =$ **1.26 MN**

Forces on rectangular walls

4.14 $F_R = \gamma_w(h/2)A$

$= (62.4\text{ lb/ft}^3)(1.8\text{ ft})(8.0\text{ ft})(3.6\text{ ft}) =$ **3235 lb**

F_R acts ⊥ wall, 1.20 ft from bottom of gate

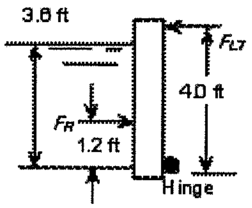

Part (b)

$\Sigma M_{hinge} = F_R(1.2\text{ ft}) - F_{LT}(4.0\text{ ft})$

$F_{LT} = F_R(1.2/4.0) = 3235\text{ lb}(0.30) = 970.5\text{ lb}$ on two latches

On each latch: $F_L = (970.5\text{ lb})/2 =$ **485 lb**

4.15 Length of sloped side $= L = 15.5\text{ ft}/\sin 60°$

$= 17.90\text{ ft}$

$A = (17.90\text{ ft})(11.6\text{ ft}) = 207.6\text{ ft}^2$

$F_R = \gamma(h/2)(A)$

$= \dfrac{78.50\text{ lb}}{\text{ft}^3} \times \dfrac{15.5\text{ ft}}{2} \times 207.6\text{ ft}$

$\boldsymbol{F_R = 126300}$ **lb**

$h_p = 2/3\ h = (2/3)(15.5\text{ ft}) =$ **10.33 ft**

$L_p = 2/3\ L = (2/3)(17.90\text{ ft}) =$ **11.93 ft**

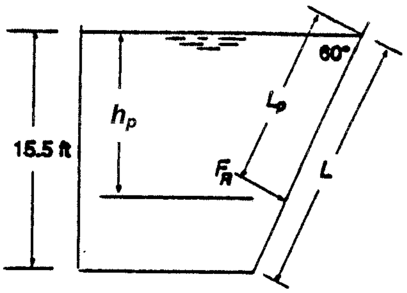

4.16 $F_R = \gamma(h/2)A = \dfrac{62.4\text{ lb}}{\text{ft}^3} \times 6\text{ ft} \times (12\text{ ft})(20\text{ ft})$

$\mathbf{F_R = 89850\ lb}$

$h_p = 2/3\ h = 2/3(12\text{ ft}) = \mathbf{8.0\ ft}$

Moment = $F_R \cdot 4$ ft = **359400 lb·ft**

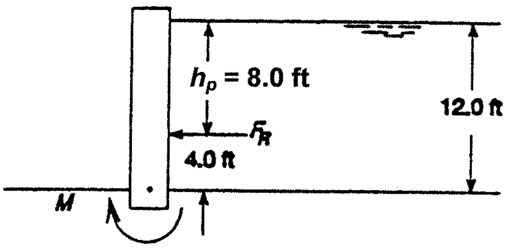

4.17 $F_R = \gamma_o(h/2)A$

$= (0.86)\dfrac{9.81\text{ kN}}{\text{m}^3} \times 0.7\text{ m} \times (1.98)(4.0)\text{ m}^2$

$\mathbf{F_R = 46.8\ kN}$

$h_p = 2/3\ h = (2/3)(1.4\text{ m}) = \mathbf{0.933\ m}$

$L_p = 2/3\ L = (2/3)(1.98\text{ m}) = \mathbf{1.32\ m}$

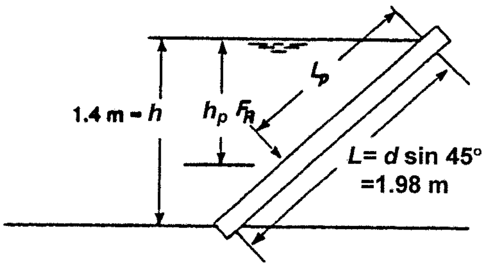

Forces on submerged plane areas

4.18 Centroid is at midpoint of AB

h_c = 14 in + 4 in = 18 in = 1.50 ft

$\overline{AB}$ = 10.0 in [3-4-5 triangle]

$\dfrac{L_c}{d_c} = \dfrac{5}{4};\ L_c = h_c \bullet \dfrac{5}{4} = 22.5\text{ in}$

Area = $\overline{AB} \cdot 3.5\text{ ft} = \dfrac{10}{12} \cdot 3.5 = 2.92\text{ ft}^2\ (420\text{ in}^2)$

$F_R = \gamma h_c A = 0.93(62.4\text{ lb/ft}^3)(1.50\text{ ft})(2.92\text{ ft}^2)$

$\mathbf{F_R = 254\ lb}$

$$I_c = \frac{BH^3}{12} = \frac{(42)(10)^3\text{ in}^4}{12} = 3500\text{ in}^4$$

$$L_p - L_c = \frac{I_c}{L_c A} = \frac{3500\text{ in}^4}{(22.5\text{ in})(420\text{ in}^2)} = \mathbf{0.37\ in}$$

$L_c = L_c + 0.37\text{ in} = 22.5\text{ in} + 0.37\text{ in} = \mathbf{22.87\ in}$

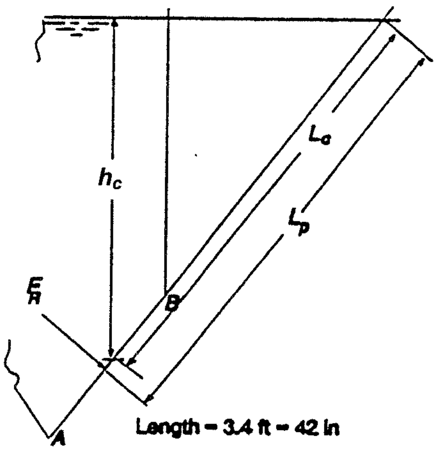

4.19 $h_c = 0.825\text{ m} = 825\text{ mm}$

$$L_c = \frac{h_c}{\cos 30°} = \frac{825\text{ mm}}{\cos 30°} = 953\text{ mm}$$

$$A = \frac{\pi(450\text{ mm})^2}{4} = 1.59 \times 10^5\text{ mm}^2\ [.159\text{ m}^2]$$

$F_R = \gamma h_c A = (0.85)(9.81\text{ kN/m}^3)(.825\text{ m})(0.159\text{ m}^2)$

$\mathbf{F_R = 1.09\ kN}$

$$I_c = \frac{\pi D^4}{64} = \frac{\pi(450)^4}{64} = 2.013 \times 10^9\text{ mm}^4$$

$$L_p - L_c = \frac{I_c}{L_c A} = \frac{2.013\times10^9}{(953)(1.59\times10^5)} = \mathbf{13.3\ mm}$$

$L_p = L_c + 13.3\text{ mm} = 953 + 13.3 = \mathbf{966\ mm}$

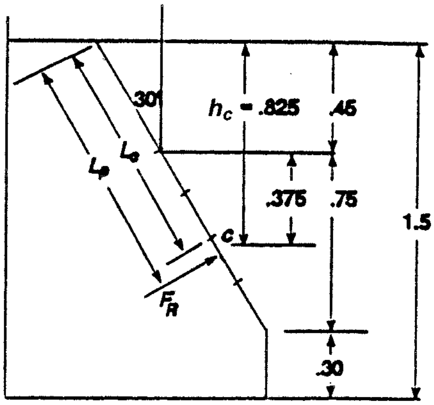

4.20 $h_c = 3.0$ m; $L_c = h_c/\cos 30° = 3.464$ m

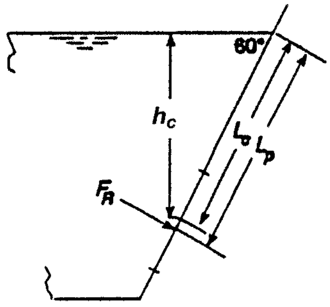

$$A = \frac{\pi D^2}{4} = \frac{\pi(2.4\text{ m})^2}{4} = 4.524\text{ m}^2$$

$$I = \frac{\pi D^4}{64} = \frac{\pi(2.4\text{ m})^4}{64} = 1.629\text{ m}^4$$

$F_R = \gamma h_c A = (1.10)(9.81\text{ kN/m}^3)(3.0\text{ m})(4.524\text{ m}^2)$

$\mathbf{F_R = 146.5\text{ kN}}$

$$L_p - L_c = \frac{I_c}{L_c A} = \frac{1.629\text{ m}^4}{(3.464\text{ m})(4.524\text{ m}^2)} = 0.104\text{ m}$$

$= \mathbf{104\text{ mm}}$

$L_p = L_c + 0.104\text{ m} = 3.464 + 0.104 = \mathbf{3.568\text{ m}}$

4.21

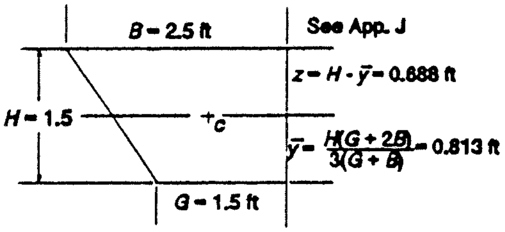

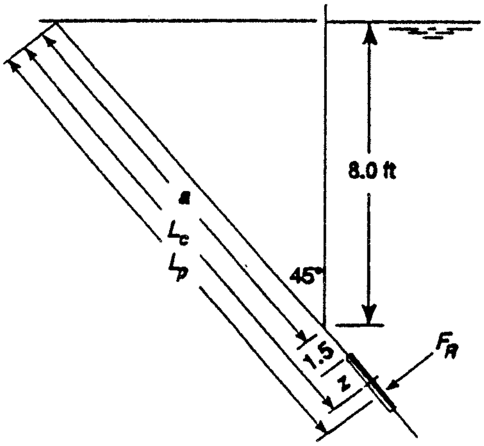

$L_c = a + 1.5 + z = 8.0/\cos 45° + 1.5 + z$

$= 13.50$ ft

$h_c = L_c \cos 45° = 9.55$ ft

$F_R = \gamma h_c A = (62.4\text{ lb/ft}^3)(9.55\text{ ft})(3.0\text{ ft}^2)$

$= \mathbf{1787\text{ lb}}$

$A = H(G + B)/2 = 1.5(4.0)/2 = 3.0\text{ ft}^2$

$$I_c = \frac{H^3(G^2 + 4GB + B^2)}{36(G + B)} = 0.551\text{ ft}^4$$

$L_p - L_c = I_c/L_cA = 0.551/(13.50)(3.0) = \mathbf{0.0136\text{ ft}} = 0.163$ in

$L_p = L_c + 0.0136\text{ ft} = 13.50 + 0.0136 = \mathbf{13.51\text{ ft}}$

4.22 $L_c = a + 1.0\text{ ft} = 3.0/\cos 30° + 1.0 = 4.464$ ft

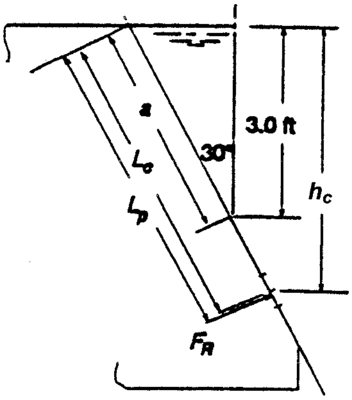

$h_c = L_c \cos 30° = 3.866$ ft

$A = \pi(.5\text{ ft})^2/4 = 0.196\text{ ft}^2$

$F_R = \gamma h_c A = (0.90)(62.4\text{ lb/ft}^3)(3.866\text{ ft})(0.196\text{ ft}^2)$

$\mathbf{F_R = 42.6\text{ lb}}$

$$I_c = \frac{\pi D^4}{64} = \frac{\pi(0.5)^2}{64} = 0.00307\text{ ft}^4$$

$$L_p - L_c = \frac{I_c}{L_c A} = \frac{0.00307}{(4.46)(0.196)} = \mathbf{0.00351\text{ ft}}$$

$L_p = L_c + 0.00351 = \mathbf{4.468\text{ ft}}$

4.23 $L_c = h_c/\cos 40° = 0.855/\cos 40°$
$= 1.116 \text{ m}$

$$A = (.300)^2 + \frac{\pi(.30)^2}{4} = 0.1607 \text{ m}^2$$

$F_R = \gamma h_c A$
$= (0.90)(9.81 \text{ kN/m}^3)(0.855 \text{ m})(A)$

$\boldsymbol{F_R = 1.213 \text{ kN}}$

$$I_c = \frac{(0.300)^4}{12} + \frac{\pi(.300)^4}{64}$$

$I_c = 0.001073 \text{ m}^4$

$$L_p - L_c = \frac{I_c}{L_c A} = \frac{0.001073}{(1.116)(0.1607)}$$

$L_p - L_c = .00598 \text{ m} = \mathbf{5.98 \text{ mm}}$
$L_p = \mathbf{1.122 \text{ m}}$

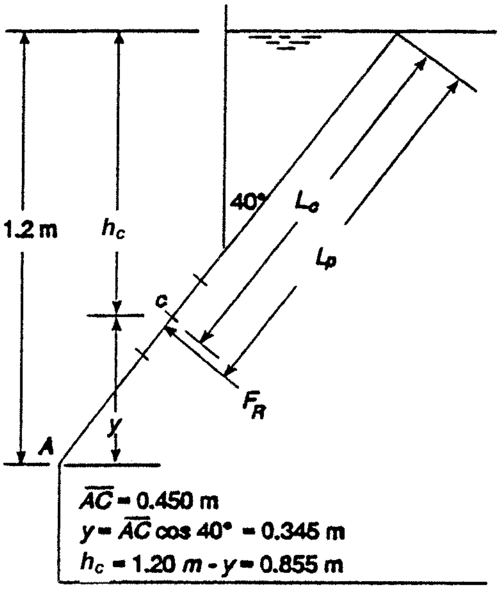

4.24 $A = \pi D^2/4 = \pi(2.0)^2/4 = 3.142 \text{ ft}^2$
$F_R = \gamma h_c A$
$= 62.4 \text{ lb/ft}^3 \times 6.536 \text{ ft} \times 3.142 \text{ ft}^2$

$\boldsymbol{F_R = 1281 \text{ lb}}$

$$I_c = \frac{\pi D^4}{64} = 0.785 \text{ ft}^4$$

$$L_p - L_c = \frac{I_c}{L_c A} = \frac{0.785}{(9.243)(3.142)}$$

$L_p - L_c = \mathbf{0.027 \text{ ft}} = [0.325 \text{ in}]$
$L_p = \mathbf{9.270 \text{ ft}}$

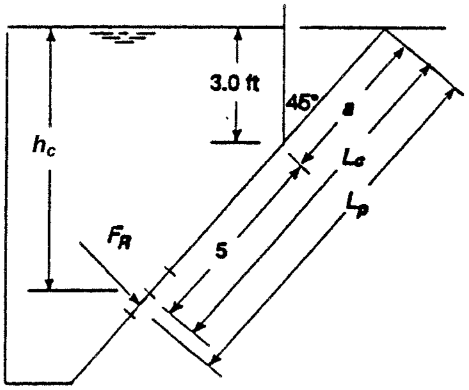

$a = 3.0/\cos 45° = 4.243 \text{ ft}$
$L_c = 5 + a = 9.243 \text{ ft}$
$h_c = L_c \cos 45° = 6.536 \text{ ft}$

4.25 $L_c = a + 0.50 \text{ m} = 0.76 \text{ m}/\cos 20° + 0.50$
$L_c = 1.309 \text{ m}$
$h_c = L_c \cos 20° = 1.230 \text{ m}$
$A = (1.00)(0.60) = 0.60 \text{ m}^2$
$F_R = \gamma h_c A = (0.80)(9.81 \text{ kN/m}^3)(1.23 \text{ m})(0.60 \text{ m}^2)$

$\boldsymbol{F_R = 5.79 \text{ kN}}$

$$I_c = \frac{BH^3}{12} = \frac{(0.60)(1.00)^3 \text{ m}^4}{12} = 0.05 \text{ m}^4$$

$$L_p - L_c = \frac{I_c}{L_c A} = \frac{0.05}{(1.309)(0.60)} = \mathbf{0.0637 \text{ m} = 63.7 \text{ mm}}$$

$L_p = L_c + 0.0637 = \mathbf{1.372 \text{ m}}$

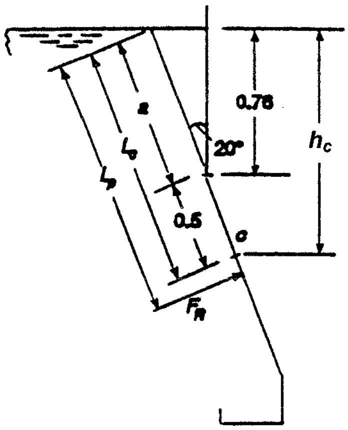

4.26 $a = \frac{5}{4} \cdot 20 = 25$ in

$L_c = a + 25 = 50.0$ in $= 4.167$ ft

$h_c = \frac{4}{5} \cdot L_c = 40.0$ in $= 3.333$ ft

$A = (8)(50) = 400\ \text{in}^2(1\ \text{ft}^2/144\ \text{in}^2)$

$= 2.778\ \text{ft}^2$

$F_R = \gamma h_c A$

$= (1.43)(62.4\ \text{lb/ft}^3)(3.333\ \text{ft})(2.778\ \text{ft}^2)$

$\boldsymbol{F_R = 826}$ **lb**

$I_c = \frac{BH^3}{12} = \frac{(8)(50)^3}{12} = 83{,}333\ \text{in}^4$

$L_p - L_c = \frac{I_c}{L_c A} = \frac{83333\ \text{in}^4}{(50.0\ \text{in})(400\ \text{in}^2)}$

$=$ **4.167 in**

$L_p = L_c + 4.167$ in $=$ **54.167 in** (4.514 ft)

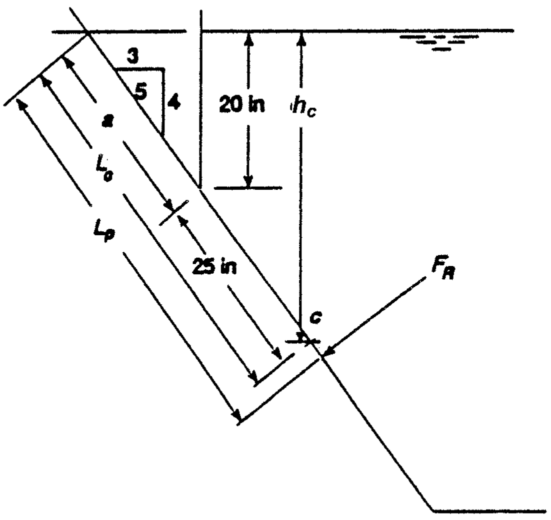

4.27

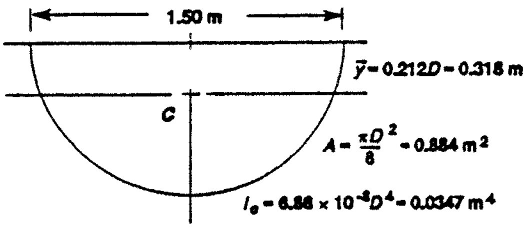

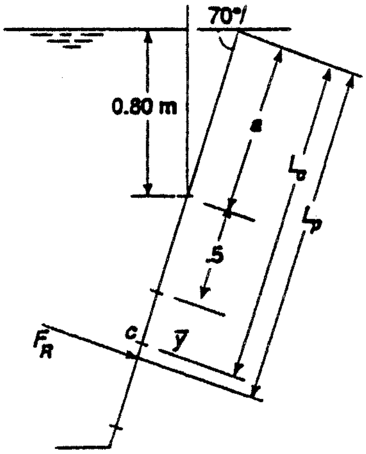

$a = 0.80\ \text{m}/\sin 70° = 0.851$ m

$L_c = a + 0.5 + y = 0.851 + 0.50 + 0.318 = 1.669$ m

$h_c = L_c \sin 70° = 1.569$ m

$F_R = \gamma h_c A$

$= (0.88)(9.81\ \text{kN/m}^3)(1.569\ \text{m})(0.884\ \text{m}^2)$

$\boldsymbol{F_R = 11.97}$ **kN**

$L_p - L_c = \frac{I_c}{L_c A} = \frac{0.0347\ \text{m}^4}{(1.669\ \text{m})(0.884\ \text{m}^2)} =$ **0.0235 m**

$=$ **23.5 mm**

$L_p = L_c + 0.0235$ m $= 1.669$ m $+ 0.0235$ m $=$ **1.693 m**

4.28

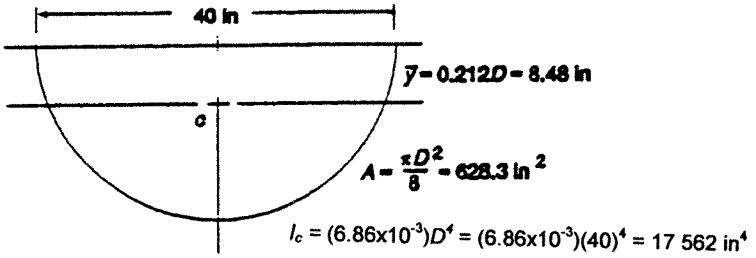

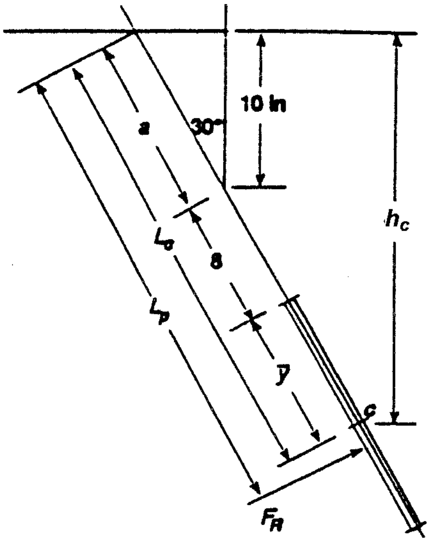

$a = 10 \text{ in}/\cos 30° = 11.55 \text{ in}$

$L_c = a + 8 + \bar{y} = 11.55 + 8.0 + 8.48 = 28.03 \text{ in}$

$h_c = L_c \cos 30° = 24.27 \text{ in } [2.023 \text{ ft}]$

$F_R = \gamma h_c A$

$$= (1.10)(62.4 \text{ lb/ft}^3)(2.023 \text{ ft})\frac{(628.3 \text{ in}^2)(1 \text{ ft}^2)}{144 \text{ in}^2}$$

$\mathbf{F_R = 605.8 \text{ lb}}$

$$L_p - L_c = \frac{I_c}{L_c A} = \frac{17\ 562 \text{ in}^4}{(28.03 \text{ in})(628.3 \text{ in}^2)} = 0.997$$

$= \mathbf{7.135 \text{ in}}$

$L_p = L_c + 7.135 \text{ in} = \mathbf{29.03 \text{ in}}$

4.29

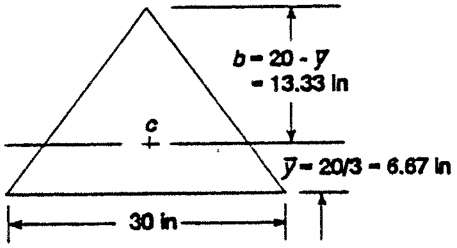

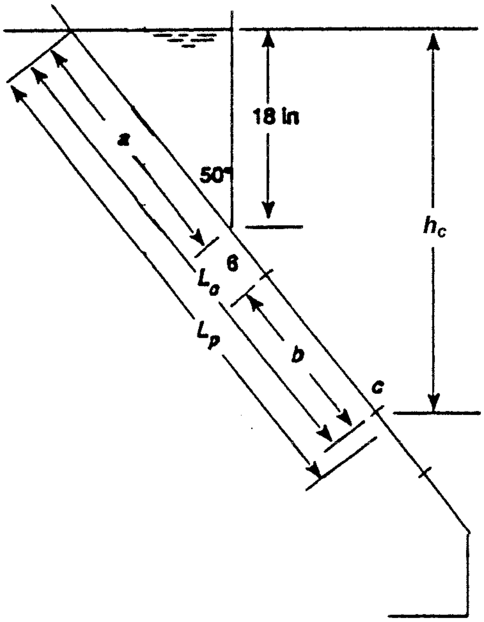

$$A = \frac{1}{2}BH = \left(\frac{1}{2}\right)(30)(20) = 300 \text{ in}^2$$

$$I_c = \frac{BH^3}{36} = \frac{30(20)^3}{36} = 6667 \text{ in}^4$$

$a = 18 \text{ in}/\cos 50° = 28.0 \text{ in}$

$L_c = a + 6 + b = 28.0 + 6.0 + 13.33$

$L_c = 47.34 \text{ in}$

$h_c = L_c \cos 50° = 30.43 \text{ in}$

$F_R = \gamma h_c A$

$F_R = 62.4 \text{ lb/ft}^3 \times 30.43 \text{ in} \times 300 \text{ in}^2$

$$\times \frac{\text{ft}^3}{1728 \text{ in}^3} = \mathbf{329.6 \text{ lb}}$$

$$L_p - L_c = \frac{I_c}{L_c A} = \frac{6667 \text{ in}^4}{(47.34 \text{ in})(300 \text{ in}^2)} = \mathbf{0.469 \text{ in}}$$

$L_p = L_c + 0.469 \text{ in} = 47.34 + 0.469 = \mathbf{47.81 \text{ in}}$

4.30 $h_c = L_c$

$= 0.375 + 0.150 = 0.525$ m

$A = (0.60)(0.30) + \pi(0.30)^2/4$

$A = 0.2507 \text{ m}^2$

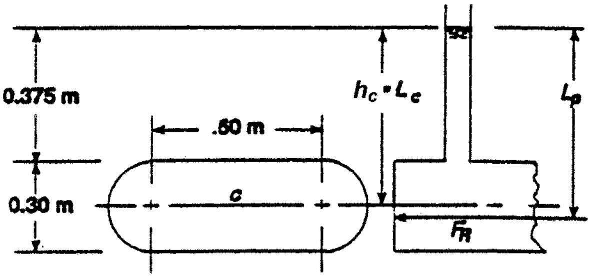

$F_R = \gamma h_c A$

$F_R = (0.67)(9.81 \text{ kN/m}^3)(0.525 \text{ m})(0.2507 \text{ m}^2)$

$F_R = 0.865 \text{ kN} = \mathbf{865\ N}$

$$I_c = \frac{(0.60)(0.30)^3}{12} + \frac{\pi(0.30)^4}{64} = 0.001748 \text{ m}^4$$

$$L_p - L_c = \frac{I_c}{L_c A} = \frac{0.001748 \text{ m}^4}{(0.525 \text{ m})(0.2507 \text{ m}^2)} = 0.0133 \text{ m} = \mathbf{13.3\ mm}$$

$L_p = L_c + 13.3 \text{ mm} = 525 + 13.3 = \mathbf{538\ mm}$

4.31 (See Prob. 4.30) $h_c = L_c = 0.150$ m

$F_R = \gamma h_c A = (0.67)(9.81)(0.150)(0.2507) = 0.247 \text{ kN} = \mathbf{247\ N}$

$$L_p - L_c = \frac{I_c}{L_c A} = \frac{0.001748 \text{ m}^4}{(0.150 \text{ m})(0.2507 \text{ m}^2)} = 0.0465 \text{ m} = \mathbf{46.5\ mm}$$

$L_p = L_c + 46.5 \text{ mm} = 150 \text{ mm} + 46.5 \text{ mm} = \mathbf{196.5\ mm}$

4.32 $$\bar{Y} = \frac{\sum Ay}{A_T} = \frac{9.0 \times 10^{-3} \text{ m}^3}{0.1253 \text{ m}^2}$$

$= 0.0718$ m

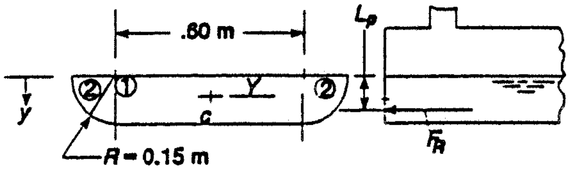

$L_c = h_c = \bar{Y} = 0.0718 \text{ m} = 71.8 \text{ mm}$

	$A(\text{m}^2)$	$\bar{y}(\text{m})$	$A\bar{y}(\text{m}^3)$	$I_i(\text{m}^4)$	$h(\text{m})$	Ah^2
1 Rect.	0.0900	0.075	6.750×10^{-3}	1.688×10^{-4}	0.00324	9.4×10^{-7}
2 Semicirc.	0.0353	0.0636	2.245×10^{-3}	5.557×10^{-5}	0.00816	2.35×10^{-6}
	0.1253		9.000×10^{-3}	2.243×10^{-4}		3.30×10^{-6}

$I_c = 2.276 \times 10^{-4} \text{ m}^4$

$$L_p - L_c = \frac{I_c}{LA} = \frac{2.276 \times 10^{-4} \text{ m}^4}{(0.0718 \text{ m})(0.1253 \text{ m}^2)} = 0.0253 \text{ m} = \mathbf{25.3\ mm}$$

$L_p = L_c + 25.3 \text{ mm} = \mathbf{97.1\ mm}$

$F_R = \gamma h_c A = (0.67)(9.81 \text{ kN/m}^3)(0.0718 \text{ m})(0.1253 \text{ m}^2) = 0.059 \text{ kN} = \mathbf{59\ N}$

4.33 **Rectangular Wall**

$F_R = \gamma(h/2)A$

$= 62.4 \text{ lb/ft}^3 \times 4.0 \text{ ft} \times (8.0 \text{ ft})(15.0 \text{ ft})$

$=$ **29950 lb**

$L_p = \frac{2}{3}h = \frac{2}{3}(8.0 \text{ ft}) =$ **5.333 ft**

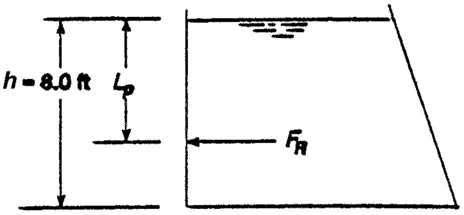

4.34 $G = 10.0 \text{ ft} - 8.0 \text{ ft}/\tan 60° = 5.381 \text{ ft}$

$A = \dfrac{H(G+B)}{2} = 61.52 \text{ ft}^2$

$\bar{y} = \dfrac{H(G+2B)}{3(G+B)} = 4.40 \text{ ft} = h_c = L_c$

$F_R = \gamma h_c A$

$F_R = 62.4 \text{ lb/ft}^3 \times 4.40 \text{ ft} \times 61.52 \text{ ft}^2$

$=$ **16894 lb**

$I_c = \dfrac{H^3(G^2 + 4GB + B^2)}{36(G+B)}$

$= \dfrac{8^3[5.38^2 + 4(5.38)(10) + 10^2]}{36(5.38+10)} = 318.3 \text{ ft}^4$

$L_p - L_c = \dfrac{I_c}{L_c A} = \dfrac{318.3}{(4.40)(61.52)} =$ **1.176 ft**

$L_p = L_c + 1.176 =$ **5.576 ft**

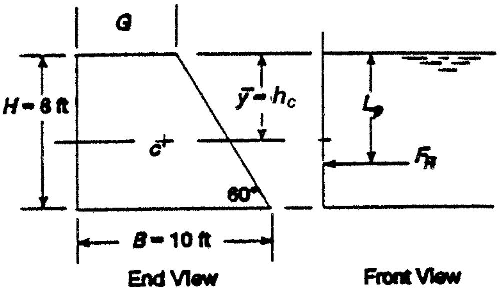

4.35 **Rectangular Wall**

$\overline{AB} = 8.0 \text{ ft}/\sin 60° = 9.237 \text{ ft}$

$A = \overline{AB} \times 15 \text{ ft} = 138.6 \text{ ft}^2$

$F_R = \gamma(h/2)A$

$F_R = 62.4 \text{ lb/ft}^3 \times 4.0 \text{ ft} \times 138.6 \text{ ft}^2 =$ **34586 lb**

$L_p = \frac{2}{3}(\overline{AB}) = \frac{2}{3}(9.237 \text{ ft}) =$ **6.158 ft**

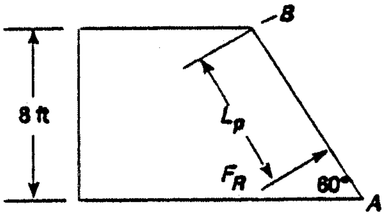

4.36 $\bar{y} = \dfrac{H(G+2B)}{3(G+B)} = \dfrac{4.6[1.2 + 2(3.856)]}{3(1.2+3.856)} = 2.703 \text{ m}$

$h_c = H - \bar{y} = 4.6 - 2.703 = 1.897 \text{ m} = L_c$

$F_R = \gamma h_c A$ **Acts ⊥ page**

$A = \dfrac{H(G+B)}{2} = \dfrac{4.6(1.2+3.856)}{2} = 11.63 \text{ m}^2$

$F_R = (1.10)(9.81 \text{ kN/m}^2)(1.897 \text{ m})(11.63 \text{ m}^2)$

$=$ **238 kN**

$I_c = \dfrac{H^3(G^2 + 4GB + B^2)}{36(G+B)} = 18.62 \text{ m}^4$

$L_p - L_c = \dfrac{I_c}{L_c A} = \dfrac{18.62 \text{ m}^4}{(1.897 \text{ m})(11.63 \text{ m}^2)} =$ **0.844 m**

$L_p = L_c + 0.844 \text{ m} = 1.897 + 0.844 =$ **2.741 m**

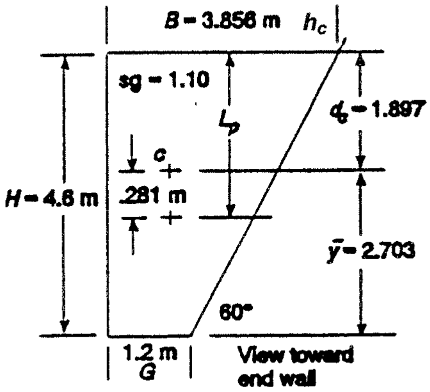

B = 1.2 m + 4.6 m/tan 60° = 3.856 m

4.37 **Rectangular Wall**: $F_R = \gamma h_c A$

$F_R = (1.10)(9.81\ \text{kN/m}^3)(4.60/2)\text{m}(4.6)(3.0)\text{m}^2$
$= \mathbf{343\ kN}$

F_R acts 1/3 from bottom or 2/3 from surface

$L_p = \frac{2}{3}(4.60\ \text{m}) = \mathbf{3.067\ m}$

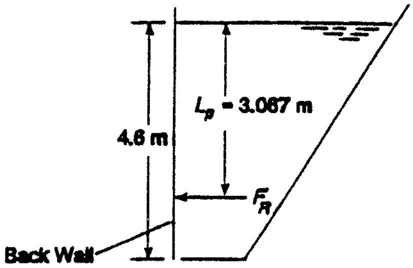

4.38

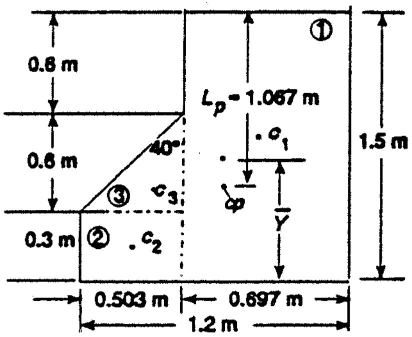

END WALL

	A	$\bar{y}$	$A\bar{y}$	$y_i = \bar{y} - \bar{Y}$
①	1.046	0.75	0.784	0.096
②	0.151	0.15	0.023	–0.504
③	0.151	0.50	0.075	–0.154
$\sum A = 1.348\ \text{m}^2$		$\sum A\bar{y} = 0.882\ \text{m}^3$		

$$\bar{Y} = \frac{\Sigma A\bar{y}}{\Sigma A} = \frac{0.882\ \text{m}^3}{1.348\ \text{m}^2} = 0.654\ \text{m}$$

$h_c = 1.5\ \text{m} - \bar{Y} = 0.846\ \text{m} = L_c$

$F_R = \gamma h_c A = (0.90)(9.81\ \text{kN/m}^3)(0.846\ \text{m})(1.348\ \text{m}^2) = \mathbf{10.07\ kN}$

$I_c = I_1 + A_1 y_1^2 + I_2 + A_2 y_2^2 + I_3 + A_3 y_3^2$

$$I_c = \frac{(0.697)(1.5)^3}{12} + (1.046)(0.096)^2 + \frac{(0.503)(0.30)^3}{12} + (0.151)(0.504)^2 + \frac{(0.503)(0.60)^3}{36} + (0.151)(0.154)^2$$

$I_c = 0.1960 + 0.0096 + 0.0011 + 0.0384 + 0.0030 + 0.0036 = 0.2518\ \text{m}^4$

$$L_p = L_c + \frac{I_c}{L_c A} = 0.846\ \text{m} + \frac{0.2518}{(0.846)(1.348)}\ \text{m} = 0.846 + \underbrace{0.221}_{L_p - L_c} = \mathbf{1.067\ m}$$

4.39 Vertical back wall is **rectangular**

$F_R = \gamma h_c A = \gamma(h/2)(A)$

$\gamma = 0.90(9.81\ \text{kN/m}^3) = 8.829\ \text{kN/m}^3$

$h/2 = 1.50\ \text{m}/2 = 0.75\ \text{m}$

$A = (1.50\ \text{m})(1.20\ \text{m}) = 1.80\ \text{m}^2$

$F_R = (8.829\ \text{kN/m}^3)(0.75\ \text{m})(1.80\ \text{m}^2)$
$= \mathbf{11.92\ kN}$

$L_p = \frac{2}{3} \times h = \frac{2}{3} \times 1.50\ \text{m} = \mathbf{1.00\ m}$

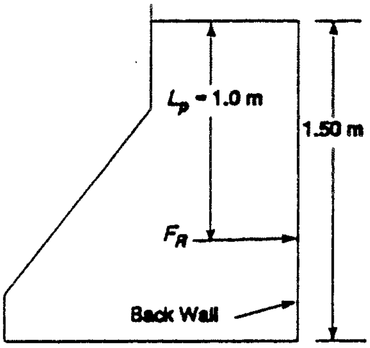

4.40 $h_c = L_c = 4.00$ ft; $A = (4.00)(1.25) = 5.00$ ft^2

$F_R = \gamma h_c A = (62.4 \text{ lb/ft}^3)(4.00 \text{ ft})(5.00 \text{ ft}^2)$

$= \mathbf{1248 \text{ lb}}$

$I_c = BH^3/12 = (1.25)(4.00)^3/12 = 6.667$ ft^4

$$L_p - L_c = \frac{I_c}{L_c A} = \frac{6.667 \text{ ft}^4}{(4.00 \text{ ft})(5.00 \text{ ft}^2)}$$

$= 0.333$ ft

$\Sigma M_S = 0 = F_R(1.667) - F_H(4.00)$

$$F_H = \frac{(1248)(1.667)}{4.00} = \mathbf{520 \text{ lb}}$$

$\Sigma M_H = 0 = F_R(2.333) - F_S(4.00)$

$$F_S = \frac{(1248)(2.333)}{4} = \mathbf{728 \text{ lb}}$$

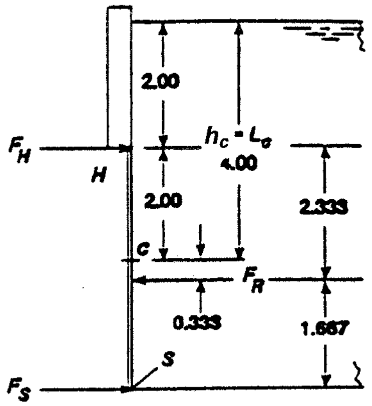

4.41 **Water side:**

$F_{R_w} = \gamma_w(h_w/2)A_w$

$A_w = (2.50)(0.60) = 1.50$ m^2

$F_{R_w} = (9.81)(1.25)(1.50) = \mathbf{18.39 \text{ kN}}$

$$L_{p_w} = \frac{2}{3} \cdot 2.50 = 1.667 \text{ m}$$

Oil side:

$F_{R_o} = \gamma_o(h_o/2)A_o$

$A_o = (2.00)(0.60) = 1.20$ m^2

$F_{R_o} = (9.81)(0.9)(1.00)(1.20) = \mathbf{10.59 \text{ kN}}$

$$L_{p_o} = \frac{2}{3} \cdot 2.00 = 1.333 \text{ m}$$

$\Sigma M_S = 0$

$= F_{R_w}(1.967) - F_{R_o}(2.133) - F_H(2.80)$

$F_H = [(18.39)(1.967) - (10.59)(2.133)]/2.80 = \mathbf{4.85 \text{ kN}} \leftarrow$

$\Sigma M_H = 0 = F_{R_w}(0.833) - F_{R_o}(0.667) - F_S(2.80)$

$F_S = [(18.39)(0.833) - (10.59)(0.667)]/2.80 = \mathbf{2.95 \text{ kN}} \leftarrow$

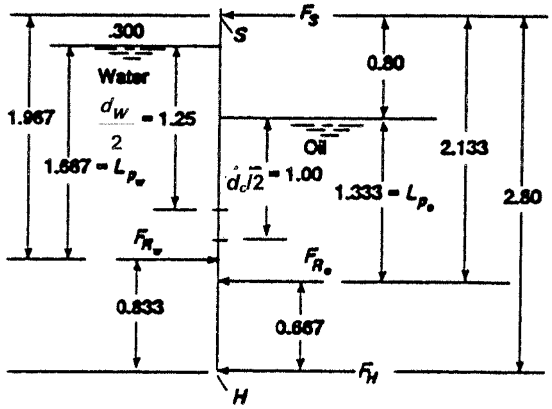

4.42 $h_c = 38 + y = 38 + 5\cos 30° = 42.33$ in

$L_c = h_c/\cos 30° = 48.88$ in

$F_R = \gamma h_c A$

$A = \pi(10)^2/4 = 78.54\ \text{in}^2$

$$F_R = \frac{62.4\ \text{lb}}{\text{ft}^3}\cdot\frac{42.33\ \text{in}\cdot 78.54\ \text{in}^2}{1728\ \text{in}^3/\text{ft}^3}$$

$\mathbf{F_R = 120.1\ lb}$

$$I_c = \frac{\pi(10)^4}{64} = 490.9\ \text{in}^4$$

$$L_p - L_c = \frac{I_c}{L_c A}$$

$$L_p - L_c = \frac{490.9\ \text{in}^4}{(48.88\ \text{in})(78.54\ \text{in}^2)} = \mathbf{0.128\ in}$$

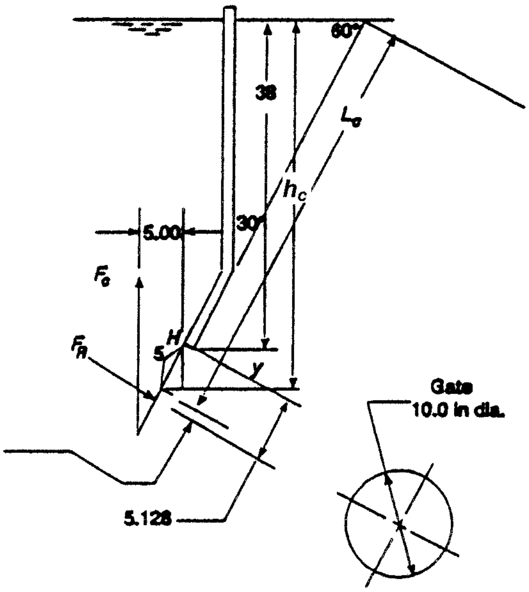

Sum moments about hinge at top of gate.

$\Sigma M_H = 0 = F_R(5.128) - F_c(5.00)$

$$F_c = \frac{(120.1\ \text{lb})(5.128\ \text{in})}{5.00\ \text{in}} = \mathbf{123.2\ lb = cable\ force}$$

Piezometric head

4.43 $$h_a = \frac{p_a}{\gamma_o} = \frac{13.8\ \text{kN}}{\text{m}^2}\times\frac{\text{m}^3}{(0.85)(9.81\ \text{kN})} = 1.655\ \text{m}$$

See Prob. 4.19 for data.

$h_{ce} = h_c + h_a = 0.825\ \text{m} + 1.655\ \text{m} = 2.480\ \text{m}$

$L_{ce} = h_{ce}/\cos 30° = 2.480\ \text{m}/\cos 30° = 2.864\ \text{m}$

$F_R = \gamma_o h_{ce} A = (0.85)(9.81\ \text{kN/m}^3)(2.480\ \text{m})(0.159\ \text{m}^2) = \mathbf{3.29\ kN}$

$$L_{pe} - L_{ce} = \frac{I_c}{L_c A} = \frac{2.013\times10^9\ \text{mm}^4}{(2.864\ \text{mm})(1.59\ \times10^5\ \text{mm}^2)} = \mathbf{4.42\ mm}$$

4.44 $$h_a = \frac{p_a}{\gamma_{oD}} = \frac{25.0\ \text{kN}}{\text{m}^2}\times\frac{\text{m}^3}{(1.10)(9.81\ \text{kN})} = 2.317\ \text{m}$$

See Prob. 4.20 for data.

$h_{ce} = h_c + h_a = 3.000\ \text{m} + 2.317\ \text{m} = 5.317\ \text{m}$

$L_{ce} = h_{ce}/\cos 30° = 5.317/\cos 30° = 6.140\ \text{m}$

$F_R = \gamma_{oD} h_{ce} A = (1.10)(9.81\ \text{kN/m}^3)(5.317\ \text{m})(4.524\ \text{m}^2) = \mathbf{259.6\ kN}$

$$L_{pe} - L_{ce} = \frac{I_c}{L_{ce} A} = \frac{1.629\ \text{m}^4}{(6.140\ \text{m})(4.524\ \text{m}^2)} = 0.0586\ \text{m} = \mathbf{58.6\ mm}$$

4.45 $h_a = \dfrac{p_a}{\gamma_{cs}} = \dfrac{2.50\text{ lb ft}^3}{\text{in}^2(1.43)(62.4\text{ lb})} \times \dfrac{1728\text{ in}^3}{1\text{ ft}^3} = 48.41\text{ in} = 4.034\text{ ft}$

See Prob. 4.26.

$h_{ce} = h_c + h_a = 40.0\text{ in} + 48.41\text{ in} = 88.41\text{ in} = 7.368\text{ ft}$

$L_{ce} = h_{ce}\left(\dfrac{5}{4}\right) = 88.41\text{ in}\left(\dfrac{5}{4}\right) = 110.5\text{ in} = 9.209\text{ ft}$

$F_R = \gamma_{cs}h_{ce}A = (1.43)(62.4\text{ lb/ft}^3)(7.368\text{ ft})(2.778\text{ ft}^2) = \mathbf{1826\text{ lb}}$

$L_{pe} - L_{ce} = \dfrac{I_c}{L_c A} = \dfrac{83333\text{ in}^4}{(110.5\text{ in})(400\text{ in}^2)} = \mathbf{1.885\text{ in}}$

4.46 $h_a = \dfrac{p_a}{\gamma_{EG}} = \dfrac{4.0\text{ lb}}{\text{in}^2} \times \dfrac{\text{ft}^3}{(1.10)(62.4\text{ lb})} \times \dfrac{1728\text{ in}^3}{\text{ft}^3} = 100.7\text{ in} = 8.392\text{ ft}$

See Prob. 4.28.

$h_{ce} = h_c + h_a = 24.27\text{ in} + 100.7\text{ in} = 124.97\text{ in}$ [See Prob. 4.28]

$L_{ce} = h_{ce}/\cos 30° = 144.3\text{ in} = 12.03\text{ ft}$

$F_R = \gamma_{EG}h_{ce}A = (1.10)(62.4\text{ lb/ft}^3)(124.97\text{ in})(1\text{ ft}/12\text{ in})(628.3\text{ in}^2)(1\text{ ft}^2/144\text{ in}^2)$

$F_R = \mathbf{3119\text{ lb}}$

$L_{pe} - L_{ce} = \dfrac{I_c}{L_{ce}A} = \dfrac{17\ 562\text{ in}^4}{(144.3\text{ in})(628.3\text{ in}^2)} = \mathbf{0.194\text{ in}}$

Forces on curved surfaces

4.47 $R = 0.75\text{ m}$, $w = 2.00\text{ m}$; $F_V = \gamma \cdot V = \gamma A w$

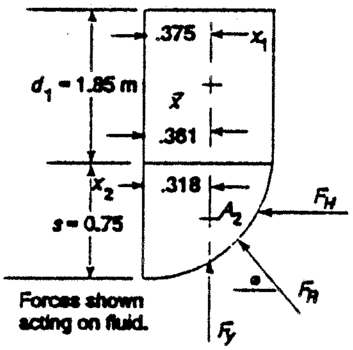

$F_V = 9.81\text{ kN/m}^3 \times \left[(1.85)(0.75) + \dfrac{\pi(0.75)^2}{4}\right] \times 2.00\text{ m}^3$

$= \mathbf{35.89\text{ kN}}$

$\bar{x} = \dfrac{A_1x_1 + A_2x_2}{A_1 + A_2}$

$A_1 = (0.75)(1.85) = 1.388\text{ m}^2$

$A_2 = \pi(0.75)^2/4 = 0.442\text{ m}^2$

$\bar{x} = \dfrac{(1.388)(.375) + (0.442)(0.318)}{1.388 + 0.442} = \mathbf{0.361\text{ m}}$

$h_c = h_1 + s/2 = 1.85 + 0.75/2 = 2.225\text{ m}$

$F_H = \gamma s w h_c = 9.81\text{ kN/m}^3 \times (0.75)(2.00)(2.225)\text{m}^3$

$F_H = \mathbf{32.74\text{ kN}}$

$h_p = h_c + \dfrac{s^2}{12h_c} = 2.225 + \dfrac{0.75^2}{12(2.225)} = 2.225 + 0.021 = \mathbf{2.246\text{ m}}$

$F_R = \sqrt{F_V^2 + F_H^2} = \sqrt{35.89^2 + 32.74^2} = \mathbf{48.58\text{ kN}}$

$\phi = \tan^{-1}\dfrac{F_V}{F_H} = \tan^{-1}\dfrac{35.89}{32.74} = \mathbf{47.6°}$

4.48 $F_V = \gamma V = \gamma A w$

$F_V = (0.826)(9.81\ \text{kN/m}^3)(1.389\ \text{m}^2)(2.50\ \text{m}) = \mathbf{28.1\ kN}$

$A = A_1 + A_2 = (0.62)(1.25) + \pi(1.25)^2/8$

$A = 1.389\ \text{m}^2$

$F_H = 0$ because horiz. forces are balanced

$F_R = F_V = 28.1\ \text{kN}$

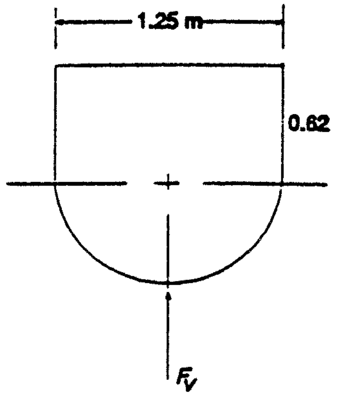

4.49 $y_1 = R \sin 15° = 3.882$ ft

$s = R - y_1 = 15.00 - 3.882 = 11.118$ ft

$h_c = h + y_1 + s/2$

$= 10.0 + 3.882 + 5.559$

$h_c = 19.441$ ft

$F_H = \gamma h_c s w = (62.4)(19.441)(11.118)(5.00)$

$\boldsymbol{F_H = 67{,}437}$ **lb**

$$h_p = h_c + \frac{s^2}{12h_c} = 19.441 + 0.530 \text{ ft}$$

$\boldsymbol{h_p = 19.971}$ **ft**

$F_V = \gamma V = \gamma A_T w$

$A_1 = (14.489)(10.0) = 144.89\ \text{ft}^2$

$$A_2 = \frac{1}{2}(y_1)(R \cos 15°) = \frac{1}{2}(3.882)(14.489)$$

$= 28.12\ \text{ft}^2$

$$A_3 = \pi R^2 \cdot \frac{75}{360} = \pi(15.0)^2 \frac{75}{360}$$

$= 147.26\ \text{ft}^2$

$A_T = A_1 + A_2 + A_3 = 320.27\ \text{ft}^2$

$F_V = \gamma A_T w = (62.4)(320.27)(5.00)$

$= \mathbf{99{,}925\ lb}$

$x_1 = 14.489/2 = 7.245$ ft

$$x_2 = \frac{2}{3}(14.489) = 9.659 \text{ ft}$$

$$x_3 = b \sin 37.5° \text{ where } b = 38.197 \frac{R \sin(37.5°)}{37.5°} = 9.301 \text{ ft (from } \textit{Machinery's Handbook})$$

$x_3 = 9.301 \sin 37.5° = 5.662$ ft

$$\bar{x} = \frac{A_1 x_1 + A_2 x_2 + A_3 x_3}{A_T} = \mathbf{6.738\ ft}$$

$$F_R = \sqrt{F_H^2 + F_V^2} = \sqrt{67437^2 + 99925^2} = \mathbf{120550\ lb}$$

$$\phi = \tan^{-1}\frac{F_V}{F_H} = \tan^{-1}\frac{99925}{67437} = \mathbf{56.0°}$$

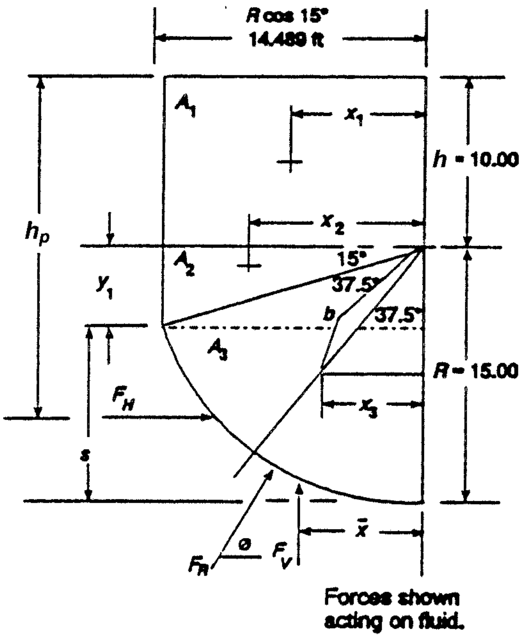

4.50 $F_V = \gamma_o V = \gamma_o A w$

$A = A_1 + A_2 = (7.50)(9.50) + \pi(7.50)^2/8$

$A = 93.34\ \text{ft}^2$

$F_V = \gamma_o A w = (0.85)(62.4)(93.34)(3.50)$

$\mathbf{F_V = 17328\ lb} = F_R$

$F_H = 0$ because horiz. forces are balanced

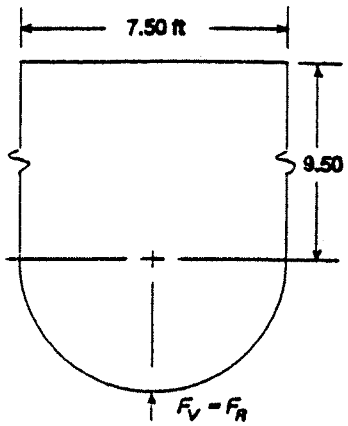

4.51 $s = R - y = 6.00 - 5.196 = 0.804$ m

$h_c = h + y + s/2 = 5.20 + 5.196 + 0.402$

$h_c = 10.798$ m

$F_H = \gamma s w h_c = (0.72)(9.81)(0.804)(4.00)(10.798)$

$\mathbf{F_H = 245.3\ kN}$

$$h_p = h_c + \frac{s^2}{12h_c} = 10.798 + \frac{0.804^2}{12(10.798)}$$

$h_p = 10.798 + 0.0050$ m

$\mathbf{h_p = 10.803\ m}$

$F_V = \gamma V = \gamma A w$

$A_1 = (5.20)(3.00) = 15.60\ \text{m}^2$

$$A_2 = \frac{1}{2}(3.00)(5.196) = 7.794\ \text{m}^2$$

$$A_3 = \pi R^2 \cdot \frac{30}{360} = \frac{\pi(6.0)^2}{12} = 9.425\ \text{m}^2$$

$A_T = A_1 + A_2 + A_3 = 32.819\ \text{m}^2$

$F_V = \gamma A w = (0.72)(9.81)(32.819)(4.00)$

$= \mathbf{927.2\ kN}$

$x_1 = 3.00/2 = 1.500$ m

$x_2 = 2(3.00)/3 = 2.00$ m

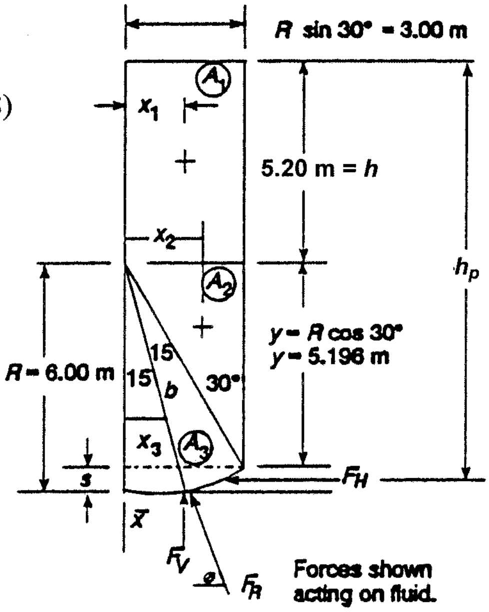

$$x_3 = b \sin 15° \text{ where } b = 38.197\frac{R \sin 15°}{15} = 3.954 \text{ m (from } \textit{Machinery's Handbook})$$

$x_3 = (3.954)\sin 15° = 1.023$ m

$$\bar{x} = \frac{A_1x_1 + A_2x_2 + A_3x_3}{A_T} = \mathbf{1.482\ m}$$

$$F_R = \sqrt{F_H^2 + F_V^2} = \sqrt{245.3^2 + 927.2^2} = \mathbf{959.1\ kN}$$

$$\phi = \tan^{-1}\frac{F_V}{F_H} = \tan^{-1}\frac{927.2}{245.3} = \mathbf{75.2°}$$

4.52 $F_V = \gamma A w$

$A = A_1 + A_2 = (1.20)(2.80) + \pi(1.20)^2/4 = 4.491 \text{ m}^2$

$F_V = (9.81 \text{ kN/m}^3)(4.491 \text{ m}^2)(1.50 \text{ m}) = \mathbf{66.1 \text{ kN}}$

$x_1 = 0.5(1.20) = 0.60 \text{ m}; x_2 = 0.424(1.20) = 0.509 \text{ m}$

$$\bar{x} = \frac{A_1 x_1 + A_2 x_2}{A_T} = \frac{(3.36)(.60) + (1.13)(0.509)}{4.491}$$

$= \mathbf{0.577 \text{ m}}$

$h_c = h + s/2 = 2.80 + 1.20/2 = 3.40 \text{ m}$

$F_H = \gamma s w h_c = (9.81)(1.20)(1.50)(3.40) = \mathbf{60.0 \text{ kN}}$

$$h_p = h_c + \frac{s^2}{12h_c} = 3.40 + \frac{(1.20)^2}{12(3.40)} = 3.435 \text{ m}$$

$$F_R = \sqrt{F_V^2 + F_H^2} = \sqrt{66.1^2 + 60.0^2} = \mathbf{89.3 \text{ kN}}$$

$$\phi = \tan^{-1}\frac{F_V}{F_H} = \tan^{-1}\frac{66.1}{60.0} = \mathbf{47.8°}$$

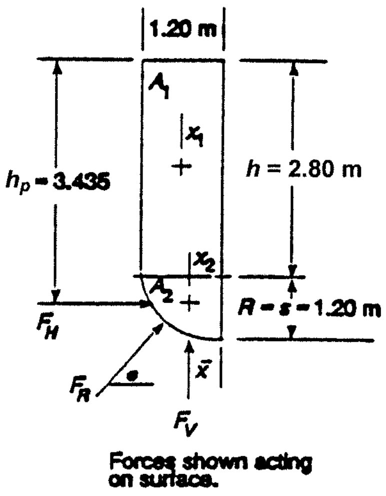

4.53 $$\left.\begin{array}{l} A_1 = (1.20)(2.80) = 3.36 \text{ m}^2 \\ A_2 = R^2 - \pi R^2/4 = 0.309 \text{ m}^2 \end{array}\right\} A = 3.669 \text{ m}^2$$

$F_V = \gamma A w = (9.81)(3.669)(1.50) = \mathbf{54.0 \text{ kN}}$

$x_1 = 1.20/2 = 0.60 \text{ m}$

$x_2 = 0.2234R = 0.268 \text{ m}$ [*Machinery's Handbook*]

$$\bar{x} = \frac{A_1 x_1 + A_2 x_2}{A} = \frac{(3.36)(0.60) + (0.309)(0.268)}{3.669}$$

$\bar{x} = \mathbf{0.572 \text{ m}}$

$h_c = h + s/2 = 2.80 + 0.60 = 3.40 \text{ m}$

$F_H = \gamma s w h_c = (9.81)(1.20)(1.50)(3.40) = \mathbf{60.0 \text{ kN}}$

$$h_p = h_c + \frac{s^2}{12h_c} = 3.40 + \frac{1.20^2}{12(3.40)} = \mathbf{3.435 \text{ m}}$$

$$F_R = \sqrt{F_V^2 + F_H^2} = \sqrt{54.0^2 + 60.0^2} = \mathbf{80.7 \text{ kN}}$$

$$\phi = \tan^{-1}\frac{F_V}{F_H} = \tan^{-1}\frac{54.0}{60.0} = \mathbf{42.0°}$$

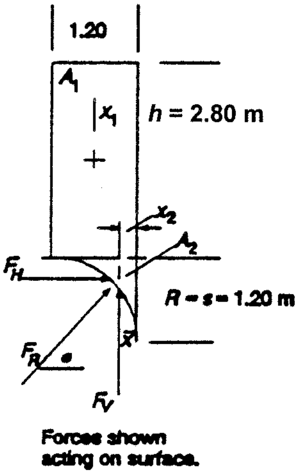

4.54 $A = \pi D^2/8 = \pi(36)^2/8 = 508.9 \text{ in}^2 = 3.534 \text{ ft}^2$

$F_V = \gamma A w = (0.79)(62.4)(3.534)(5.0) = \mathbf{871\ lb}$

$\bar{x} = 0.212D = 0.212(36 \text{ in}) = \mathbf{7.63\ in}$

$h_c = h + s/2 = 48 + 36/2 = 66.0 \text{ in} = 5.50 \text{ ft}$

$F_H = \gamma s w h_c = (0.79)(62.4)(3.0)(5.0)(5.50)$

$\mathbf{F_H = 4067\ lb}$

$$h_p = h_c = \frac{s^2}{12h_c} = 66 + \frac{36^2}{12(66)} = \mathbf{67.64\ in}$$

$$F_R = \sqrt{F_V^2 + F_H^2} = \sqrt{871^2 + 4067^2} = \mathbf{4159\ lb}$$

$$\phi = \tan^{-1}\frac{F_V}{F_H} = \tan^{-1}\frac{871}{4067} = \mathbf{12.1°}$$

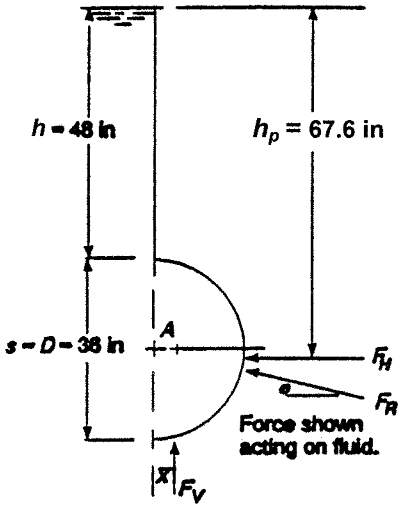

4.55 (See Prob. 4.47)

$$\text{Eq. Depth} = h_a = \frac{p}{\gamma} = \frac{7.5 \text{ kN/m}^2}{9.81 \text{ kN/m}^3} = 0.765 \text{ m}$$

$h_{1e} = h_1 + h_a = 1.85 + 0.765 = 2.615 \text{ m}$; $h_{ce} = h_{1e} + s/2 = 2.615 + 0.75/2 = 2.990 \text{ m}$

$A_1 = (0.75)(2.615) = 1.961 \text{ m}^2$; $A_2 = 0.442 \text{ m}^2$; $A_T = 2.403 \text{ m}^2$

$F_V = \gamma A w = (9.81)(2.403)(2.000) = \mathbf{47.15\ kN}$

$$\bar{x} = \frac{A_1 x_1 + A_2 x_2}{A_T} = \frac{(1.961)(0.375) + (0.442)(0.318)}{2.403} = \mathbf{0.365\ m}$$

$F_H = \gamma s w h_{ce} = (9.81)(0.75)(2.00)(2.99) = \mathbf{44.00\ kN}$

$$h_{pe} - h_{ce} = \frac{s^2}{12h_{ce}} = \frac{0.75^2}{12(2.99)} = 0.016 \text{ m} = \mathbf{16\ mm}$$

$$F_R = \sqrt{F_V^2 + F_H^2} = \sqrt{47.15^2 + 44.00^2} = \mathbf{64.49\ kN}$$

$$\phi = \tan^{-1}\frac{F_V}{F_H} = \tan^{-1}\frac{47.15}{44.00} = \mathbf{47.0°}$$

4.56 (See Prob. 4.48)

$$\text{Eq. Depth} = h_a = \frac{p}{\gamma} = \frac{4.65 \text{ kN/m}^2}{(0.826)(9.81 \text{ kN/m}^3)} = 0.574 \text{ m}$$

$h_{1e} = h_1 + h_a = 0.62 \text{ m} + 0.574 \text{ m} = 1.194 \text{ m}$

$A = (1.194)(1.25) + \pi(1.25)^2/8 = 2.106 \text{ m}^2$

$F_V = \gamma A w = (0.826)(9.81 \text{ kN/m}^3)(2.106 \text{ m}^2)(2.50 \text{ m}) = \mathbf{42.66\ kN} = F_R$

4.57 Net horizontal force = 0

From Section 4.11, net vertical force equals the weight of the displaced fluid acting upward and the weight of the cylinder acting downward.

$w_f = \gamma_f V_d = (62.4 \text{ lb/ft}^3)(0.164 \text{ ft}^3) = \mathbf{10.2\ lb}$

$$V_d = A \cdot L = \frac{\pi D^2}{4} \cdot L = \frac{\pi(6.00 \text{ in})^2}{4} \cdot 10.0 \text{ in} = 282.7 \text{ in}^3 \times \frac{\text{ft}^3}{1728 \text{ in}^3} = 0.164 \text{ ft}^3$$

$w_c = \gamma_c V = (0.284 \text{ lb/in}^3)(282.7 \text{ in}^3) = \mathbf{80.3\ lb}$

Net force on bottom = $w_c - w_f = 80.3 - 10.2 =$ **70.1 lb down**

4.58 See Prob. 4.57. $w_f = 10.2$ lb

$w_c = \gamma_c V = (0.100 \text{ lb/in}^3)(282.7 \text{ in}^3) = \mathbf{28.27\ lb}$

$F_{net} = w_c - w_f = 28.27 - 10.2 =$ **18.07 lb down**

4.59 See Prob. 4.57. $w_f = 10.2$ lb
$w_c = \gamma_c V = (30.0 \text{ lb/ft}^3)(0.164 \text{ ft}^3) = \mathbf{4.92\ lb}$
$F_{net} = w_c - w_f = 4.92 - 10.2 = \mathbf{5.28\ lb\ up}$
But this indicates that the cylinder would float, as expected. Then, the force exerted by the cylinder on the bottom of the tank is **zero**.

4.60 The specific weight of the cylinder must be less than or equal to that of the fluid if no force is to be exerted on the tank bottom.

4.61 (See Prob. 4.57.) Because the depth of the fluid does not affect the result, $\boldsymbol{F_{net}} = \mathbf{70.1\ lb}$ **down**. This is true as long as the fluid depth is greater than or equal to the diameter of the cylinder.

4.62 (See Prob. 4.57.) $w_c = 80.3$ lb
Force (downward) on upper part of cylinder = wt. of volume of cross-hatched volume. Force (upward) on lower part of cylinder = wt. of entire displaced volume **plus** that of cross-hatched volume. Then net force is wt. of displaced volume (upward).

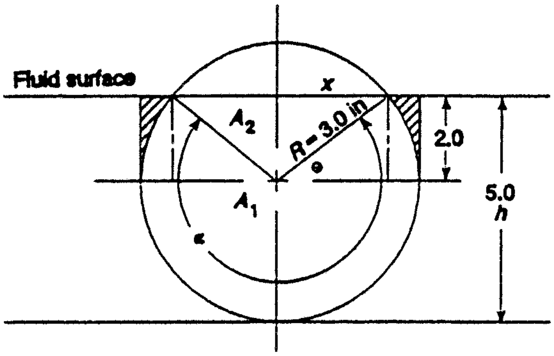

$w_f = \gamma_f V_d = \gamma_f A_d L$

$$A_d = \frac{\pi D^2}{4}\cdot\frac{\alpha}{360} + \frac{1}{2}(2x)(2.0) = A_1 + A_2$$

$$A_d = \frac{\pi(6.0\text{ in})^2}{4}\cdot\frac{263.6}{360} + (2.236)(2.0) = 25.18\text{ in}^2$$

$$w_f = \gamma_f A_d L = 62.4\text{ lb/ft}^3 \cdot 25.18\text{ in}^2 \cdot 10.0\text{ in} \cdot \frac{1\text{ ft}^3}{1728\text{ in}^3} = \mathbf{9.09\ lb}$$

$F_{net} = w_c - w_f = 80.3 - 9.09 = \mathbf{71.21\ lb\ down}$

4.63 (See Prob. 4.57) For any depth ≥ 6.00 in, $\boldsymbol{F_{net}}$ **= 70.1 lb down**
Method of Prob. 4.62 used for h < 6.00 in and ≥ 3.00 in. For any depth < 3.00 in, use figure below.

$$A_d = A_1 - A_2 = \frac{\pi D^2}{4} \times \frac{\beta}{360} - \frac{1}{2}(2x)(R-h)$$

$$F_{net} = w_c - w_f = 80.3\text{ lb} - \gamma_f A_d L$$

Summary of Results:

h (in)	F_{net} (lb)
6.00	70.1
5.50	70.5
5.00	71.2
4.50	72.08
4.00	73.07
3.50	74.12
3.00	75.19
2.50	76.27
2.00	77.32
1.50	78.30
1.00	79.18
0.50	79.89
0.00	80.30

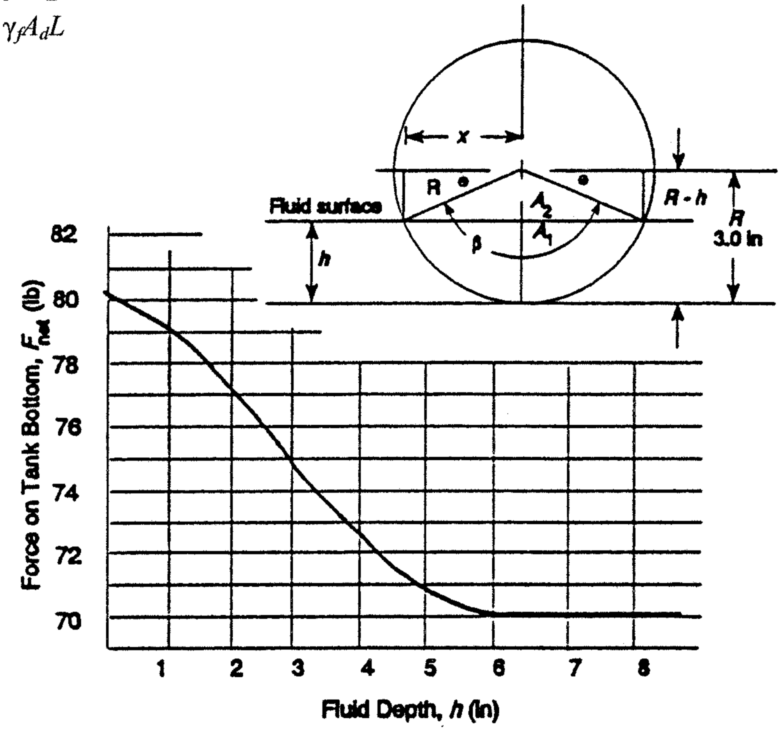

4.64 **Centroid**: $y = 0.212\,D = 0.212(36\text{ in}) = (7.63\text{ in})(1\text{ ft}/12\text{ in}) = 0.636\text{ ft}$
$x = (20\text{ in})/\sin 25° = 47.32\text{ in}$
$L_c = 60\text{ in} + x - y = 60 + 47.32 - 7.632 = (99.69\text{ in})(1\text{ ft}/12\text{ in}) = 8.308\text{ ft}$
$h_c = L_c \sin 25° = (8.308\text{ ft})(\sin 25°) = 3.511\text{ ft}$
$A = \pi D^2/8 = \pi(3.0\text{ ft})^2/8 = 3.534\text{ ft}^2$
$F_R = \gamma h_c A = (1.06)(62.4\text{ lb/ft}^3)(3.511\text{ ft})(3.534\text{ ft}^2) =$ **820 lb** $= F_R$
$I = 6.86 \times 10^{-3} D^4 = 6.86 \times 10^{-3}(3.00\text{ ft})^4 = 0.556\text{ ft}^4$
$L_p - L_c = I/[L_c A] = (0.556\text{ ft}^4)/[(8.308\text{ ft})(3.534\text{ ft}^2)] = 0.0189\text{ ft}$
$L_p = L_c + 0.0189\text{ ft} = 8.308\text{ ft} + 0.0189\text{ ft} =$ **8.327 ft** $= L_p$

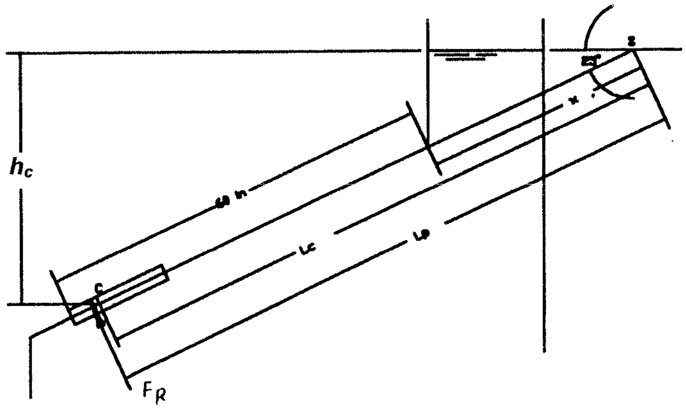

CHAPTER FIVE

BUOYANCY AND STABILITY

Buoyancy

5.1 $\Sigma F_V = 0 = w + T - F_b$

$F_b = \gamma_f V = (10.05 \text{ kN/m}^3)(0.45)(0.60)(0.30)\text{m}^3 = 0.814 \text{ kN} = \mathbf{814\ N}$

$T = F_b - w = 814 - 258 = \mathbf{556\ N}$

5.2 If both concrete block and sphere are submerged:

Upward forces $= F_U = F_{b_s} + F_{b_C} = \gamma_w V_s + \gamma_w V_C = \gamma_w(V_s + V_C)$

$$\left.\begin{array}{l} V_s = \pi D^3/6 = \pi(1.0\text{ m})^3/6 = 0.5236\text{ m}^3 \\ V_C = \dfrac{w_C}{\gamma_C} = \dfrac{4.10\text{ kN}}{23.6\text{ kN/m}^3} = 0.1737\text{ m}^3 \end{array}\right\} = V_{\text{tot}} = 0.6973\text{ m}^3$$

$$\left.\begin{array}{l} F_U = \gamma_w V_{\text{tot}} = (9.81\text{ kN/m}^3)(0.6973\text{ m}^3) = \mathbf{6.84\ kN} \\ \text{Downward forces} = F_D = w_C + w_S = 4.1 + 0.20 = \mathbf{4.30\ kN} \end{array}\right\} F_U > F_D \text{ It will float.}$$

5.3 If pipe is submerged, $F_b = \gamma_f V = (1.26)(9.81\text{ kN/m}^3)(\pi(0.168\text{ m})^2/4)(1.00\text{ m})$

$F_b = 0.2740$ kN = 274 N; because $w = 277\text{ N} > F_b$—It will **sink.**

5.4 $w_c - F_b = 0;\ w_c = F_b;\ \gamma_c V_c = \gamma_f V_d = \gamma_f\, 0.9\, V_c$

Then, $\gamma_c = 0.9\gamma_f = (0.90)(1.10)(62.4\text{ lb/ft}^3) = \mathbf{61.78\ lb/ft^3}$

5.5 $w_c - F_b = 0;\ \gamma_c V_c - \gamma_f V_d$

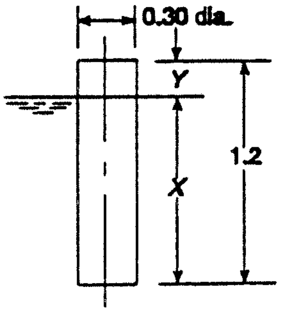

$$V_d = V_c\,\frac{\gamma_c}{\gamma_f}$$

$$= \frac{\pi(.30\text{ m})^2}{4}\cdot 1.2\text{ m}\cdot\frac{7.90}{9.81} = 0.0683\text{ m}^3 = \frac{\pi D^2}{4}\bullet X$$

$$X = \frac{4(0.0683)\text{ m}^3}{\pi(0.30\text{ m})^2} = 0.9664\text{ m} = \mathbf{966\ mm}$$

$$Y = 1200 - 966 = \mathbf{234\ mm}$$

5.6 $w - F_b = 0 = \gamma_c V_c - \gamma_f V_d$

$$\gamma_c = \gamma_f\,\frac{V_d}{V_c} = (0.90)(9.81\text{ kN/m}^3)(75/100) = \mathbf{6.62\ kN/m^3}$$

5.7 $w - F_b - T = 0 = \gamma_C V_C - \gamma_f V_C - T = V_C(\gamma_C - \gamma_f) - T$

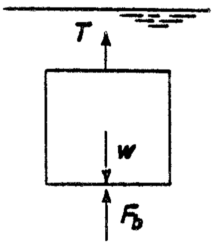

$$V_C = \frac{T}{(\gamma_C - \gamma_f)} = \frac{2.67\text{ kN}}{[23.6 - (1.15)(9.81)]\text{kN/m}^3} = \mathbf{0.217\ m^3}$$

5.8 $w - F_b - F_{SP} = 0 = W - \gamma_o V_d - F_{SP}$

$F_{SP} = w - \gamma_o V_d = 14.6 \text{ lb} - (0.90)(62.4 \text{ lb/ft}^3)(40 \text{ in}^3) \dfrac{1 \text{ ft}^3}{1728 \text{ in}^3}$

$F_{SP} = \mathbf{13.3\ lb}$

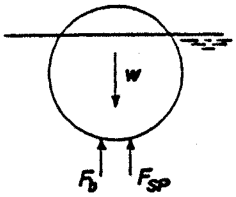

5.9 $\Sigma F_V = 0 = w_F + w_S - F_{b_F} - F_{b_S}$

$F_{b_S} = \gamma_w V_S = 9.81 \text{ kN/m}^3 \times (0.100 \text{ m})^3 = 9.81 \text{ N}$

$0 = \gamma_F V_F + 80 \text{ N} - \gamma_w V_F - 9.81 \text{ N}$

$0 = V_F(\gamma_F - \gamma_w) + 70.19 \text{ N}$

$$V_F = \frac{-70.19 \text{ N}}{\gamma_F - \gamma_w} = \frac{-70.19 \text{ N}}{(470 - 9810) \text{ N/m}^3}$$

$= \mathbf{7.515 \times 10^{-3}\ m^3}$

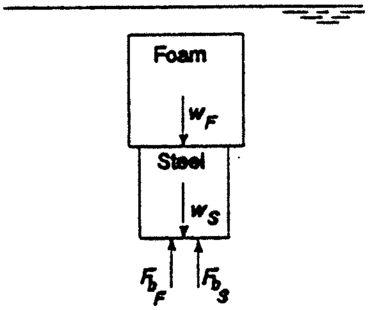

5.10 $w_c + w_A = F_b = \gamma_w V_c = 62.4 \text{ lb/ft}^3 \cdot \dfrac{\pi(2)^2}{4} \cdot 3 \text{ ft}^3 = 588.1 \text{ lb}$

$w_A = F_b - w_c = 588.1 - 30 = 558.1 \text{ lb} = \gamma_A V_A$

$$V_A = \frac{w_A}{\gamma_A} = \frac{558.1 \text{ lb in}^3}{0.100 \text{ lb}} \cdot \frac{1 \text{ ft}^3}{1728 \text{ in}^3} = \mathbf{3.23\ ft^3}$$

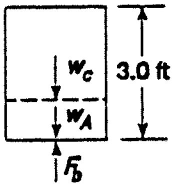

5.11 $w_c + w_A - F_{b_c} - F_{b_A} = 0$

$w_A - F_{b_A} = F_{b_c} - w_c = 588.1 - 30 = 558.1 \text{ lb}$ (See Prob 5.10)

$\gamma_A V_A - \gamma_w V_A = 558.1 \text{ lb}$

$\gamma_A = (0.100 \text{ lb/in}^3)(1728 \text{ in}^3/\text{ft}^3) = 172.8 \text{ lb/ft}^3$

$$V_A = \frac{558.1 \text{ lb}}{\gamma_A - \gamma_w} = \frac{558.1 \text{ lb}}{(172.8 - 62.4) \text{lb/ft}^3} = \mathbf{5.055\ ft^3}$$

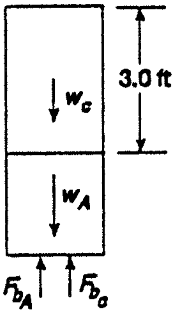

5.12 $w_c - F_b = 0 = \gamma_c V_c - \gamma_f V_d = \gamma_c S^3 - \gamma_f S^2 X$

$$X = \frac{\gamma_c S^3}{\gamma_f S^2} = \frac{\gamma_c S}{\gamma_f}$$

5.13 $w_H + w_S - F_b = 0$

$$F_b = \gamma_w(V_1 + V_2) = 62.4 \text{ lb/ft}^3 \left[\frac{\pi(1.0)^2}{4} \cdot 1.50 + \frac{\pi(.25)^2}{4} \times 1.30\right] \frac{\text{in}^3 \text{ ft}^3}{1728 \text{ in}^3}$$

$= 0.04485 \text{ lb}$

$w_S = F_b - w_H = 0.04485 - 0.020 = \mathbf{0.02485\ lb}$

5.14 From Prob. 5.13: $w_H + w_S = 0.02 + 0.02485 = 0.04485 \text{ lb} = w = F_b$

$$w = F_b = \gamma_F V_d = \gamma_f(V_1 + V_2) = \gamma_f\left[\frac{\pi(1.0)^2}{4}\cdot 1.50 + \frac{\pi(0.25)^2}{4}\cdot 2.30\right]\frac{\text{in}^3\ \text{ft}^3}{1728\ \text{in}^3}$$

$$= \gamma_f(7.47 \times 10^{-4}\ \text{ft}^3)$$

$$\gamma_f = \frac{w}{V_d} = \frac{0.04485\ \text{lb}}{7.47\times10^{-4}\ \text{ft}^3} = 60.03\ \text{lb/ft}^3;\ \text{sg} = \frac{\gamma_f}{\gamma_w} = 60.03/62.40 = \mathbf{0.962}$$

5.15 $$V_d = V_1 + V_2 = \left[\frac{\pi(1.0)^2}{4}\cdot 1.50 + \frac{\pi(0.25)^2}{4}\cdot 0.30\right]\frac{\text{in}^3\ \text{ft}^3}{1728\ \text{in}^3} = 6.903 \times 10^{-4}\ \text{ft}^3$$

$$\gamma_f = \frac{w}{V_d} = \frac{0.04485\ \text{lb}}{6.903\times10^{-4}\ \text{ft}^3} = 64.97\ \text{lb/ft}^3;\ \text{sg} = \frac{\gamma_f}{\gamma_w} = 64.97/62.4 = \mathbf{1.041}$$

5.16 $w_B + w_C - F_{b_B} - F_{b_C} = 0$

$w_C = F_{b_B} + F_{b_C} - w_B$

$$w_B = \gamma_B \cdot V_B = 8.00\ \text{lb/ft}^3\left[\frac{\pi(1.00)^2}{4}\cdot 3.0 + \frac{\pi(1.00)^3}{6}\right]\text{ft}^3$$

$$= 23.04\ \text{lb}$$

$$F_{b_C} = \gamma_f V_C = 64.0\ \text{lb/ft}^3\left[\frac{\pi(2.0)^2(3.0)}{12}\text{ft}^3\right] = 201.06\ \text{lb}$$

$$F_{b_B} = \gamma_f V_d = 64.0\ \text{lb/ft}^3\left[\frac{\pi(1.0)^2}{4}\cdot 2.00 + \frac{\pi(1.0)^3}{12}\right]\text{ft}^3$$

$$= 117.29\ \text{lb}$$

$w_C = 117.29 + 201.06 - 23.04 = \mathbf{295.31\ lb}$

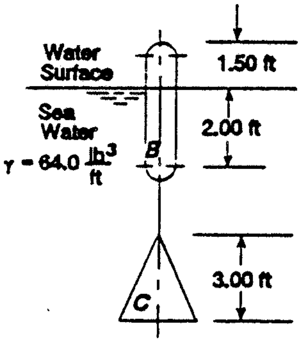

5.17 $S = 18.00\ \text{in}(1\ \text{ft}/12\ \text{in}) = 1.50\ \text{ft}$

$w - F_b - F_e = 0$

$F_e = w - F_b = \gamma_S V_C - \gamma_w V_C = V_C(\gamma_S - \gamma_w)$

$F_e = (1.50)^3\ \text{ft}^3\ (491 - 62.4)\ \text{lb/ft}^3 = \mathbf{1447\ lb} \uparrow$

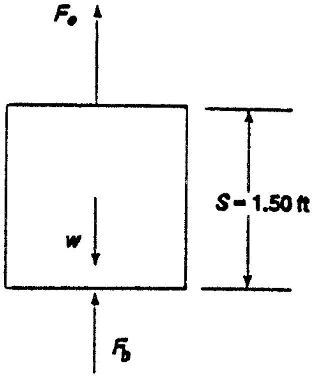

5.18 $\gamma_m = 844.9\ \text{lb/ft}^3 > \gamma_w$ - cube would tend to float.

$w - F_b + F_e = 0$

$F_e = F_b - w = \gamma_m V_C - \gamma_S V_C = V_C(\gamma_m - \gamma_S) = (1.50)^3\ \text{ft}^3(844.9 - 491)\text{lb/ft}^3 = \mathbf{1194\ lb} \downarrow$

5.19 $w - F_b = 0 = w - \gamma_{SW} V_d$

$$V_d = \frac{w}{\gamma_{SW}} = \frac{292\times10^6\ \text{gm}}{10.10\ \text{kN/m}^3}\times\frac{9.81\ \text{m}}{\text{s}^2}\times\frac{\text{kg}}{10^3\ \text{gm}}\times\frac{1\ \text{N}}{\text{kg m/s}^2}\times\frac{1\ \text{kN}}{10^3\ \text{N}} = \mathbf{283.6\ m^3}$$

5.20 $w = F_b;\ \gamma_I V_I = \gamma_{SW} V_d$

$$V_d = V_I \frac{\gamma_I}{\gamma_{SW}} = V_I \cdot \frac{8.72\ \text{kN/m}^3}{10.10\ \text{kN/m}^3} = V_I \cdot \mathbf{0.863;\ 86.3\%\ submerged;\ 13.7\%\ above}$$

5.21 $w = F_b;\ \gamma_{\text{wood}} V_T = \gamma_w V_d$

$$\gamma_{\text{wood}} = \gamma_w \frac{V_d}{V_T}$$

$$V_T = \frac{\pi D^2}{4} \cdot L = \frac{\pi(.450)^2}{4} \cdot 6.750 = 1.074\ \text{m}^3$$

$$V_d = \left[\frac{\pi D^2}{4} \cdot \frac{\beta}{360} + \frac{1}{2}(2X)(.115)\right] L$$

$$V_d = \left[\frac{\pi(.45)^2}{4} \cdot \frac{241.5}{360} + (.1934)(.115)\right] 6.75\ \text{m}^3$$

$$= 0.8703\ \text{m}^3$$

$$\gamma_{\text{wood}} = (9.81\ \text{kN/m}^3)(.8703/1.074) = \mathbf{7.95\ kN/m^3}$$

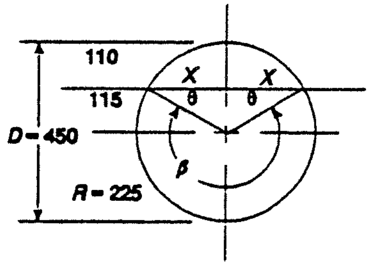

$\theta = \sin^{-1}\frac{115}{225} = 30.74°$
$\beta = 180 + 2\theta = 241.5°$
$X = R\cos\theta = .225\cos 30.74°$
$X = 0.1934$ m

5.22 $w - F_b = 0 = \gamma_C V_C - \gamma_K V_d$

$$\gamma_C = \gamma_K \frac{V_d}{V_C} = 8.07\ \text{kN/m}^3 \cdot \frac{A \cdot 600\ \text{mm}}{A \cdot 750\ \text{mm}} = 6.46\ \text{kN/m}^3$$

5.23 $w - F_b = 0 = \gamma_c V_c - \gamma_w V_d = \gamma_c A{\cdot}L - \gamma_w A{\cdot}X$

$$X = \frac{\gamma_c A \cdot L}{\gamma_w A} = \frac{6.46\ \text{kN/m}^3}{9.44\ \text{kN/m}^3} \cdot 750\ \text{mm} = 513\ \text{mm}$$

$$h = L - X = 750 - 513 = 237\ \text{mm}$$

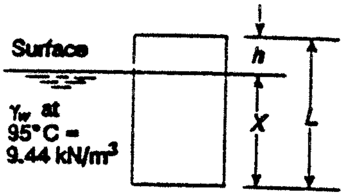

5.24 $w_c - F_{b_c} + w_B - F_{b_B} = 0$

$$\gamma_c V_c - \gamma_w V_c + \gamma_B V_B - \gamma_w V_B = 0$$

$$\gamma_c A{\cdot}L - \gamma_w A{\cdot}L + \gamma_B A{\cdot}t - \gamma_w A{\cdot}t = 0$$

$$t(\gamma_B - \gamma_w) = L(\gamma_w - \gamma_c)$$

$$t = L\frac{\gamma_w - \gamma_c}{\gamma_B - \gamma_w} = 750\ \text{mm}\ \frac{(9.44 - 6.46)\text{kN/m}^3}{(84.0 - 9.44)\text{kN/m}^3} = \mathbf{30.0\ mm}$$

5.25 γ_w at 15°C = 9.81 kN/m³—it would float.

$$w_c - F_{b_c} + w_B - F_{b_B} = 0$$

$$w_c = \gamma_c V_c = 6.46\ \text{kN/m}^3 \times \frac{\pi(.45)^2}{4} \times .75\ \text{m}^3$$

$$= 0.771\ \text{kN}$$

$$w_B = \gamma_B V_B = 84.0\ \text{kN/m}^3 \times \frac{\pi(.45)^2}{4} \times .030\ \text{m}^3$$

$$= 0.4008\ \text{kN}$$

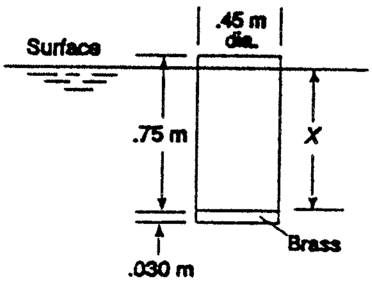

$$F_{b_B} = \gamma_w V_B = 9.81 \text{ kN/m}^3 \times \frac{\pi(.45)^2}{4} \times .03 \text{ m}^3$$
$$= 0.0468 \text{ kN}$$
$$F_{b_C} = \gamma_w V_d = w_C + w_B - F_{b_B} = 0.771 + 0.4008 - 0.0468 = 1.125 \text{ kN}$$
$$F_{b_C} = \gamma_w V_d = \gamma_w AX$$
$$X = \frac{F_{b_C}}{\gamma_w A} = \frac{1.125 \text{ kN}}{(9.81 \text{ kN/m}^3)\left(\pi(.45)^2\text{m}^2/4\right)} = \mathbf{0.721\ m} \text{ submerged} = 721 \text{ mm}$$

29 mm above surface

5.26 $\gamma_{CT} = 15.60 \text{ kN/m}^3$

$$w_c - F_{b_c} + w_B - F_{b_B} = 0$$
$$w_c = \gamma_c V_c = 6.50 \text{ kN/m}^3 \times \frac{\pi(.45)^2}{4} \times .75 \text{ m}^3 = 0.7753 \text{ kN}$$
$$F_{b_c} = \gamma_{CT} V_d = 15.60 \text{ kN/m}^3 \times \frac{\pi(.45)^2}{4} \times .70 \text{ m}^3 = 1.737 \text{ kN}$$
$$w_B - F_{b_B} = \gamma_B V_B - \gamma_{CT} V_B = V_B(\gamma_B - \gamma_{CT}) = F_{b_c} - w_c = 1.737 - 0.7753$$
$$= 0.9614 \text{ kN}$$
$$V_B = \frac{0.9614 \text{ kN}}{\gamma_B - \gamma_{CT}} = \frac{0.9614 \text{ kN}}{(84.0 - 15.60) \text{ kN/m}^3} = 0.01406 \text{ m}^3 = At$$
$$t = \frac{V_B}{A} = \frac{0.01406 \text{ m}^3}{\pi(0.45)^2/4 \text{ m}^2} = 0.0884 \text{ m} = \mathbf{88.4\ mm}$$

5.27 $w = F_b = \gamma_f V_d = (1.16)(9.81 \text{ kN/m}^3)(0.8836 \text{ m}^3) = \mathbf{10.05\ kN}$

$V_d = \pi D^3/12 = \pi(1.50 \text{ m})^3/12 = 0.8836 \text{ m}^3$

Entire hemisphere is submerged.

5.28 $w = F_b = \gamma_f V_d = \gamma_w \cdot A \cdot X$

$$X = \frac{w}{\gamma_w A} = \frac{0.05 \text{ N} \quad 4}{(9.81 \text{ kN/m}^3)\left(\pi(0.082 \text{ m})^2\right)} \times \frac{\text{kN}}{10^3 \text{ N}} = 0.965 \times 10^{-3} \text{ m} = \mathbf{0.965\ mm}$$

5.29 Wt. of steel bar $= w_S = \gamma_S V_S = \gamma_S AL = \gamma_S \frac{\pi D^2}{4} L$

$$w_S = 76.8 \text{ kN/m}^2 \cdot \frac{\pi(.038 \text{ m})^2}{4} \cdot 0.08 \text{ m} \cdot \frac{10^3 \text{ N}}{\text{kN}} = 6.97 \text{ N}$$
$$w_S + w_C = 6.97 + 0.05 = 7.02 \text{ N} = F_b = \gamma_w AX$$
$$X = \frac{w_T}{\gamma_w A} = \frac{7.02 \text{ N}}{(9.81 \text{ kN/m}^3)} \cdot \frac{4}{\pi(0.082 \text{ m})^2} \cdot \frac{1 \text{ kN}}{10^3 \text{ N}} = 0.135 \text{ m} = \mathbf{135\ mm}$$

5.30 From Prob. 5.29, $w_T = 7.02$ N

$$V_S = \frac{\pi D^2}{4} \cdot L = \frac{\pi(.038\text{ m})^2}{4} \cdot 0.080\text{ m} = 9.073 \times 10^{-5}\text{ m}^3$$

$$F_{b_S} = \gamma_w V_S = 9.81\text{ kN/m}^3 \times 9.073 \times 10^{-5}\text{ m}^3 \times 10^3\text{ N/kN} = 0.890\text{ N}$$

$$w_T - F_{b_S} - F_{b_C} = 0$$

$$F_{b_C} = w_T - F_{b_S} = 7.02\text{ N} - 0.890\text{ N} = 6.13\text{ N} = \gamma_w AX$$

$$X = \frac{6.13\text{ N}}{9.81\text{ kN/m}^3} \times \frac{4}{\pi(0.082\text{ m})^2} \times \frac{1\text{ kN}}{10^3\text{ N}} = 0.118\text{ m} = \mathbf{118\text{ mm}}$$

5.31 $$w_T = F_b = 4\gamma_w V_{\text{drum}} = 4(62.4\text{ lb/ft}^3)\frac{\left(\pi(21\text{ in})^2\right)}{4}\frac{(36\text{ in})}{1728\text{ in}^3}\text{ft}^3 = 1801\text{ lb}$$

Drums Weigh 4(30 lb) = 120 lb

Wt. of platform and load = 1801 – 120 = **1681 lb**

5.32 Vol. of Wood:

Vol. of Wood:	2(6.0 ft)(1.50 in)(5.50 in)(1 ft^2/144 in^2)	= 0.6875 ft^3 ends
	4(96 – 3)in(1.50 in)(5.50 in)(1 ft^3/1728 in^3)	= 1.776 ft^3 main boards
	(0.50 in)(6 ft)(8 ft)(1 ft/12 in)	= <u>2.000 ft^3</u> plywood
		4.464 ft^3 total

$$w_w = \gamma_w V = (40.0\text{ lb/ft}^3)(4.464\text{ ft}^3) = \mathbf{178.5\text{ lb}}$$

5.33 $w_D + w_P = F_b = \gamma_w V_d$

$$V_d = \frac{w_D + w_P}{\gamma_w} = \frac{120\text{ lb} + 178.5\text{ lb}}{62.4\text{ lb/ft}^3} = 4.78\text{ ft}^3\text{ total}$$

$V_D = 4.78/4 = 1.196\text{ ft}^3$ sub. each drum

$V_D = A_S \cdot L$

$$A_S = \frac{V_D}{L} = \frac{1.196\text{ ft}^3}{3.0\text{ ft}} = 0.399\text{ ft}^2 \times \frac{144\text{ in}^2}{\text{ft}^2} = 57.4\text{ in}^2$$

By trial: $\boldsymbol{X} = \mathbf{4.67}$ **in** when $A_S = 57.4\text{ in}^2$

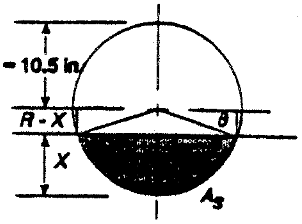

See Prob. 4.63 for method of computing A_S.

5.34 $$w_{\text{drums}} + w_{\text{wood}} + w_{\text{load}} - F_{b_D} - F_{b_w} = 0$$

$w_{\text{drums}} = 4(30\text{ lb}) = 120$ lb (Prob. 5.31)

$w_{\text{wood}} = 178.5$ lb (Prob. 5.32)

$F_{b_D} = 1801$ lb (Prob. 5.31)

$F_{b_w} = \gamma_w V_w = 62.4\text{ lb/ft}^3 \times 4.464\text{ ft}^3 = 278.6$ lb (Prob. 5.32)

$$w_{\text{load}} = F_{b_D} + F_{b_w} - w_D - w_w = 1801 + 278.6 - 120 - 178.5 = \mathbf{1781\text{ lb}}$$

5.35 Given: $\gamma_F = 12.00\ \text{lb/ft}^3$, $\gamma_C = 150\ \text{lb/ft}^3$, $w_C = 600$ lb
Find: Tension in cable

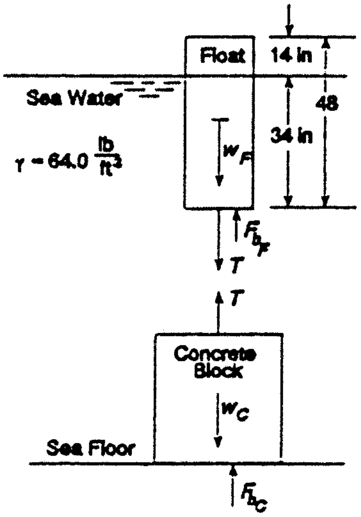

Float only: $\Sigma F_V = 0 = w_F + T - F_{b_F}$

$T = F_{b_F} - w_F$

But $w_F = \gamma_F V_F = 12.0\ \text{lb/ft}^3 \times 9.0\ \text{ft}^3 = 108$ lb

$$V_F = \frac{(18.0\ \text{in})^2(48\ \text{in})}{1728\ \text{in}^3/\text{ft}^3} = 9.00\ \text{ft}^3$$

$F_{b_F} = \gamma_w V_d = (64.0\ \text{lb/ft}^3)(6.375\ \text{ft}^3) = 408$ lb

$$V_d = \frac{(18.0\ \text{in})^2(34\ \text{in})}{1728\ \text{in}^3/\text{ft}^3} = 6.375\ \text{ft}^3$$

$T = 408 - 108 =$ **300 lb**

Check concrete block: $F_{\text{net}} = w_C - F_{b_C} - T$

$$w_C = 600\ \text{lb};\ V_C = \frac{w_C}{\gamma_C} = \frac{600\ \text{lb}}{150\ \text{lb/ft}^3} = 4.00\ \text{ft}^3$$

$F_{b_C} = \gamma_w V_C = (64.0\ \text{lb/ft}^3)(4.00\ \text{ft}^3) = 256$ lb

$F_{\text{net}} = 600 - 256 - 300 = 44$ lb down—OK—block sits on bottom.

5.36 Rise of water level by 18.00 in would tend to submerge entire float. But additional buoyant force on float is sufficient to lift concrete block off sea floor.

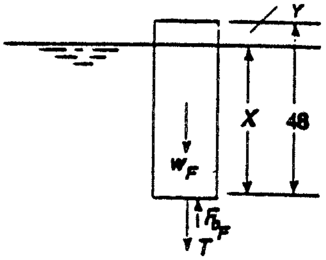

With block suspended: $T = w_C - F_{b_C}$

$T = 600 - 256 = 344$ lb (see Problem 5.35)

Float: $w_F + T - F_{b_F} = 0$

$F_{b_F} = w_F + T = 108\ \text{lb} + 344\ \text{lb} = 452\ \text{lb} = \gamma_w V_d$

$$V_d = \frac{F_{b_F}}{\gamma_w} = \frac{452\ \text{lb}}{64.0\ \text{lb/ft}^3} = 7.063\ \text{ft}^3 \times \frac{1728\ \text{in}^3}{\text{ft}^3} = 12204\ \text{in}^3$$

$V_d = (18.0\ \text{in})^2(X)$

$$X = \frac{V_d}{(18.0\ \text{in})^2} = \frac{12204\ \text{in}^3}{324\ \text{in}^2} = 37.67\ \text{in submerged}$$

$Y = 48 - X = 10.33$ in above surface

With concrete block suspended, float is unrestrained and it would drift with the currents.

5.37 $\Sigma F_V = 0 = w_A - F_{b_w} - F_{b_o} - T$

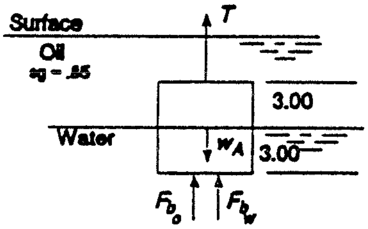

$T = w_A - F_{b_w} - F_{b_o}$

$$w_A = \gamma_A V_T = \frac{0.10\ \text{lb}}{\text{in}^3} \times (6.0\ \text{in})^3 = 21.6\ \text{lb}$$

$$F_{b_w} = \gamma_w V_{d_w} = 62.4\ \text{lb/ft}^3 \times \frac{(6\ \text{in})^2(3.0\ \text{in})}{1728\ \text{in}^3/\text{ft}^3} = 3.90\ \text{lb}$$

$F_{b_o} = \gamma_o V_{d_o} = 0.85 F_{b_w} = 3.315$ lb

Then: $T = 21.6 - 3.90 - 3.315 =$ **14.39 lb**

5.38 $F_S = w_c - F_{b_c} = \gamma_c V_c - \gamma_f V_c = V_c(\gamma_c - \gamma_f)$

$$V_c = \frac{\pi D^2}{4} \cdot L = \frac{\pi(6.0\ \text{in})^2}{4} \times 10.0\ \text{in} \times \frac{\text{ft}^3}{1728\ \text{in}^3}$$

$= 0.1636\ \text{ft}^3$

$$F_S = 0.1636\ \text{ft}^3 \left(\frac{0.284\ \text{lb}}{\text{in}^3} \times \frac{1728\ \text{in}^3}{\text{ft}^3} - \frac{62.4\ \text{lb}}{\text{ft}^3} \right)$$

$=$ **70.1 lb**

F_S acts **up** on cylinder; **down** on tank bottom

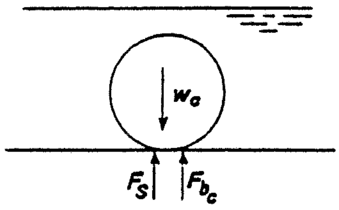

Stability

5.39 $w - F_b = 0$

$\gamma_c V_c = \gamma_f V_d = \gamma_f A X$

$$X = \frac{\gamma_c V_c}{\gamma_f A} = \frac{\gamma_c A(1.0\ \text{m})}{\gamma_f A} = \frac{8.00\ \text{kN/m}^3/(1.0\ \text{m})}{9.81\ \text{kN/m}^3}$$

$= 0.8155$ m

$y_{cg} = 1.00\ \text{m}/2 = 0.500$ m

$y_{cb} = X/2 = 0.8155\ \text{m}/2 = 0.4077$ m

$$\text{MB} = \frac{I}{V_d} = \frac{\pi D^4/64}{(\pi D^2/4)(X)} = \frac{\pi(1.0\ \text{m})^4/64}{\left[\pi(1.0\ \text{m})^2/4\right](0.8155\ \text{m})}$$

$$= \frac{0.04909\ \text{m}^4}{0.6405\ \text{m}^3} = 0.0766\ \text{m}$$

$y_{mc} = y_{cb} + \text{MB} = 0.4077 + 0.0766 =$ **0.4844 m** $< y_{cg}$**—unstable**

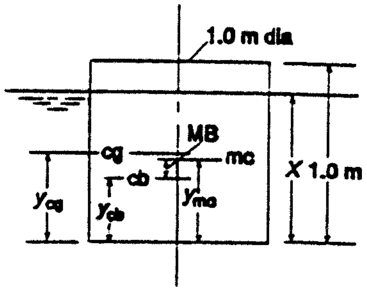

5.40 $w = F_b = \gamma_w V_d = \gamma_w A X$

$$X = \frac{w}{\gamma_w A} = \frac{250\ \text{lb}(144\ \text{in}^2/\text{ft}^2)}{(62.4\ \text{lb/ft}^3)(30\ \text{in})(40\ \text{in})} = 0.4808\ \text{ft}$$

$X = 5.77$ in; $y_{cb} = X/2 = 2.88$ in

$I = (40\ \text{in})(30\ \text{in})^3/12 = 90000\ \text{in}^4$

$V_d = AX = (30\ \text{in})(40\ \text{in})(5.77\ \text{in}) = 6923\ \text{in}^3$

$\text{MB} = I/V_d = 90000\ \text{in}^4/6923\ \text{in}^3 = 13.0$ in

$y_{mc} = y_{cb} + \text{MB} = 2.88\ \text{in} + 13.0\ \text{in}$

$=$ **15.88 in** $> y_{cg}$**—stable**

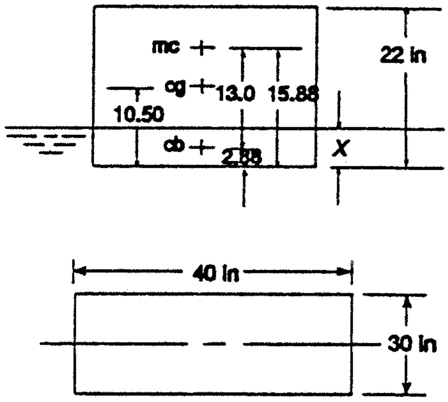

Cross section at fluid surface.

5.41 $w = F_b = \gamma_{sw}V_d = \gamma_{sw}AX$

$$X = \frac{w}{\gamma_{sw}A} = \frac{450000\ \text{lb}}{(64.0\ \text{lb/ft}^3)(20\ \text{ft})(50\ \text{ft})}$$

$= 7.031$ ft

$y_{cb} = X/2 = 3.516$ ft

$I = (50)(20)^3/12 = 3.333 \times 10^4\ \text{ft}^4$

$V_d = AX = (20)(50)(7.031)\text{ft}^3 = 7031\ \text{ft}^3$

$\text{MB} = I/V_d = 4.741$ ft

$y_{mc} = y_{cb} + \text{MB} = 3.516 + 4.741$

$= \mathbf{8.256\ ft} > y_{cg}$**—stable**

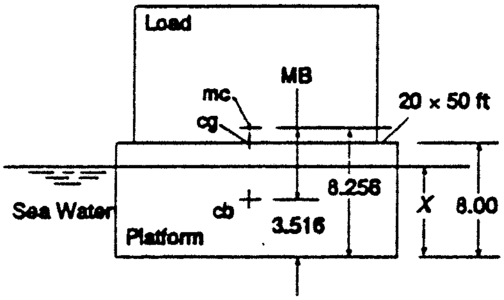

5.42 From Prob. 5.4; $X = 0.9 \quad H = 0.9(12) = 10.8$ in

$y_{cb} = X/2 = 5.40$ in

$y_{cg} = H/2 = 6.00$ in

$I = \pi D^4/64 = \pi(10.0\ \text{in})^4/64 = 490.9\ \text{in}^4$

$V_d = (\pi D^2/4)(X) = [\pi(10.0\ \text{in})^2/4](10.80\ \text{in}) = 848.2\ \text{in}^3$

$\text{MB} = I/V_d = 490.9/848.2 = 0.579$ in

$y_{mc} = y_{cb} + \text{MB} = 5.40 + 0.579 = \mathbf{5.98\ in} < y_{cg}$**—unstable**

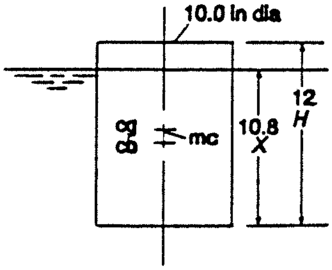

5.43 From Prob. 5.5: $X = 966$ mm

$y_{cb} = X/2 = 483$ mm

$y_{cg} = H/2 = 1200/2 = 600$ mm

$I = \pi D^4/64 = \pi(300\ \text{mm})^4/64 = 3.976 \times 10^8\ \text{mm}^4$

$V_d = (\pi D^2/4)(X) = [\pi(300\ \text{mm})^2/4](966\ \text{mm}) = 6.828 \times 10^7\ \text{mm}^3$

$\text{MB} = I/V_d = 5.82$ mm

$y_{mc} = y_{cb} + \text{MB} = 483 + 5.8 = \mathbf{488.8\ mm} < y_{cg}$**—unstable**

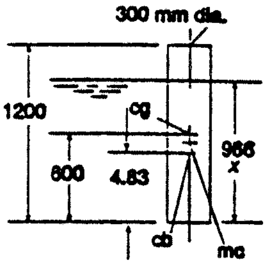

5.44 From Prob. 5.6: $X = 75$ mm

$y_{cb} = X/2 = 37.5$ mm

$y_{cg} = H/2 = 100/2 = 50.0$ mm

$I = H^4/12 = (100\ \text{mm})^4/12 = 8.333 \times 10^6\ \text{mm}^4$

$V_d = (H^2)(X) = (100\ \text{mm})^2(75\ \text{mm}) = 7.50 \times 10^5\ \text{mm}^3$

$\text{MB} = I/V_d = 11.11$ mm

$y_{mc} = y_{cb} + \text{MB} = 37.5 + 11.11$

$= \mathbf{48.61\ mm} < y_{cg}$**—unstable**

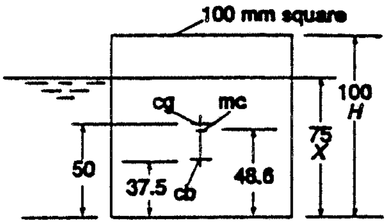

5.45 $w = F_b = \gamma_w V_d = \gamma_w AX$

$$X = \frac{w}{\gamma_w A} = \frac{70.0\ \text{lb}}{(62.4\ \text{lb/ft}^3)\left(\pi(2.0\ \text{ft})^2/4\right)}$$

$= 0.357\ \text{ft}(12\ \text{in/ft}) = 4.28$ in

$y_{cb} = X/2 = 2.14$ in

$y_{cg} = H/2 = 48/2 = 24.0$ in

$I = \pi D^4/64 = \pi(24\ \text{in})^4/64 = 16286\ \text{in}^4$

$V_d = AX = (\pi D^2/4)(X) = [\pi(24\ \text{in})^2/4](4.28\ \text{in})$

$= 1936\ \text{in}^3$

$\text{MB} = I/V_d = 8.41$ in

$y_{mc} = y_{cb} + \text{MB} = 2.14 + 8.41 = \mathbf{10.55\ in} < y_{cg}$**—unstable**

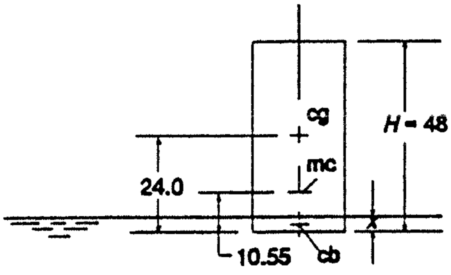

5.46 $X = 8.00$ ft; $y_{cb} = X/2 = 4.00$ ft; $y_{cg} = 12.00$ ft

$y_{mc} = y_{cb} + \text{MB}$

Scow is stable if $y_{mc} > y_{cg}$

$\text{MB}_{min} = y_{mc} - y_{cb} = y_{cg} - y_{cb} = 12.0 - 4.0 = 8.0$ ft

$$\text{MB}_{min} = \frac{I_Y}{V_d} = \frac{LW^3/12}{LWX} = \frac{W^2}{12X}$$

$$W_{min} = \sqrt{12(X)(\text{MB}_{min})} = \sqrt{12(8)(8)\text{ft}^2} = \mathbf{27.71\ ft}$$

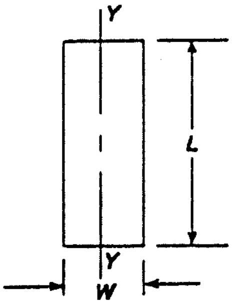

5.47 $X = 16.0$ ft; $y_{cb} = X/2 = 8.00$ ft; $y_{cg} = 13.50$ ft

$\text{MB}_{min} = y_{mc} - y_{cb} = y_{cg} - y_{cb} = 13.50\text{ ft} - 8.00\text{ ft} = 5.50$ ft

$$W_{min} = \sqrt{12(X)(\text{MB}_{min})} = \sqrt{12(16.0)(5.50)\text{ft}^2} = \mathbf{32.50\ ft}$$

5.48 $y_{cg} = 0.70$ m from bottom

For hemisphere— submerged— $\bar{y} = \dfrac{3D}{16}$ from dia.

$$y_{cb} = R - \bar{y} = \frac{D}{2} - \frac{3D}{16} = \frac{5D}{16} = \frac{5(1.50\text{ m})}{16}$$

$= 0.469$ m

$I = \pi D^4/64 = \pi(1.50\text{ m})^4/64 = 0.2485\text{ m}^4$

$V_d = \pi D^3/12 = \pi(1.50\text{ m})^3/12 = 0.8836\text{ m}^3$

$\text{MB} = I/V_d = 0.281$ m

$y_{mc} = y_{cb} + \text{MB} = 0.469 + 0.281 = \mathbf{0.750\ m} > y_{cg}$**—stable**

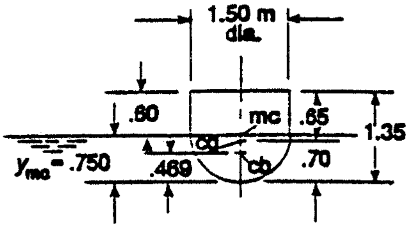

5.49 From Prob. 5.28: $X = 0.965$ mm; $D = 82$ mm;
$H = 150$ mm

$$\text{MB} = \frac{I}{V_d} = \frac{\pi D^4/64}{(\pi D^2/4)(X)} = \frac{D^2}{16X} = \frac{82^2}{16(0.965)}$$

$= 435$ mm

$y_{mc} = y_{cb} + \text{MB} = X/2 + \text{MB} = .965/2 + 435 = 436$ mm

mc is well above cup; cg is within cup

∴ **It is stable**

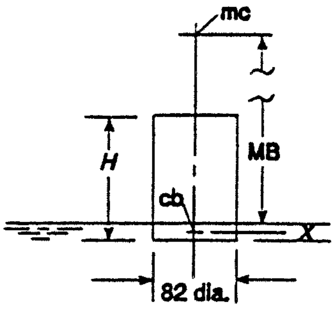

5.50 From Prob. 5.29, $X = 135$ mm

$y_{cb} = X/2 = 67.5$ mm

$$\text{MB} = \frac{I}{V_d} = \frac{\pi D^4/64}{(\pi D^2/4)(X)} = \frac{D^2}{16X} = \frac{82^2}{16(135)} = 3.11\text{ mm}$$

$y_{mc} = y_{cb} + \text{MB} = 67.5 + 3.11 = 70.61$ mm

Because wt. of bar is >> wt. of cup,

$y_{cg} \approx L\ \text{Bar}/2 = 80/2 = 40$ mm

$y_{mc} > y_{cg}$**—stable**

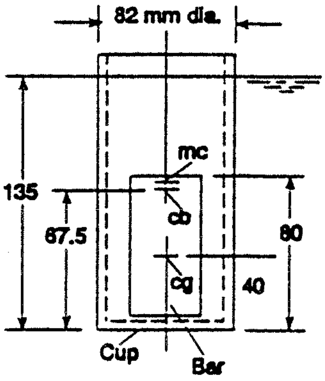

5.51 From Prob. 5.30, $X = 118$ mm

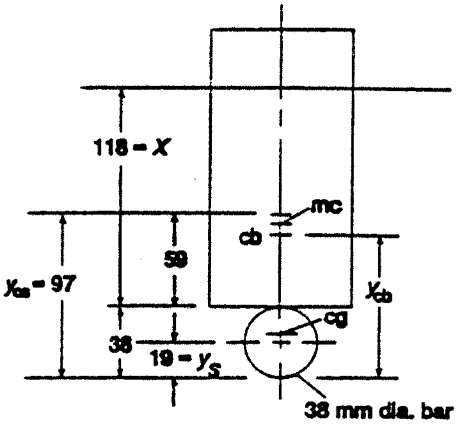

V_S = Vol. of steel bar = 9.073×10^4 mm^3

V_{CS} = Sub. vol. of cup = $\dfrac{\pi D_C^2}{4} \times X$

$V_{CS} = \dfrac{\pi(82)^2}{4}(118) = 6.232 \times 10^5$ mm^3

$V_d = V_S + V_{CS} = 7.139 \times 10^5$ mm^3

y_S = cb of steel bar = $\dfrac{D_S}{2} = 19$ mm

y_{CS} = cb of sub. vol. of cup

$y_{CS} = D_S + \dfrac{X}{2} = 38 + \dfrac{118}{2} = 97$ mm

$$y_{cb} = \frac{y_S V_S + y_{CS} V_{CS}}{V_d}$$

$$= \frac{(19)(9.073\times10^4) + (97)(6.232\times10^5)}{7.139\times10^5} = 87.1 \text{ mm}$$

$$\text{MB} = \frac{I}{V_d} = \frac{\pi(82)^4/64}{7.139\times10^5} \text{ mm} = 3.11 \text{ mm}$$

$y_{mc} = y_{cb} + \text{MB} = 90.2$ mm

y_{cg} is very low because wt. of bar is >> wt. of cup—**stable**

5.52 From Prob. 5.22, Fig. 5.23: $X = 600$ mm

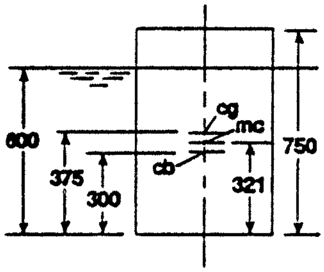

$y_{cb} = X/2 = 300$ mm

$y_{cg} = H/2 = 750/2 = 375$ mm

$$\text{MB} = \frac{I}{V_d} = \frac{\pi D^4/64}{(\pi D^2/4)(X)} = \frac{D^2}{16X} = \frac{(450)^2}{16(600)} = 21.1 \text{ mm}$$

$y_{mc} = y_{cb} + \text{MB} = 300 + 21.1$

$= \mathbf{321.1}$ **mm** $< y_{cg}$—**unstable**

5.53 From Prob. 5.26, Fig. 5.25; $t = 88.4$ mm

$X = 700 + t = 788.4$ mm

$y_{cb} = X/2 = 394.2$ mm

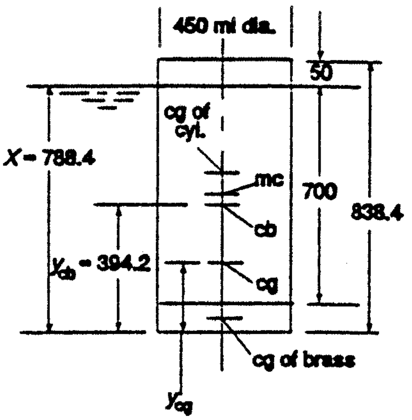

$$\text{MB} = \frac{I}{V_d} = \frac{\pi D^4/64}{\left[\pi D^2/4\right](X)} = \frac{D^2}{16X}$$

$$\text{MB} = \frac{450^2}{16(788.4)} = 16.1 \text{ mm}$$

$y_{mc} = y_{cb} + \text{MB} = 394.2 + 16.1 =$ **410.3 mm**

$y_{cg}w_{tot} = y_c w_c + y_B w_B$ composite cyl.

$w_c = \gamma_c V_c = 0.7753$ kN

$y_c = 750/2 + t = 375 + 88.4 = 463.4$ mm

$$w_B = \gamma_B V_B = \frac{840.0 \text{ kN}}{\text{m}^3} \times \frac{\pi(.45 \text{ m})^2}{4} (0.0884 \text{ m})$$

$= 1.181$ kN

$y_B = t/2 = 44.2$ mm

$$y_{cg} = \frac{y_c w_c + y_B w_B}{w_{tot}} = \frac{(463.4)(0.7753) + (44.2)(1.181)}{(0.7753 + 1.181)} = \mathbf{210.3 \text{ mm}} < y_{mc} \text{—}\mathbf{stable}$$

5.54 $w = F_b = \gamma_{SW} AX$

$$X = \frac{w}{\gamma_{SW} A} = \frac{3840 \text{ lb}}{(64.0 \text{ lb/ft}^3)(2 \text{ ft})(4 \text{ ft})} = 7.50 \text{ ft}$$

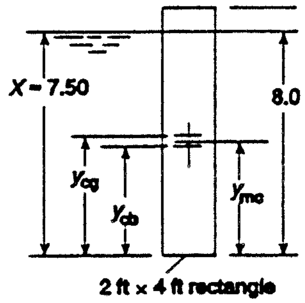

$y_{cb} = X/2 = 3.75$ ft

$I = 4(2)^3/12 = 2.667$ ft^4

$V_d = AX = (2)(4)(7.5) = 60$ ft^3

MB $= I/V_d = 2.667/60 = 0.0444$ ft

$y_{mc} = y_{cb} + \text{MB} = 3.75 + 0.0444 =$ **3.794 ft**

$y_{cg} = H/2 = 8.00/2 = 4.00$ ft $> y_{mc}$—**unstable**

5.55 $w = F_b = \gamma_{SW} AX$

$$X = \frac{w}{\gamma_{SW} A} = \frac{130 \text{ lb}(12 \text{ in/ft})}{(64.0 \text{ lb/ft}^3)(3 \text{ ft})(4 \text{ ft})}$$

$= 2.03$ in

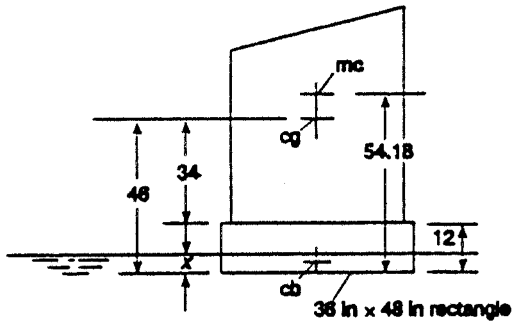

$y_{cb} = X/2 = 1.016$ in

$y_{cg} = 12$ in $+ 34$ in $= 46.0$ in

$I = (48)(36)^3$in$^4/12 = 1.866 \times 10^5$ in^4

$V_d = (48)(36)(2.03)$in$^3 = 3510$ in^3

MB $= I/V_d = 53.17$ in

$y_{mc} = y_{cb} + \text{MB} = 1.016 + 53.17$

$=$ **54.18 in** $> y_{cg}$—**stable**

5.56 $w - F_b = 0 = \gamma_W V_{tot} - \gamma_o V_d = \gamma_W AH - \gamma_o AX$

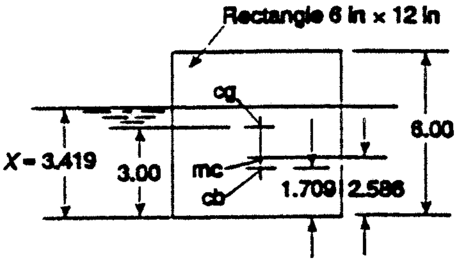

$$X = \frac{\gamma_W AH}{\gamma_o A} = \frac{\gamma_W H}{\gamma_o} = \frac{(32\ \text{lb/ft}^3)(6\ \text{in})}{0.90(62.4\ \text{lb/ft}^3)}$$

$= 3.419$ in

$y_{cb} = X/2 = 1.709$ in

$y_{cg} = H/2 = 6.00/2 = 3.00$ in

$I = 12(6)^3/12 = 216\ \text{in}^4$

$V_d = (12)(6)(3.419) = 246.2\ \text{in}^3$

$\text{MB} = I/V_d = 0.877$ in

$y_{mc} = y_{cb} + \text{MB} = 1.709 + 0.877 =$ **2.586 in < y_{cg}—unstable**

5.57 $w - F_b = \gamma_w V_d = \gamma_w AX$

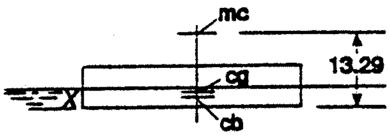

$$X = \frac{w}{\gamma_W A} = \frac{210000\ \text{lb}}{(62.4\ \text{lb/ft}^3)(60\ \text{ft})(20\ \text{ft})} = 2.804\ \text{ft}$$

$y_{cb} = X/2 = 1.402$ ft; $y_{cg} = 1.50$ ft given

$$\text{MB} = \frac{I}{V_d} = \frac{(60)(20)^3/12}{(60)(20)(2.804)} = 11.888\ \text{ft}$$

$y_{mc} = y_{cb} + \text{MB} = 1.402 + 11.888$ ft = **13.290 ft > y_{cg}—stable**

5.58 $w_{total} = 210000 + 240000 = 450000$ lb

$$X = \frac{w}{\gamma_w A} = \frac{450000\ \text{lb}}{(62.4)(60)(20)} = 6.010\ \text{ft}$$ (See Prob. 5.57)

$y_{cb} = X/2 = 3.005$ ft

$$\text{MB} = \frac{I}{V_d} = \frac{(60)(20)^3/12}{(60)(20)(6.010)} = 5.547\ \text{ft}$$

$y_{mc} = y_{cb} + \text{MB} = 3.005 + 5.547 =$ **8.552 ft**—above barge

cg is within barge—stable

More complete solution:

$$\text{Depth of coal} = d_c = \frac{w_c}{\gamma_c A} = \frac{240000\ \text{lb}}{(45\ \text{lb/ft}^3)(60\ \text{ft})(20\ \text{ft})} = 4.444\ \text{ft}$$

$y_c = d_c/2 = 2.222$ ft from bottom to cg of coal

$$y_{cg_{tot}} = \frac{w_c y_c + w_B y_B}{w_{tot}} = \frac{(240000)(2.222) + (210000)(1.50)}{450000} = 1.885\ \text{ft} < y_{mc}\text{—stable}$$

5.59 $w = F_b = \gamma_T V_d = \gamma_T A_d L$

$w = \gamma_c A_{tot} L$

$= \frac{1}{2}(.600)(.300)(1.20)(2.36)\text{kN}$

$= 0.255 \text{ kN}$

$A_d = GX + 2\left(\frac{1}{2}\right)(X)(X)$

$= (B - 2X)(X) + X^2$

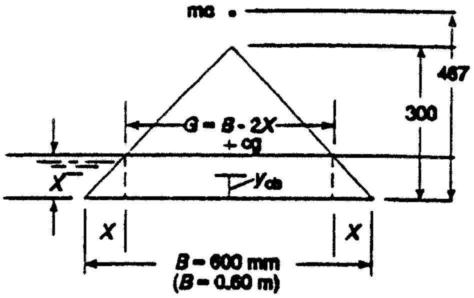

Equate
$$\begin{cases} A_d = BX - 2X^2 + X^2 = BX - X^2 = 600X - X^2 \\ A_d = \dfrac{w}{\gamma_T L} = \dfrac{0.255 \text{ kN}}{(0.87)(9.81 \text{ kN/m}^3)(1.20 \text{ m})} \\ A_d = 0.02489 \text{ m}^2 \times \dfrac{(10^3 \text{mm})^2}{\text{m}^2} = 2.489 \times 10^4 \text{mm}^2 \end{cases}$$

$600X - X^2 = 2.489 \times 10^4$

$X^2 - 600X + 2.489 \times 10^4 = 0$; $X = 44.8$ mm by Quadratic Eq.

$G = B - 2X = 600 - 2(44.8) = 510$ mm

$I = G^3L/12 = (510)^3(1200)/12 = 1.329 \times 10^{10}$ mm^4

$V_d = A_dL = [600(44.8) - 44.8^2](1200) = 2.985 \times 10^7$ mm^3

MB $= I/V_d = 445$ mm

$y_{cb} = X - \dfrac{X(G+2B)}{3(G+B)} = 44.8 - \dfrac{44.8(510+1200)}{3(510+600)} = 21.8$ mm

$y_{mc} = y_{cb} + \text{MB} = 21.8 + 445 =$ **467 mm**

$y_{cg} = \frac{1}{3}(300) = 100 \text{ mm} < y_{mc}$—**stable**

5.60 a) Cube is stable if $y_{mc} > y_{cg} = S/2$

$y_{mc} = y_{cb} + \text{MB} = \dfrac{X}{2} + \dfrac{I}{V_d} = \dfrac{X}{2} + \dfrac{S^4}{12(S^2)(X)}$

$\dfrac{X}{2} + \dfrac{S^2}{12X} = \dfrac{S}{2}$ or $X^2 + \dfrac{S^2}{6} - SX = 0$

$X^2 - SX + S^2/6 = 0$

$X = \dfrac{S \pm \sqrt{S^2 - 4S^2/6}}{2} = \dfrac{S}{2} \pm \dfrac{S}{2}\sqrt{1 - 2/3}$

$= S\left[\dfrac{1}{2} \pm \dfrac{1}{2}(0.5774)\right] = 0.788S$ **or** $0.211S$

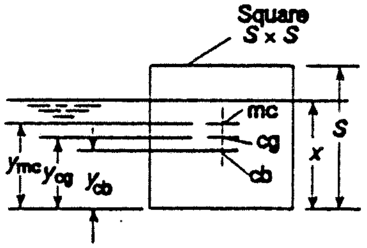

$X > 0.788S$ or $X < 0.211S$ will result in stable cube.

b) For $S = 75$ mm

$X > 0.788S =$ **59.2 mm**, $X < 0.211S =$ **15.8 mm**

5.61 Entire hull:

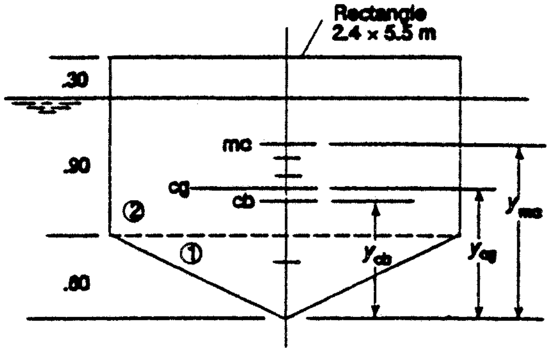

$$y_{cg} = \frac{A_1 y_1 + A_2 y_2}{A_T}$$

$$= \frac{(.72)(.40) + (2.88)(1.2)}{3.60}$$

$y_{cg} = 1.040$ m

Submerged Volume:

$$y_{cb} = \frac{(.72)(0.4) + (2.16)(1.05)}{2.88}$$

$= 0.8875$ m

$V_d = (2.88)(5.5) = 15.84 \text{ m}^3$

$I = 5.5(2.4)^3/12 = 6.336 \text{ m}^4$

$y_{mc} = y_{cb} + I/V_d = 0.8875 + 0.40 =$ **1.2875 m** $> y_{cg}$**—stable**

5.62 a) $w_C = F_b;\ \gamma_C V_C = \gamma_w V_d$

$$w_C = \frac{30 \text{ lb}}{\text{ft}^3} \times \frac{\pi(.5 \text{ ft})^2(1.0 \text{ ft})}{12} = 1.963 \text{ lb}$$

$$V_d = \frac{w_C}{\gamma_w} = \frac{1.963 \text{ lb}}{62.4 \text{ lb/ft}^3} = 0.03147 \text{ ft}^3$$

$$V_d = \frac{(0.03147 \text{ ft}^3)(1728 \text{ in}^3)}{\text{ft}^3} = 54.37 \text{ in}^3$$

$$V_d = \frac{\pi (D_X)^2 (X)}{12} = \frac{\pi (X/2)^2 X}{12} = \frac{\pi X^3}{48}$$

$$X = \sqrt[3]{\frac{48 V_d}{\pi}} = \sqrt[3]{\frac{48(54.37)}{\pi}} = 9.40 \text{ in}$$

$$y_{cb} = \frac{3X}{4} = 0.75(9.40) = 7.05 \text{ in}$$

$$I = \frac{\pi D_X^4}{64} = \frac{\pi (9.40/2)^4}{64} = 23.95 \text{ in}^4$$

MB $= I/V_d = 23.95/54.37 = 0.441$ in

$y_{mc} = y_{cb} + \text{MB} = 7.05 + 0.441 =$ **7.491 in**

$$y_{cg} = \frac{3H}{4} = 0.75(12) = \mathbf{9.00 \text{ in}}$$

$y_{mc} < y_{cg}$**—unstable**

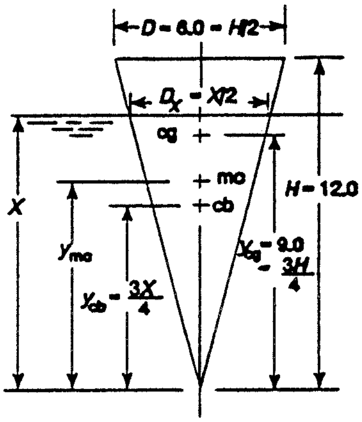

Figure for part (a) only.

b) $\gamma_C = 55.0 \text{ lb/ft}^3$

$w_C = 1.963(55/30) = 3.600$ lb

$$V_d = \frac{w_C}{\gamma_w} = \frac{3.600 \text{ lb}}{62.4 \text{ lb/ft}^3} = \frac{0.0577 \text{ ft}^3(1778 \text{ in}^3)}{\text{ft}^3} = 99.69 \text{ in}^3$$

$$X = \sqrt[3]{\frac{48 V_d}{\pi}} = \sqrt[3]{\frac{48(99.69)}{\pi}} = 11.51 \text{ in}$$

$$I = \frac{\pi D_X^4}{64} = \frac{\pi(11.51/2)^4}{64} = 53.77 \text{ in}^4$$

$$\text{MB} = \frac{I}{V_d} = \frac{53.77}{99.69} = 0.539 \text{ in}$$

$y_{cb} = 0.75X = 0.75(11.51) = 8.633$ in

$y_{mc} = y_{cb} + \text{MB} = 8.633 + 0.539 =$ **9.172 in**

$\boldsymbol{y_{cg}}$ **= 9.00 in** $< y_{mc}$**—stable**

5.63 (a) $\sum F_v = 0 = F_b - W_c - W_v$

W_c = Weight of contents; W_v = Weight of vessel; Find $W_c + W_v$

$W_c + W_v = F_b$; But $F_b = \gamma_f V_d$

$V_d = V_{hs} + V_{cyl\text{-}d}$; Where V_{hs} = Vol. of hemisphere; $V_{cyl\text{-}d}$ = Vol. of cyl. below surface

$V_{hs} = \pi D^3/12 = \pi(1.50 \text{ m})^3/12 = 0.8836 \text{ m}^3$

$V_{cyl\text{-}d} = \pi D^2 h_d/4 = \pi(1.50 \text{ m})^2(0.35 \text{ m})/4 = 0.6185 \text{ m}^3$

Then $V_d = V_{hs} + V_{cyl\text{-}d} = 0.8836 + 0.6185 = 1.502 \text{ m}^3$

$F_b = \gamma_f V_d = (1.16)(9.81 \text{ kN/m}^3)(1.502 \text{ m}^3) =$ **17.09 kN =** $\boldsymbol{W_c}$ + W_v (Answer)

(b) Find γ_v = Specific weight of vessel material = W_v/V_{vT}; Given $W_c = 5.0$ kN

From part (a), 17.09 kN = $W_c + W_v$; Then $W_v = 17.09 - W_v = 17.09 - 5.0 = 12.09$ kN

V_{vT} = Total volume of vessel = $V_{hs} + V_{cyl\text{-}T}$

$V_{cyl\text{-}T} = \left(D_o^2 - D_i^2\right)(0.60 \text{ m})/4 = \pi[(1.50 \text{ m})^2 - (1.40 \text{ m})^2](0.60 \text{ m})/4 = 0.1367 \text{ m}^3$

$V_{vT} = V_{hs} + V_{cyl\text{-}} = 0.8836 \text{ m}^3 + 0.1367 \text{ m}^3 = 1.020 \text{ m}^3$

γ_v = Specific weight of vessel material = W_v/V_{vT}; = (12.09 kN)/(1.020 m^3)

= **11.85 kN/m^3** = γ_v

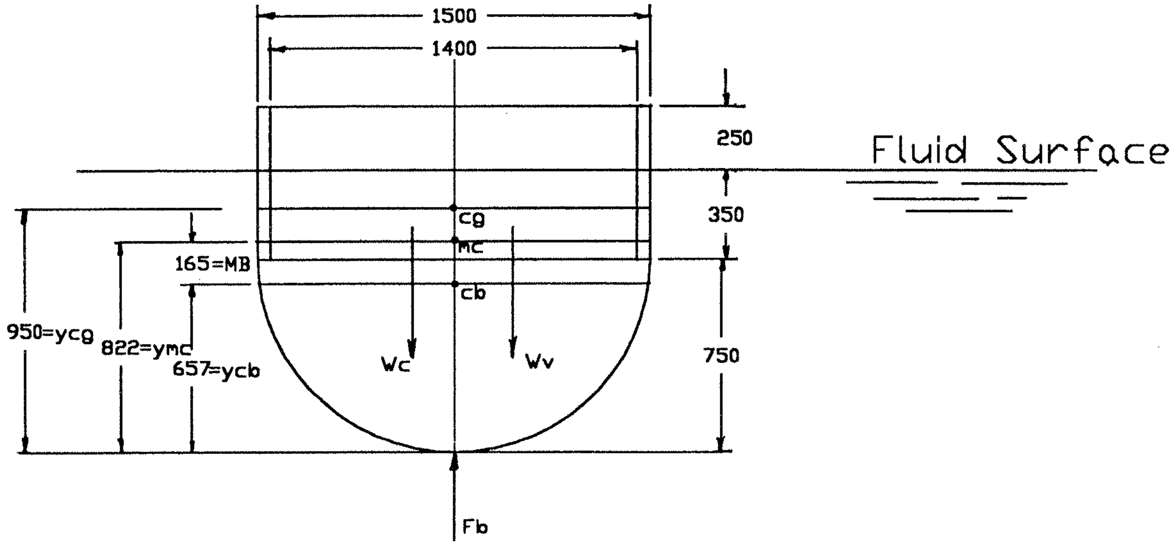

(c) Evaluate stability. Find metacenter, y_{mc}. See figure for key dimensions.
Given: $y_{cg} = 0.75 + 0.60 - 0.40 = 0.950$ m from bottom of vessel.
We must find: $y_{mc} = y_{cb} + MB = y_{cb} + I/V_d$

$I = \pi D^4/64 = \pi(1.50\text{ m})^4/64 = 0.2485\text{ m}^4$ For circular cross section at fluid surface.

$V_d = 1.502\text{ m}^3$ From part (a).

$MB = (0.2548\text{ m}^4)/(1.502\text{ m}^3) = 0.1654$ m

The center of buoyancy is at the centroid of the displaced volume. The displaced volume is a composite of a cylinder and a hemisphere. The position of its centroid must be computed from the principle of composite volumes. *Measure all y values from bottom of vessel.*

$$(y_{cb})(V_d) = (y_{hs})(V_{hs}) + (y_{cyl\text{-}d})(V_{cyl\text{-}d})$$
$$y_{cb} = [(y_{hs})(V_{hs}) + (y_{cyl\text{-}d})(V_{cyl\text{-}d})]/V_d$$

We know from part (a): $V_d = 1.502\text{ m}^3$; $V_{hs} = 0.8836\text{ m}^3$; $V_{cyl\text{-}d} = 0.6185\text{ m}^3$

$y_{hs} = D/2 - y = D/2 - 3D/16 = (1.50\text{ m})/2 - 3(1.50\text{ m})/16 = 0.4688$ m

$y_{cyl\text{-}d} = D/2 + (0.35\text{ m})/2 = (1.50\text{ m})/2 + 0.175\text{ m} = 0.925$ m

Then $y_{cb} = [(0.4688\text{ m})(0.8836\text{ m}^3) + (0.925\text{ m})(0.6185\text{ m}^3)]/(1.502\text{ m}^3) = 0.657$ m

Now, $y_{mc} = y_{cb} + MB = 0.657\text{ m} + 0.1654\text{ m} = 0.822$ m From bottom of vessel.

Because $y_{mc} < y_{cg}$, vessel is unstable.

5.64 Let F_s be the supporting force acting vertically upward when the club head is suspended in the water.

$\sum F_v = 0 = F_s + F_b - W$; Then $F_s = W - F_b$

$F_b = \gamma_w V_{al}$; $W = \gamma_{al} V_{al}$;

Where V_{al} = Volume of aluminum club head

$V_{al} = W/\gamma_{al} = (0.500\text{ lb})/(0.100\text{ lb/in}^3) = 5.00\text{ in}^3$

$F_s = W - F_b = 5.00\text{ lb} - (62.4\text{ lb/ft}^3)(5.00\text{ in}^3)(1\text{ ft}^3)/(1728\text{ in}^3)$

$F_s = 0.319$ lb

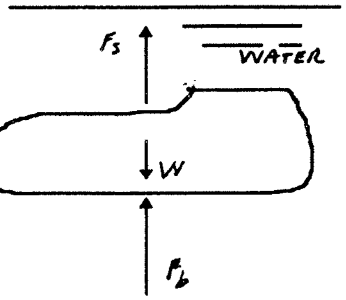

CHAPTER SIX

FLOW OF FLUIDS

Conversion factors

6.1 $Q = 3.0 \text{ gal/min} \times 6.309 \times 10^{-5} \text{ m}^3\text{/s}/1.0 \text{ gal/min} = \mathbf{1.89 \times 10^{-4} \text{ m}^3\text{/s}}$

6.2 $Q = 459 \text{ gal/min} \times 6.309 \times 10^{-5} \text{ m}^3\text{/s}/1.0 \text{ gal/min} = \mathbf{2.90 \times 10^{-2} \text{ m}^3\text{/s}}$

6.3 $Q = 8720 \text{ gal/min} \times 6.309 \times 10^{-5} \text{ m}^3\text{/s}/1.0 \text{ gal/min} = \mathbf{0.550 \text{ m}^3\text{/s}}$

6.4 $Q = 84.3 \text{ gal/min} \times 6.309 \times 10^{-5} \text{ m}^3\text{/s}/1.0 \text{ gal/min} = \mathbf{5.32 \times 10^{-3} \text{ m}^3\text{/s}}$

6.5 $Q = 125 \text{ L/min} \times 1.0 \text{ m}^3\text{/s}/60000 \text{ L/min} = \mathbf{2.08 \times 10^{-3} \text{ m}^3\text{/s}}$

6.6 $Q = 4500 \text{ L/min} \times 1.0 \text{ m}^3\text{/s}/60000 \text{ L/min} = \mathbf{7.50 \times 10^{-2} \text{ m}^3\text{/s}}$

6.7 $Q = 15000 \text{ L/min} \times 1.0 \text{ m}^3\text{/s}/60000 \text{ L/min} = \mathbf{0.250 \text{ m}^3\text{/s}}$

6.8 $Q = 459 \text{ gal/min} \times 3.785 \text{ L/min}/1.0 \text{ gal/min} = \mathbf{1737 \text{ L/min}}$

6.9 $Q = 8720 \text{ gal/min} \times 3.785 \text{ L/min}/1.0 \text{ gal/min} = \mathbf{3.30 \times 10^{4} \text{ L/min}}$

6.10 $Q = 23.5 \text{ cm}^3\text{/s} \times \text{m}^3/(100 \text{ cm})^3 = \mathbf{2.35 \times 10^{-5} \text{ m}^3\text{/s}}$

6.11 $Q = 0.296 \text{ cm}^3\text{/s} \times 1 \text{ m}^3/(100 \text{ cm})^3 = \mathbf{2.96 \times 10^{-7} \text{ m}^3\text{/s}}$

6.12 $Q = 0.105 \text{ m}^3\text{/s} \times 60000 \text{ L/min}/1.0 \text{ m}^3\text{/s} = \mathbf{6300 \text{ L/min}}$

6.13 $Q = 3.58 \times 10^{-3} \text{ m}^3\text{/s} \times 60000 \text{ L/min}/1.0 \text{ m}^3\text{/s} = \mathbf{215 \text{ L/min}}$

6.14 $Q = 5.26 \times 10^{-6} \text{ m}^3\text{/s} \times 60000 \text{ L/min}/1.0 \text{ m}^3\text{/s} = \mathbf{0.316 \text{ L/min}}$

6.15 $Q = 459 \text{ gal/min} \times 1.0 \text{ ft}^3\text{/s}/449 \text{ gal/min} = \mathbf{1.02 \text{ ft}^3\text{/s}}$

6.16 $Q = 20 \text{ gal/min} \times 1.0 \text{ ft}^3\text{/s}/449 \text{ gal/min} = \mathbf{4.45 \times 10^{-2} \text{ ft}^3\text{/s}}$

6.17 $Q = 2500 \text{ gal/min} \times 1.0 \text{ ft}^3\text{/s}/449 \text{ gal/min} = \mathbf{5.57 \text{ ft}^3\text{/s}}$

6.18 $Q = 2.50 \text{ gal/min} \times 1.0 \text{ ft}^2\text{/s}/449 \text{ gal/min} = \mathbf{5.57 \times 10^{-3} \text{ ft}^3\text{/s}}$

6.19 $Q = 1.25 \text{ ft}^3\text{/s} \times 449 \text{ gal/min}/1.0 \text{ ft}^3\text{/s} = \mathbf{561 \text{ gal/min}}$

6.20 $Q = 0.06 \text{ ft}^3\text{/s} \times 449 \text{ gal/min}/1.0 \text{ ft}^3\text{/s} = \mathbf{26.9 \text{ gal/min}}$

6.21 $Q = 7.50 \text{ ft}^3\text{/s} \times 449 \text{ gal/min}/1.0 \text{ ft}^3\text{/s} = \mathbf{3368 \text{ gal/min}}$

6.22 $Q = 0.008 \text{ ft}^3/\text{s} \times 449 \text{ gal/min}/1.0 \text{ ft}^3/\text{s} = \mathbf{3.59 \text{ gal/min}}$

6.23 $Q = 500 \text{ gal/min} \times 1.0 \text{ ft}^3/\text{s}/449 \text{ gal/min} = \mathbf{1.11 \text{ ft}^3/\text{s}}$
$Q = 2500/449 = \mathbf{5.57 \text{ ft}^3/\text{s}}$
$Q = 500 \text{ gal/min} \times 6.309 \times 10^{-5} \text{ m}^3/\text{s}/1.0 \text{ gal/min} = \mathbf{3.15 \times 10^{-2} \text{ m}^3/\text{s}}$
$Q = 2500(6.309 \times 10^{-5}) = \mathbf{0.158 \text{ m}^3/\text{s}}$

6.24 $Q = 3.0 \text{ gal/min} \times 1.0 \text{ ft}^3/\text{s}/449 \text{ gal/min} = \mathbf{6.68 \times 10^{-3} \text{ ft}^3/\text{s}}$
$Q = 30.0/449 = \mathbf{6.68 \times 10^{-2} \text{ ft}^3/\text{s}}$
$Q = 3.0 \text{ gal/min} \times 6.309 \times 10^{-5} \text{ m}^3/\text{s}/1.0 \text{ gal/min} = \mathbf{1.89 \times 10^{-4} \text{ m}^3/\text{s}}$
$Q = 30(6.309 \times 10^{-5}) = \mathbf{1.89 \times 10^{-3} \text{ m}^3/\text{s}}$

6.25 $$Q = \frac{745 \text{ gal}}{\text{h}} \times \frac{1 \text{ h}}{60 \text{ min}} \times \frac{1.0 \text{ ft}^3/\text{s}}{449 \text{ gal/min}} = \mathbf{2.77 \times 10^{-2} \text{ ft}^3/\text{s}}$$

6.26 $$Q = \frac{0.85 \text{ gal}}{\text{h}} \times \frac{1 \text{ h}}{60 \text{ min}} \times \frac{1.0 \text{ ft}^3/\text{s}}{449 \text{ gal/min}} = \mathbf{3.16 \times 10^{-5} \text{ ft}^3/\text{s}}$$

6.27 $$Q = \frac{11.4 \text{ gal}}{24 \text{ h}} \times \frac{1 \text{ h}}{60 \text{ min}} \times \frac{1.0 \text{ ft}^3/\text{s}}{449 \text{ gal/min}} = \mathbf{1.76 \times 10^{-5} \text{ ft}^3/\text{s}}$$

6.28 $$Q = \frac{19.5 \text{ mL}}{\text{min}} \times \frac{1.0 \text{ L}}{10^3 \text{ mL}} \times \frac{1.0 \text{ m}^3/\text{s}}{60000 \text{ L/min}} = \mathbf{3.25 \times 10^{-7} \text{ m}^3/\text{s}}$$

Fluid flow rates

6.29 $W = \gamma Q = (9.81 \text{ kN/m}^3)(0.075 \text{ m}^3/\text{s}) = 0.736 \text{ kN/s}(10^3 \text{ N/kN}) = \mathbf{736 \text{ N/s}}$
$M = \rho Q = (1000 \text{ kg/m}^3)(0.075 \text{ m}^3/\text{s}) = \mathbf{75.0 \text{ kg/s}}$

6.30 $W = \gamma Q = (0.90)(9.81 \text{ kN/m}^3)(2.35 \times 10^{-3} \text{ m}^3/\text{s}) = 2.07 \times 10^{-2} \text{ kN/s} = \mathbf{20.7 \text{ N/s}}$
$M = \rho Q = (0.90)(1000 \text{ kg/m}^3)(2.35 \times 10^{-3} \text{ m}^3/\text{s}) = \mathbf{2.115 \text{ kg/s}}$

6.31 $$Q = \frac{W}{\gamma} = \frac{28.5 \text{ N}}{\text{h}} \times \frac{\text{m}^3}{1.08(9.81 \text{ kN})} \times \frac{1.0 \text{ kN}}{10^3 \text{ N}} \times \frac{1.0 \text{ h}}{3600 \text{ s}} = \mathbf{7.47 \times 10^{-7} \text{ m}^3/\text{s}}$$
$M = \rho Q = (1.08)(1000 \text{ kg/m}^3)(7.47 \times 10^{-7} \text{ m}^3/\text{s}) = \mathbf{8.07 \times 10^{-4} \text{ kg/s}}$

6.32 $$Q = \frac{W}{\gamma} = \frac{28.5 \text{ N}}{\text{h}} \times \frac{\text{m}^3}{12.50 \text{ N}} \times \frac{1 \text{ h}}{3600 \text{ s}} = \mathbf{6.33 \times 10^{-4} \text{ m}^3/\text{s}}$$

6.33 $$M = \rho Q = \frac{1.20 \text{ kg}}{\text{m}^3} \times \frac{640 \text{ ft}^3}{\text{min}} \times \frac{1.0 \text{ slug}}{14.59 \text{ kg}} \times \frac{1 \text{ min}}{60 \text{ s}} \times \frac{0.0283 \text{ m}^3}{\text{ft}^3}$$
$= \mathbf{2.48 \times 10^{-2} \text{ slug/s}}$
$M = \rho Q = \gamma Q/g = W/g$
$$W = gM = \frac{32.2 \text{ ft}}{\text{s}^2} \times \frac{2.48 \times 10^{-2} \text{ slug}}{\text{s}} \times \frac{1 \text{ lb} \cdot \text{s}^2/\text{ft}}{\text{slug}} \times \frac{3600 \text{ s}}{\text{hr}} = \mathbf{2878 \text{ lb/hr}}$$

6.34 $W = \gamma Q = (0.075\ \text{lb/ft}^3)(45700\ \text{ft}^3/\text{min}) = \mathbf{3428\ lb/min}$

$$M = \rho Q = \frac{\gamma Q}{g} = \frac{W}{g} = \frac{3428\ \text{lb/min}}{32.2\ \text{ft/s}^2} = \frac{106\ \text{lb}\cdot\text{s}^2/\text{ft}}{\text{min}} = \mathbf{106\ slugs/min}$$

6.35 $$Q = \frac{W}{\gamma} = \frac{1200\ \text{lb}}{\text{hr}} \times \frac{\text{ft}^3}{0.062\ \text{lb}} \times \frac{1\ \text{hr}}{3600\ \text{s}} = \mathbf{5.38\ ft^3/s}$$

6.36 $$W = \gamma Q = \frac{62.4\ \text{lb}}{\text{ft}^3} \times \frac{1.65\ \text{gal}}{\text{min}} \times \frac{1.0\ \text{ft}^3}{7.48\ \text{gal}} = 13.76\ \text{lb/min} = \frac{w}{t}$$

$$t = \frac{w}{W} = \frac{7425\ \text{lb min}}{13.76\ \text{lb}} \times \frac{1\ \text{hr}}{60\ \text{min}} = \mathbf{8.99\ hr}$$

Continuity equation

6.37 $$Q = Av\text{: } A = \frac{Q}{v} = \frac{75.0\ \text{ft}^3/\text{s}}{10.0\ \text{ft/s}} = 7.50\ \text{ft}^2 = \frac{\pi D^2}{4}$$

$$D = \sqrt{4A/\pi} = \sqrt{4(7.50)/\pi} = \mathbf{3.09\ ft}$$

6.38 $$A_1 v_1 = A_2 v_2;\ v_2 = v_1 \frac{A_1}{A_2} = v_1 \left(\frac{D_1}{D_2}\right)^2 = \frac{1.65\ \text{ft}}{\text{s}}\left(\frac{12}{3}\right)^2 = \mathbf{26.4\ ft/s}$$

6.39 $$Q = 2000\ \text{L/min} \times \frac{1.0\ \text{m}^3/\text{s}}{60000\ \text{L/min}} = 0.0333\ \text{m}^3/\text{s}$$

$$v_1 = \frac{Q}{A_1} = \frac{0.0333\ \text{m}^3/\text{s}}{\pi(.30\ \text{m})^2/4} = \mathbf{0.472\ m/s}$$

$$v_2 = \frac{Q}{A_2} = \frac{0.0333\ \text{m}^3/\text{s}}{\pi(.15\ \text{m})^2/4} = \mathbf{1.89\ m/s}$$

6.40 $$A_1 v_1 = A_2 v_2;\ v_2 = v_1 \frac{A_1}{A_2} = v_1 \left(\frac{D_1}{D_2}\right)^2 = 1.20\ \text{m/s}\left(\frac{150}{300}\right)^2 = \mathbf{0.300\ m/s}$$

6.41 $Q_1 = A_1 v_1 = A_2 v_2 + A_3 v_3 = Q_2 + Q_3$

$$Q_2 = A_2 v_2 = \frac{\pi(0.050\ \text{m})^2}{4} \times 12.0\ \text{m/s} = 0.0236\ \text{m}^3/\text{s}$$

$Q_3 = Q_1 - Q_2 = 0.072 - 0.0236 = 0.0484\ \text{m}^3/\text{s}$

$$v_3 = \frac{Q_3}{A_3} = \frac{0.0484\ \text{m}^3/\text{s}}{\pi(.100\ \text{m})^2/4} = \mathbf{6.17\ m/s}$$

6.42 $$A_{\min} = \frac{Q}{v} = 10\ \text{gal/min} \times \frac{1\ \text{ft}^3/\text{s}}{449\ \text{gal/min}} \times \frac{1}{1.0\ \text{ft/s}} = 0.02227\ \text{ft}^2\text{:}$$ **2-in Sch. 40 pipe**

6.43 $W = \gamma Q = \gamma A \upsilon = \dfrac{60.6\text{ lb}}{\text{ft}^3} \times 0.2006\text{ ft}^2 \times \dfrac{4.50\text{ ft}}{\text{s}} \times \dfrac{3600\text{ s}}{\text{hr}} = \mathbf{1.97 \times 10^5\ lb/h}$

6.44 $\upsilon = \dfrac{Q}{A} = 19.7\text{ L/min} \times \dfrac{1\text{ m}^3\text{/s}}{60000\text{ L/min}} \times \dfrac{1}{3.835 \times 10^{-4}\text{m}^2} = \mathbf{0.856\ m/s}$

6.45 $Q = 30\text{ gal/min} \times 1.0\text{ ft}^3\text{/s/449 gal/min} = 0.0668\text{ ft}^3\text{/s}$

$A_1 = \dfrac{Q}{\upsilon_1} = \dfrac{0.0668\text{ ft}^3\text{/s}}{8.0\text{ ft/s}} = 8.35 \times 10^{-3}\text{ ft}^2$ max.

1 1/4 × 0.065 tube → $A_1 = 6.842 \times 10^{-3}\text{ ft}^2$

Actual $\upsilon_1 = Q/A_1 = (0.0668\text{ ft}^3\text{/s})/(6.842 \times 10^{-3}\text{ ft}^2) = 9.77$ ft/s

$A_2 = \dfrac{Q}{\upsilon_2} = \dfrac{0.0668\text{ ft}^3\text{/s}}{25.0\text{ ft/s}} = 2.67 \times 10^{-3}\text{ ft}^2$ min.

7/8 × 0.065 tube → $A_2 = 3.027 \times 10^{-3}\text{ ft}^2$

Actual $\upsilon_2 = Q/A_2 = (0.0668\text{ ft}^3\text{/s})/(3.027 \times 10^{-3}\text{ ft}^2) = 22.07$ ft/s

6.46 $A_1 = \dfrac{Q}{\upsilon_1} = \dfrac{0.0668\text{ ft}^3\text{/s}}{2.0\text{ ft/s}} = 3.34 \times 10^{-2}\text{ ft}^2$ max.

2-in × 0.065 is largest tube listed → $A_1 = 1.907 \times 10^{-2}\text{ ft}^2$

Actual $\upsilon_1 = Q/A_1 = (0.0668\text{ ft}^3\text{/s})/(1.907 \times 10^{-2}\text{ ft}^2) = 3.50$ ft/s

$A_2 = \dfrac{Q}{\upsilon_2} = \dfrac{0.0668\text{ ft}^3\text{/s}}{7.0\text{ ft/s}} = 9.54 \times 10^{-3}\text{ ft}^2$ min.

1 1/2-in × 0.083 tube → $A_2 = 9.706 \times 10^{-3}\text{ ft}^2$

Actual $\upsilon_2 = Q/A_2 = (0.0668\text{ ft}^3\text{/s})/(9.706 \times 10^{-3}\text{ ft}^2) = 6.88$ ft/s

6.47 $Q_L = 1800\text{ L/min} \times \dfrac{1\text{ m}^3\text{/s}}{60000\text{ L/min}} = 0.030\text{ m}^3\text{/s}$

$A_L = \dfrac{Q_L}{\upsilon} = \dfrac{0.030\text{ m}^3\text{/s}}{2.0\text{ m/s}} = 0.015\text{ m}^2$ minimum; **6-in Sch 40**; $A = 1.864 \times 10^{-2}\text{ m}^2$

$Q_H = 9500/60000 = 0.1583\text{ m}^3\text{/s}$

$A_H = \dfrac{Q_H}{\upsilon} = \dfrac{0.1583}{2.0} = 7.916 \times 10^{-2}\text{ m}^2$; **14-in Sch 40**; $A = 8.729 \times 10^{-2}\text{ m}^2$

6.48 For $A_L = 0.015\text{ m}^2$ min; **6-in Sch 80**; $A = 1.682 \times 10^{-2}\text{ m}^2$

For $A_H = 7.916 \times 10^{-2}\text{ m}^2$ min; **14-in Sch 80**; $A = 7.916 \times 10^{-2}\text{ m}^2$

6.49 $\upsilon = \dfrac{Q}{A} = \dfrac{400\text{ L/min}}{2.168 \times 10^{-3}\text{m}^2} \times \dfrac{1\text{ m}^3\text{/s}}{60000\text{ L/min}} = \mathbf{3.075\ m/s}$ [2-in Sch 40 pipe]

6.50 2-in Sch 80: $\upsilon = \dfrac{Q}{A} = \dfrac{400}{(1.905 \times 10^{-3})(60000)} = \mathbf{3.500\ m/s}$

6.51 $\upsilon = \frac{Q}{A} = \frac{400\text{ gal/min}}{0.0884\text{ ft}^2} \times \frac{1\text{ ft}^3\text{/s}}{449\text{ gal/min}}$ = **10.08 ft/s** [4-in Sch 40]

6.52 $\upsilon = \frac{Q}{A} = \frac{400}{(0.07986)(449)}$ = **11.16 ft/s** [4-in Sch 80]

6.53 $A = \frac{Q}{\upsilon} = \frac{2.80\text{ L/min}}{0.30\text{ m/s}} \times \frac{1\text{ m}^3\text{/s}}{60000\text{ L/min}} = 1.556 \times 10^{-4}\text{ m}^2$ min.

3/4 × 0.065 steel tube, $A = 1.948 \times 10^{-4}\text{ m}^2$

6.54 $\upsilon_{6\text{-in}} = \frac{Q_6}{A_6} = \frac{95\text{ gal/min}}{0.2006\text{ ft}^2} \times \frac{1\text{ ft}^3\text{/s}}{449\text{ gal/min}}$ = **1.055 ft/s**

$\upsilon_{3\text{-in}} = \frac{Q_3}{A_3} = \frac{0.5Q_6}{A_3} = \frac{(0.5)(95)}{(0.05132)(449)}$ = **2.061 ft/s**

6.55 Q = 800 gal/min(1 ft³/s/449 gal/min) = 1.782 ft³/s

Suction pipe: 5 in Sch 40; $A_s = 0.1390\text{ ft}^2$; $v_s = Q/A = 12.82$ ft/s

6 in Sch 40; $A_s = 0.2006\text{ ft}^2$; $v_s = Q/A = 8.88$ ft/s

Discharge pipe: 3 1/2 in Sch 40; $A_d = 0.06868\text{ ft}^2$; $v_d = Q/A = 25.94$ ft/s

4 in Sch 40; $A_d = 0.08840\text{ ft}^2$; $v_d = Q/A = 20.15$ ft/s

6.56 Q = 2000 gal/min(1 ft³/s/449 gal/min) = 4.454 ft³/s

Suction pipe: 6 in Sch 40; $A_s = 0.2006\text{ ft}^2$; $v_s = Q/A = 22.21$ ft/s

8 in Sch 40; $A_s = 0.3472\text{ ft}^2$; $v_s = Q/A = 12.83$ ft/s

Discharge pipe: 5 in Sch 40; $A_d = 0.1390\text{ ft}^2$; $v_d = Q/A = 32.05$ ft/s

6 in Sch 40; $A_d = 0.2006\text{ ft}^2$; $v_d = Q/A = 22.21$ ft/s

6.57 Q = 60 m³/h(1 h/3600 s) = 0.01667 m³/s

Suction pipe: 3 in Sch 40; $A_s = 4.768 \times 10^{-3}\text{ m}^2$; $v_s = Q/A = 3.73$ m/s

3 1/2 in Sch 40; $A_s = 6.381 \times 10^{-3}\text{ m}^2$; $v_s = Q/A = 2.61$ m/s

Discharge pipe: 2 in Sch 40; $A_d = 2.168 \times 10^{-3}\text{ m}^2$; $v_d = Q/A = 7.69$ m/s

2 1/2 in Sch 40; $A_d = 3.090 \times 10^{-3}\text{ m}^2$; $v_d = Q/A = 5.39$ m/s

6.58 $Q = A\upsilon = (7.538 \times 10^{-3}\text{ m}^3)(3.0\text{ m/s}) = 2.261 \times 10^{-2}\text{ m}^3\text{/s}$

$A = \frac{Q}{\upsilon} = \frac{2.261 \times 10^{-2}\text{ m}^3\text{/s}}{15.0\text{ m/s}} = 1.508 \times 10^{-3}\text{ m}^2 = \pi D_t^2/4$

$D_t = \sqrt{4A/\pi} = \sqrt{4(1.508 \times 10^{-3}\text{m}^2)/\pi} = 4.38 \times 10^{-2}\text{ m} \times \frac{10^3\text{ mm}}{\text{m}}$ = **43.8 mm**

6.59 $\upsilon_p = \frac{Q}{A_p} = \frac{7.50\text{ ft}^3\text{/s}}{0.9396\text{ ft}^2}$ = **7.98 ft/s in pipe**

$\upsilon_n = \frac{Q}{A_n} = \frac{7.50\text{ ft}^3\text{/s}}{\frac{\pi(4.60\text{ in})^2}{4} \times \frac{1\text{ ft}^2}{144\text{ in}^2}}$ = **65.0 ft/s in nozzle**

Bernoulli's equation

6.60 $$\frac{p_1}{\gamma_G}+z_1+\frac{\upsilon_1^2}{2g}=\frac{p_2}{\gamma_G}+z_2+\frac{\upsilon_2^2}{2g};\quad z_1=z_2$$

$$\upsilon_1=\frac{Q}{A_1}=\frac{0.11\,\text{m}^3/\text{s}}{\pi(0.15\,\text{m})^2/4}=\frac{6.22\,\text{m}}{\text{s}};\quad \upsilon_2=\upsilon_1\left(\frac{D_1}{D_2}\right)^2=\frac{24.90\,\text{m}}{\text{s}}$$

$$p_2=p_1+\left[\frac{\upsilon_1^2-\upsilon_2^2}{2g}\right]\gamma_G=415\,\text{kPa}+\frac{[6.22^2-24.90^2]\,\text{m}^2/\text{s}^2}{2(9.81\,\text{m/s}^2)}\times\frac{0.67(9.81\,\text{kN})}{\text{m}^3}$$

$= \mathbf{220\ kPa}$

6.61 $$\frac{p_A}{\gamma_W}+z_A+\frac{\upsilon_A^2}{2g}=\frac{p_B}{\gamma_W}+z_B+\frac{\upsilon_B^2}{2g};\ \upsilon_A=\frac{Q}{A_A}=\frac{0.37\,\text{m}^3/\text{s}}{\pi(0.3\,\text{m})^2/4}=\frac{5.23\,\text{m}}{\text{s}};$$

$$\upsilon_B=\upsilon_A\left(\frac{D_A}{D_B}\right)^2=\frac{1.31\,\text{m}}{\text{s}}$$

$$p_B=p_A+\gamma_w\left[(z_A-z_B)+\frac{\upsilon_A^2-\upsilon_B^2}{2g}\right]$$

$$=66.2\ \text{kPa}+\frac{9.81\,\text{kN}}{\text{m}^3}\left[-4.5+\frac{(5.23^2-1.31^2)\text{m}^2/\text{s}^2}{2(9.81\,\text{m/s}^2)}\right]$$

$p_B = 66.2\text{ kPa} - 31.3\text{ kPa} =$ **34.9 kPa**

6.62 Pt. A at gage; Pt. B outside nozzle: $\frac{p_A}{\gamma} + z_A + \frac{\upsilon_A^2}{2g} = \frac{p_B}{\gamma} + z_B + \frac{\upsilon_B^2}{2g}$; $p_B = 0$

$$\frac{\upsilon_A^2 - \upsilon_B^2}{2g} = (z_B - z_A) - \frac{p_A}{\gamma} = 3.65\text{ m} - \frac{565\text{ kN}}{\text{m}^2(9.81\text{ kN/m}^3)} = -53.94\text{ m}$$

$\upsilon_B = \upsilon_A(A_A/A_B) = \upsilon_A(D_A/D_B)^2 = \upsilon_A(70/35)^2 = 4\upsilon_A$; $\upsilon_B^2 = 16\upsilon_A^2$;

$\upsilon_A^2 - \upsilon_B^2 = -15\upsilon_A^2$

$-15\upsilon_A^2 = 2g(-53.94\text{ m})$

$$\upsilon_A = \sqrt{\frac{2g(53.94\text{ m})}{15}} = \sqrt{\frac{2(9.81\text{ m/s}^2)(53.94\text{ m})}{15}} = 8.40\text{ m/s}$$

$$Q = A_A\upsilon_A = \frac{\pi(.070\text{ m})^2}{4} \times 8.40\text{ m/s} = 0.0323\text{ m}^3\text{/s} = \mathbf{3.23 \times 10^{-2}\ m^3/s}$$

6.63 Pt. A before nozzle; Pt. B outside nozzle: $\frac{p_A}{\gamma} + z_A + \frac{\upsilon_A^2}{2g} = \frac{p_B}{\gamma} + z_B + \frac{\upsilon_B^2}{2g}$; $p_B = 0$, $z_A = z_B$

$$p_A = \gamma\left[\frac{\upsilon_B^2 - \upsilon_A^2}{2g}\right] = \frac{60.6\text{ lb}}{\text{ft}^3}\left[\frac{(75^2 - 42.19^2)\text{ft}^2/\text{s}^2}{2(32.2\text{ ft/s}^2)}\right]\frac{1\text{ ft}^2}{144\text{ in}^2} = \mathbf{25.1\ psig}$$

$$\upsilon_B = 75\text{ ft/s};\ \upsilon_A = \upsilon_B\frac{A_B}{A_A} = 75\left(\frac{D_B}{D_A}\right)^2 = 75\left(\frac{.75}{1.0}\right)^2 = 42.19\text{ ft/s}$$

6.64 $Q = 10\text{ gal/min} \times \frac{1\text{ ft}^3/\text{s}}{449\text{ gal/min}} = \frac{0.0223\text{ ft}^3}{\text{s}}$; $\upsilon_A = \frac{Q}{A_A} = \frac{0.0223\text{ ft}^3/\text{s}}{0.0060\text{ ft}^2} = \frac{3.71\text{ ft}}{\text{s}}$

$\upsilon_B = \frac{Q}{A_B} = \frac{0.0223}{0.02333} = \frac{0.955\text{ ft}}{\text{s}}$; $\frac{p_A}{\gamma_K} + z_A + \frac{\upsilon_A^2}{2g} = \frac{p_B}{\gamma_K} + z_B + \frac{\upsilon_B^2}{2g}$; $z_A = z_B$

$$p_A - p_B = \gamma_K\left[\frac{\upsilon_B^2 - \upsilon_A^2}{2g}\right] = \frac{50\text{ lb}}{\text{ft}^3}\left[\frac{(0.955^2 - 3.71^2)\text{ft}}{2(32.2\text{ ft/s}^2)}\right]\frac{1\text{ ft}^2}{144\text{ in}^2} = \mathbf{-0.0694\ psi}$$

6.65 Pt. 1 at water surface; Pt. 2 outside nozzle.

$\frac{p_1}{\gamma} + z_1 + \frac{\upsilon_1^2}{2g} = \frac{p_2}{\gamma} + z_2 + \frac{\upsilon_2^2}{2g}$; $p_1 = 0, \upsilon_1 = 0, p_2 = 0$

$$\upsilon_2 = \sqrt{2g(z_1 - z_2)} = \sqrt{2(9.81\text{ m/s}^2)(6.0\text{ m})} = 10.85\text{ m/s}$$

$$Q = A_2\upsilon_2 = \frac{\pi(0.050\text{ m})^2}{4} \times 10.85\text{ m/s} = \mathbf{2.13 \times 10^{-2}\ m^3/s}$$

$$\upsilon_A = \frac{Q}{A_A} = \frac{0.0213\text{ m}^3/\text{s}}{\pi(.15\text{ m})^2/4} = 1.206\text{ m/s};\ \frac{\upsilon_A^2}{2g} = \frac{1.1206^2\text{ m}^2/\text{s}^2}{2(9.81\text{ m/s}^2)} = 0.0741\text{ m}$$

$\frac{p_1}{\gamma} + z_1 + \frac{\upsilon_1^2}{2g} = \frac{p_A}{\gamma} + z_A + \frac{\upsilon_A^2}{2g}$; $p_1 = 0, \upsilon_1 = 0$

$$p_A = \gamma_w\left[(z_1 - z_A) - \frac{\upsilon_A^2}{2g}\right] = \frac{9.81\text{ kN}}{\text{m}^3}[6.0\text{ m} - 0.0741\text{ m}] = \mathbf{58.1\ kPa}$$

6.66 Pt. 1 at oil surface; Pt. 2 outside nozzle.

$$\frac{p_1}{\gamma_o}+z_1+\frac{\upsilon_1^2}{2g}=\frac{p_2}{\gamma_o}+z_2+\frac{\upsilon_2^2}{2g}\ ;\ p_1=0,\ \upsilon_1=0,\ p_2=0$$

$$\upsilon_2=\sqrt{2g(z_1-z_2)}=\sqrt{2(9.81\text{ m/s}^2)(3.0\text{ m})}=\mathbf{7.67\ m/s}$$

$$Q=A_2\upsilon_2=\frac{\pi(.035\text{ m})^2}{4}\times\frac{7.67\text{ m}}{\text{s}}=\frac{7.38\times10^{-3}\text{ m}^3}{\text{s}}$$

$$\upsilon_A=\upsilon_B=\frac{Q}{A_A}=\frac{7.38\times10^{-3}\text{ m}^3/\text{s}}{\pi(0.10\text{ m})^2/4}=\frac{0.940\text{ m}}{\text{s}};\ \frac{\upsilon_A^2}{2g}=\frac{\upsilon_B^2}{2g}=\frac{0.94^2\text{ m}^2/\text{s}^2}{2(9.81\text{ m/s}^2)}=\mathbf{0.0450\ m}$$

$$\frac{p_1}{\gamma_o}+z_1+\frac{\upsilon_1^2}{2g}=\frac{p_A}{\gamma_o}+z_A+\frac{\upsilon_A^2}{2g}\ ;\ p_1=0,\ \upsilon_1=0$$

$$p_A=\gamma_o\left[(z_1-z_A)-\frac{\upsilon_A^2}{2g}\right]=(0.85)\left(\frac{9.81\text{ m}}{\text{s}^2}\right)[4.0-0.045]\text{m}=\mathbf{33.0\ kPa}$$

$$\frac{p_1}{\gamma_o}+z_1+\frac{\gamma_1^2}{2g}=\frac{p_B}{\gamma_o}+z_B+\frac{\upsilon_B^2}{2g}\ ;\ p_1=0,\ \upsilon_1=0$$

$$p_B=\gamma_o\left[(z_1-z_B)-\frac{\upsilon_B^2}{2g}\right]=(0.85)(9.81)[3.0-0.045]=\mathbf{24.6\ kPa}$$

6.67 $\frac{p_1}{\gamma}+z_1+\frac{\upsilon_1^2}{2g}=\frac{p_2}{\gamma}+z_2+\frac{\upsilon_2^2}{2g}$: Pt. 1 at water surface; Pt. 2 outside nozzle; $\upsilon_1=0, p_2=0$

$$\upsilon_2=\sqrt{2g(p_1/\gamma+z_1-z_2)}=\sqrt{2\left(\frac{32.2\text{ ft}}{\text{s}^2}\right)\left[\frac{20\text{ lb}}{\text{in}^2}\frac{\text{ft}^3}{62.4\text{ lb}}\frac{144\text{ in}^2}{\text{ft}^2}+8.0\text{ ft}\right]}=59.06\text{ ft/s}$$

$$Q=A_2\upsilon_2=\frac{\pi(3\text{ in})^2}{4}\times\frac{59.06\text{ ft}}{\text{s}}\times\frac{\text{ft}^2}{144\text{ in}^2}=2.90\text{ ft}^3/\text{s}$$

6.68 $\frac{p_1}{\gamma}+z_1+\frac{\upsilon_1^2}{2g}=\frac{p_2}{\gamma}+z_2+\frac{\upsilon_2^2}{2g}$: Pt. 1 at water surface; Pt. 2 outside nozzle; $\upsilon_1=0, p_2=0$

$$p_1=\gamma\left[(z_2-z_1)+\frac{\upsilon_2^2}{2g}\right]=\frac{62.4\text{ lb}}{\text{ft}^3}\left[-10\text{ ft}+\frac{(20)^2\text{ ft}^2/\text{s}^2}{2(32.2\text{ ft/s}^2)}\right]\frac{1\text{ ft}^2}{144\text{ in}^2}=\mathbf{-1.64\ psig}$$

6.69 $\frac{p_1}{\gamma}+z_1+\frac{\upsilon_1^2}{2g}=\frac{p_2}{\gamma}+z_2+\frac{\upsilon_2^2}{2g}$: Pt. 1 at water surface; Pt. 2 outside nozzle;

$p_1=p_2=0,\ \upsilon_1=0$

$$\upsilon_2=\sqrt{2g(z_1-z_2)}=\sqrt{2(9.81\text{ m/s}^2(4.6\text{ m})}=9.50\text{ m/s}$$

$$Q=A_2\upsilon_2=\frac{\pi(.025\text{ m})^2}{4}\times9.50\text{ m/s}=\mathbf{4.66\times10^{-3}\ m^3/s}$$

$$\frac{p_1}{\gamma}+z_1+\frac{\upsilon_1^2}{2g}=\frac{p_A}{\gamma}+z_A+\frac{\upsilon_A^2}{2g}: \; p_1 = 0, \upsilon_1 = 0, z_1 = z_A$$

$$\upsilon_A=\upsilon_B=\upsilon_2\frac{A_2}{A_A}=\upsilon_2\left(\frac{D_2}{D_A}\right)^2 = \upsilon_2/4 = 2.375 \text{ m/s}$$

$$p_A=\gamma\left[\frac{-\upsilon_A^2}{2g}\right]=\frac{9.81\,\text{kN}}{\text{m}^3}\left[\frac{-(2.375)^2\,\text{m}^2/\text{s}^2}{2(9.81\,\text{m/s}^2)}\right] = \mathbf{-2.82\ kPa}$$

$$\frac{p_1}{\gamma}+z_1+\frac{\upsilon_1^2}{2g}=\frac{p_B}{\gamma}+z_B+\frac{\upsilon_B^2}{2g}\;;\; p_1 = 0, \upsilon_1 = 0$$

$$p_B=\gamma\left[(z_1-z_B)-\frac{\upsilon_B^2}{2g}\right]=9.81\left[-0.90-\frac{(2.375)^2}{2(9.81)}\right] = \mathbf{-11.65\ kPa}$$

6.70 (See Prob. 6.69) $\upsilon_2 = \frac{Q}{A_2}=\frac{7.1\times10^{-3}\,\text{m}^3/\text{s}}{\pi(.025\,\text{m})^2/4} = 14.46 \text{ m/s}$

$$z_1 - z_2 = X = \frac{\upsilon_2^2}{2g}=\frac{(14.46)^2\,\text{m}^2/\text{s}^2}{[2(9.81\,\text{m/s}^2)]} = \mathbf{10.66\ m}$$

6.71 (See Prob. 6.69) $\upsilon_B = \frac{Q}{A_B}=\frac{5.6\times10^{-3}\,\text{m}^3/\text{s}}{\pi(.05\,\text{m})^2/4} = 2.85 \text{ m/s}$

Minimum pressure exists at B, highest point in system.

$$\frac{p_1}{\gamma}+z_1+\frac{\upsilon_1^2}{2g}=\frac{p_B}{\gamma}+z_B+\frac{\upsilon_B^2}{2g}\;;\; p_1 = 0, \upsilon_1 = 0$$

$$z_B - z_1 = \mathbf{Y} = \frac{-p_B}{\gamma}-\frac{\upsilon_B^2}{2g}=\frac{-(-18\,\text{kN})}{\text{m}^2(9.81\,\text{kN/m}^3)}-\frac{(2.85)^2\,\text{m}^2/\text{s}^2}{2(9.81\,\text{m/s}^2)} = \mathbf{1.42\ m}$$

6.72 Analysis for υ_2, Q, p_A, p_B same as Prob. 6.69.

$$\upsilon_2 = \sqrt{2g(z_1-z_2)} = \sqrt{2(9.81)(10)} = 14.01 \text{ m/s}$$

$$Q = A_2\upsilon_2 = \frac{\pi(.025)^2}{4} \times 14.01 = 6.88 \times 10^{-3} \text{ m}^3/\text{s}$$

$$\upsilon_A=\upsilon_B=\upsilon_C=\upsilon_D=\upsilon_2/4$$

$$\upsilon_A = 3.502 \text{ m/s}$$

$$p_A = \gamma_o\left[\frac{-\upsilon_A^2}{2g}\right]=(0.86)(9.81)\left[\frac{-(3.502)^2}{2(9.81)}\right] = (8.437)[-0.625] = \mathbf{-5.27\ kPa}$$

$$p_B = \gamma_o\left[(z_1-z_B)-\frac{\upsilon_B^2}{2g}\right] = (8.437)[-3.0 - 0.625] = \mathbf{-30.58\ kPa}$$

$p_C = p_A = -5.27$ kPa

$$\frac{p_1}{\gamma_o} + z_1 + \frac{\upsilon_1^2}{2g} = \frac{p_D}{\gamma_o} + z_D + \frac{\upsilon_D^2}{2g} \; ; \; p_1 = 0, \upsilon_1 = 0$$

$$\boldsymbol{p_D} = \gamma_o\left[(z_1 - z_D) - \frac{\upsilon_D^2}{2g}\right] = (8.437)[10.0 - 0.625] = \mathbf{79.1\ kPa}$$

6.73 $$\frac{p_A}{\gamma} + z_A + \frac{\upsilon_A^2}{2g} = \frac{p_B}{\gamma} + z_B + \frac{\upsilon_B^2}{2g} \; ; z_A = z_B$$

$$\frac{\upsilon_A^2 - \upsilon_B^2}{2g} = \frac{p_B - p_A}{\gamma_W} = \frac{(42-50)\text{ lb ft}^3\ (144\text{ in}^2)}{\text{in}^2\ (62.4\text{ lb})\text{ft}^2} = -18.46\text{ ft}$$

$$\upsilon_A = \upsilon_B\frac{A_B}{A_A} = \upsilon_B\left(\frac{D_B}{D_A}\right)^2 = \upsilon_B\left(\frac{1}{2}\right)^2 = 0.25\upsilon_B;\ \upsilon_A^2 = 0.0625\,\upsilon_B^2$$

$$0.0625\upsilon_B^2 - \upsilon_B^2 = 2g(-18.46\text{ ft})$$

$$-0.9375\upsilon_B^2 = 2g(-18.46\text{ ft})$$

$$\boldsymbol{\upsilon_B} = \sqrt{\frac{2(32.2\text{ ft})(-18.46\text{ ft})}{\text{s}^2(-0.9375)}} = \mathbf{35.6\ ft/s}$$

6.74 $$\frac{p_A}{\gamma_o} + z_A + \frac{\upsilon_A^2}{2g} = \frac{p_B}{\gamma_o} + z_B + \frac{\upsilon_B^2}{2g} \; ; \; z_A = z_B$$

$$\frac{\upsilon_A^2 - \upsilon_B^2}{2g} = \frac{p_B - p_A}{\gamma_o} = \frac{(28.2-25.6)\text{ lb ft}^3\ (144\text{ in}^2)}{\text{in}^2\ (0.90)(62.4\text{ lb})\text{ft}^2} = 6.667\text{ ft}$$

$$\upsilon_A = \upsilon_B\frac{A_B}{A_A} = \upsilon_B\left(\frac{D_B}{D_A}\right)^2 = \upsilon_B\left(\frac{8}{5}\right)^2 = 2.56\upsilon_B;\ \upsilon_A^2 = 6.55\upsilon_B^2$$

$$6.55\upsilon_B^2 - \upsilon_B^2 = 2g(6.667\text{ ft})$$

$$5.55\upsilon_B^2 = 2g(6.667\text{ ft})$$

$$\upsilon_B = \sqrt{\frac{2(32.2)(6.667)}{5.55}}\text{ ft/s} = 8.79\text{ ft/s}$$

$$\boldsymbol{Q} = A_B\upsilon_B = \frac{\pi(8\text{ in})^2}{4}\times\frac{8.79\text{ ft}}{\text{s}}\times\frac{\text{ft}^2}{144\text{ in}^2} = \mathbf{3.07\ ft^3/s}$$

6.75 $\frac{p_A}{\gamma_w} + z_A + \frac{\upsilon_A^2}{2g} = \frac{p_B}{\gamma_w} + z_B + \frac{\upsilon_B^2}{2g}$; $z_A = z_B$

$$\frac{p_A - p_B}{\gamma_w} = \frac{\upsilon_B^2 - \upsilon_A^2}{2g} = \frac{[\upsilon_A(A_A/A_B)]^2 - \upsilon_A^2}{2g} = \frac{[\upsilon_A(D_A/D_B)^2]^2 - \upsilon_A^2}{2g}$$

$$= \frac{16\upsilon_A^2 - \upsilon_A^2}{2g} = \frac{15\upsilon_A^2}{2g}$$

Manometer: $p_A + \gamma_w y + \gamma_w h - \gamma_m h - \gamma_w y = p_B$ [cancel terms with y]

$p_A - p_B = \gamma_m h - \gamma_w h = h(\gamma_m - \gamma_w) = h(13.54\gamma_w - \gamma_w) = h(12.54\gamma_w)$

$$\frac{p_A - p_B}{\gamma_w} = 12.54h = \frac{15\upsilon_A^2}{2g}$$

$$\upsilon_A = \sqrt{\frac{2g(12.54)(h)}{15}} = \sqrt{\frac{2(9.81\text{ m})(12.54)(0.250\text{ m})}{\text{s}^2(15)}} = 2.025\text{ m/s}$$

$Q = A_A\upsilon_A = [\pi(.050\text{ m})^2/4](2.025\text{ m/s}) = \mathbf{3.98 \times 10^{-3}\ m^3/s}$

6.76 (See Prob. 6.75) $\upsilon_A = \upsilon_B\left(\frac{A_B}{A_A}\right) = \upsilon_B\left(\frac{D_B}{D_A}\right)^2 = 0.25\upsilon_B = 0.25(10) = 2.50\text{ m/s}$

$$12.54h = \frac{15\upsilon_A^2}{2g} = \frac{15(2.50)^2\text{ m}^2/\text{s}^2}{2(9.81\text{ m/s}^2)} = 4.778\text{ m}$$

$\boldsymbol{h} = 4.778\text{ m}/12.54 = \mathbf{0.381\ m}$

6.77 $\frac{p_A}{\gamma_o} + z_A + \frac{\upsilon_A^2}{2g} = \frac{p_B}{\gamma_o} + z_B + \frac{\upsilon_B^2}{2g}$

$$\frac{\upsilon_A^2 - \upsilon_B^2}{2g} = \frac{p_B - p_A}{\gamma_o} + (z_B - z_A)$$

$$\upsilon_B = \upsilon_A\frac{A_A}{A_B} = \upsilon_A\left(\frac{D_A}{D_B}\right)^2 = \upsilon_A\left(\frac{100}{50}\right)^2 = 4\upsilon_A$$

$$\upsilon_B^2 = 16\upsilon_A^2$$

$$\upsilon_A^2 - \upsilon_B^2 = \upsilon_A^2 - 16\upsilon_A^2 = -15\upsilon_A^2$$

Manometer: $p_A + \gamma_o(0.35\text{ m}) - \gamma_w(0.20\text{ m}) - \gamma_o(0.75\text{ m}) = p_B$

$p_B - p_A = -\gamma_w(0.20\text{ m}) - \gamma_o(0.40)\text{m}$

$$\frac{p_B - p_A}{\gamma_o} = \frac{-\gamma_w(0.20\text{ m})}{\gamma_o} - 0.40 = \frac{-9.81(0.20\text{ m})}{8.64} - 0.40\text{ m} = -0.627\text{ m}$$

$z_B - z_A = 0.60$

$-15\upsilon_A^2 = 2g[-0.627\text{ m} + 0.60\text{ m}] = 2g(-0.027\text{ m})$

$\upsilon_A = \sqrt{2(9.81\text{ m/s}^2)(-0.027\text{ m})/-15} = 0.188\text{ m/s}$

$\boldsymbol{Q} = A_A\upsilon_A = \frac{\pi(0.10\text{ m})^2}{4} \times 0.188\text{ m/s} = \mathbf{1.48 \times 10^{-3}\ m^3/s}$

6.78 $\dfrac{\upsilon_A^2-\upsilon_B^2}{2g}=\dfrac{p_B-p_A}{\gamma_w}+(z_B-z_A)$

$z_B - z_A = 0.25$ m

$\upsilon_B = \upsilon_A\left(\dfrac{D_A}{D_B}\right)^2=\upsilon_A\left(\dfrac{200}{75}\right)^2=7.11\upsilon_A$

$\upsilon_B^2=50.6\upsilon_A^2$

$\upsilon_A^2-\upsilon_B^2=\upsilon_A^2-50.6\upsilon_A^2=-49.6\upsilon_A^2$

Manometer: $p_A + \gamma_o y + \gamma_o(0.60\text{ m}) - \gamma_G(0.60\text{ m}) - \gamma_o y - \gamma_o(0.25\text{ m}) = p_B$

$p_B - p_A = \gamma_o(0.35\text{ m}) - \gamma_G(0.60\text{ m})$

$\dfrac{p_B-p_A}{\gamma_o}=0.35-\dfrac{(1.40)(9.81\text{ kN/m}^3)(0.60\text{ m})}{(0.90)(9.81\text{ kN/m}^3)}=-0.583\text{ m}$

$-49.6\upsilon_A^2 = 2g[-0.583\text{ m} + 0.25\text{ m}] = 2g(-0.333\text{ m})$

$\upsilon_A = \sqrt{2(9.81\text{ m/s}^2)(-0.333\text{ m})/(-49.6)} = 0.363$ m/s

$Q = A_A\upsilon_A = [\pi(.20\text{ m})^2/4](0.363\text{ m/s}) = \mathbf{1.14\times10^{-2}\ m^3/s}$

6.79 $\dfrac{p_A}{\gamma_o}+z_A+\dfrac{\upsilon_A^2}{2g}=\dfrac{p_B}{\gamma_o}+z_B+\dfrac{\upsilon_B^2}{2g}$

① $\dfrac{p_A-p_B}{\gamma_o}+z_A-z_B=\dfrac{\upsilon_B^2-\upsilon_A^2}{2g}$

Let $z_A - z_B = X$
Let y = Distance from B to surface of Mercury.

$\upsilon_B=\upsilon_A\dfrac{A_A}{A_B}=\upsilon_A\left(\dfrac{D_A}{D_B}\right)^2=\upsilon_A\left(\dfrac{4}{2}\right)^2=4\upsilon_A$

Manometer: $p_B + \gamma_o y + \gamma_m h - \gamma_o h - \gamma_o y - \gamma_o X = p_A$ [cancel terms with y]

$\dfrac{p_A-p_B}{\gamma_o}=\dfrac{\gamma_m h}{\gamma_o}-h-X=\dfrac{13.54\gamma_w}{0.90\gamma_w}\cdot h-h-X=14.04h-X$

In ①: $14.04h-X+X=\dfrac{16\upsilon_A^2-\upsilon_A^2}{2g}=\dfrac{15\upsilon_A^2}{2g}$

$\upsilon_A=\sqrt{\dfrac{2g(14.04)(h)}{15}}=\dfrac{\sqrt{2(32.2\text{ ft/s}^2)(14.04)(28\text{ in})}}{15(12\text{ in/ft})}=11.86$ ft/s

$Q=A_A\upsilon_A=\dfrac{\pi(4\text{ in})^2}{4}\times\dfrac{11.86\text{ ft}}{\text{s}}\times\dfrac{\text{ft}^2}{144\text{ in}^2}=\mathbf{1.035\ ft^3/s}$

6.80 (See also Prob. 6.79) $\upsilon_A = \upsilon_B/4 = 10.0\text{ ft/s}/4 = 2.50$ ft/s

$14.04h = 15\upsilon_A^2/2g$

$h=\dfrac{15(2.50\text{ ft/s})^2}{2(32.2\text{ ft/s}^2)(14.04)}=0.1037\text{ ft}\times\dfrac{12\text{ in}}{\text{ft}}=\mathbf{1.24\ in}$

6.81 $\dfrac{p_A}{\gamma} + z_A + \dfrac{\upsilon_A^2}{2g} = \dfrac{p_B}{\gamma} + z_B + \dfrac{\upsilon_B^2}{2g}$

$$p_B = p_A + \gamma\left[\frac{\upsilon_A^2 - \upsilon_B^2}{2g}\right]$$

$$\upsilon_A = \frac{Q}{A_A} = \frac{4.0\ \text{ft}^3/\text{s}}{\pi(6\ \text{in})^2/4} \cdot \frac{144\ \text{in}^2}{\text{ft}^2} = 20.37\ \text{ft/s}$$

$$\upsilon_B = \upsilon_A \cdot \left(\frac{D_A}{D_B}\right)^2 = 4\upsilon_A = 81.49\ \text{ft/s}$$

$$p_B = 60.0\ \text{psig} + (0.67)\left(\frac{62.4\ \text{lb}}{\text{ft}^3}\right)\left[\frac{(20.37^2 - 81.49^2)\text{ft}^2/\text{s}^2}{2(32.2\ \text{ft/s}^2)}\right]\frac{1\ \text{ft}^2}{144\ \text{in}^2} = \mathbf{31.94\ psig}$$

6.82 $\dfrac{p_A}{\gamma_o} + z_A + \dfrac{\upsilon_A^2}{2g} = \dfrac{p_B}{\gamma_o} + z_B + \dfrac{\upsilon_B^2}{2g}$

(1) $\dfrac{p_A - p_B}{\gamma_o} + z_A - z_B = \dfrac{\upsilon_B^2 - \upsilon_A^2}{2g}$

$$\upsilon_B = \upsilon_A \cdot \frac{A_A}{A_B} = \upsilon_A \cdot \frac{0.08840\ \text{ft}^2}{0.02333\ \text{ft}^2} = 3.789\upsilon_A$$

$$\upsilon_B^2 - \upsilon_A^2 = (3.789\upsilon_A)^2 - \upsilon_A^2 = 13.36\upsilon_A^2$$

$$z_A - z_B = -24\ \text{in}$$

Manometer: $p_B + \gamma_o(24\ \text{in}) + \gamma_o(6\ \text{in}) + \gamma_w(8\ \text{in}) - \gamma_o(8\ \text{in}) - \gamma_o(6\ \text{in}) = p_A$

$p_A - p_B = \gamma_o(16\ \text{in}) + \gamma_w(8\ \text{in})$

$$\frac{p_A - p_B}{\gamma_o} = 16\ \text{in} + \frac{\gamma_w}{\gamma_o}(8\ \text{in}) = 16\ \text{in} + \frac{62.4\ \text{lb/ft}^3}{55.0\ \text{lb/ft}^3}(8\ \text{in}) = 25.08\ \text{in}$$

---

in (1) $25.08\ \text{in} - 24.0\ \text{in} = 13.36\upsilon_A^2/2g$

$$\upsilon_A = \sqrt{\frac{2g(1.08\ \text{in})}{13.36}} = \sqrt{\frac{2(32.2\ \text{ft/s}^2)(1.08\ \text{in})}{13.36(12\ \text{in/ft})}} = 0.659\ \text{ft/s}$$

$$Q = A_A\upsilon_A = 0.08840\ \text{ft}^2 \times \frac{0.659\ \text{ft}}{\text{s}} = \mathbf{0.0582\ ft^3/s}$$

6.83 Plot shown below. Data computed as follows.

Pt. 1: Tank surface - Pt. 2: Outside nozzle - Ref. level at D.

Pt. 1: $z_1 = 10.0$ m; $\dfrac{\upsilon_1^2}{2g} = 0$; $\dfrac{p_1}{\gamma} = 0$ See Problem 6.72 for data.

Pt. A: $z_A = 10.0$ m; $\dfrac{\upsilon_A^2}{2g} = \dfrac{(3.502\text{ m/s})^2}{2(9.81\text{ m/s}^2)} = +0.625\text{ m} = \dfrac{\upsilon_B^2}{2g} = \dfrac{\upsilon_C^2}{2g} = \dfrac{\upsilon_D^2}{2g}$

$$\frac{p_A}{\gamma} = \frac{-5.27\text{ kN/m}^2}{8.437\text{ kN/m}^3} = -0.625\text{ m} = \frac{p_C}{\gamma}$$

Pt. B: $z_B = 13.0$ m; $\dfrac{\upsilon_B^2}{2g} = 0.625$ m

$$\frac{p_B}{\gamma} = \frac{-30.58}{8.437} = -3.625\text{ m}$$

Pt. C: Same as Pt. A

Pt. D: $z_D = 0$; $\dfrac{\upsilon_D^2}{2g} = 0.625\text{ m}$; $\dfrac{p_D}{\gamma} = \dfrac{79.1}{8.437} = 9.375\text{ m}$

Pt. 2: $z_2 = 0$; $\dfrac{\upsilon_2^2}{2g} = \dfrac{(14.01)^2}{2(9.81)}\text{m} = 10.0$ m; $\dfrac{p_2}{\gamma} = 0$

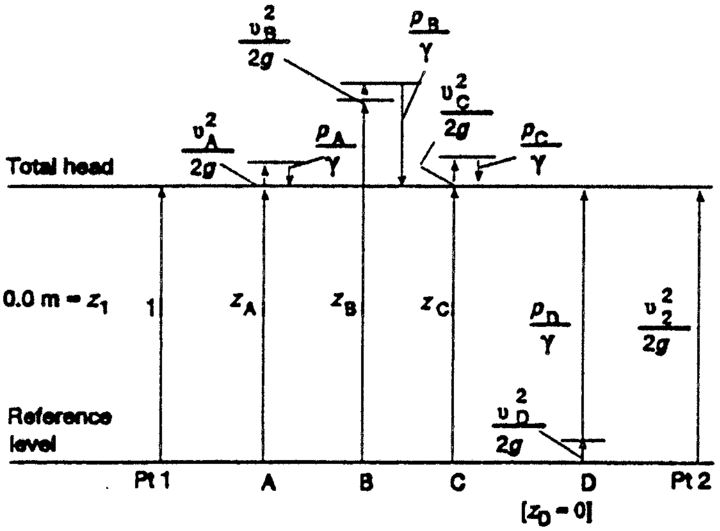

6.84 See Prob. 6.73 for data. Let $z_A = z_B = 0$

$$\left.\begin{array}{l} \text{Pt. A: } \dfrac{p_A}{\gamma} = \dfrac{50.0\text{ lb}}{\text{in}^2} \times \dfrac{144\text{ in}^2}{\text{ft}^2} \times \dfrac{\text{ft}^3}{62.4\text{ lb}} = 115.4\text{ ft} \\[2ex] \dfrac{\upsilon_A^2}{2g} = \dfrac{(0.25\upsilon_B)^2}{2g} = \dfrac{[(0.25)(35.6\text{ ft/s})]^2}{2(32.2\text{ ft/s}^2)} = 1.23\text{ ft} \end{array}\right] - \text{Total head} = 116.6\text{ ft}$$

$$\left.\begin{array}{l} \text{Pt. B: } \dfrac{p_B}{\gamma} = \dfrac{(42.0)(144)}{62.4} = 96.9\text{ ft} \\[2ex] \dfrac{\upsilon_B^2}{2g} = \dfrac{(35.6)^2}{2(32.2)} = 19.7\text{ ft} \end{array}\right] - \text{Total head} = 116.6\text{ ft}$$

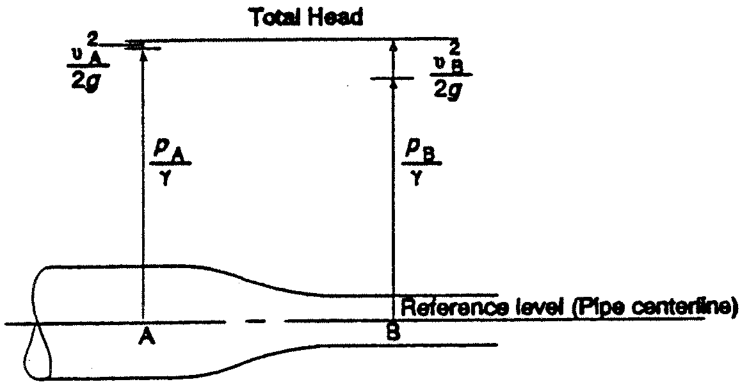

6.85 $\frac{p_A}{\gamma} + z_A + \frac{\upsilon_A^2}{2g} = \frac{p_G}{\gamma} + z_G + \frac{\upsilon_G^2}{2g}$ (Neglecting energy losses); $p_A = p_G = 0$, $\upsilon_A = 0$

$\upsilon_G = \sqrt{2g(z_A - z_G)} = \sqrt{2(32.2\text{ ft/s}^2)(30\text{ ft})} = 43.95$ ft/s

$A_G = \frac{\pi(1.25\text{ in})^2}{4} \times \frac{\text{ft}^2}{144\text{ in}^2} = 8.522 \times 10^{-3}\text{ ft}^2$

Velocity in 2-in Sch 40 pipe: $\upsilon_2 = \upsilon_G \times \frac{A_G}{A_2} = (43.95)\frac{8.522 \times 10^{-3}}{0.02333} = 16.06$ ft/s

Velocity in 6-in Sch 40 pipe: $\upsilon_6 = \upsilon_G \times \frac{A_G}{A_6} = (43.95)\frac{8.522 \times 10^{-3}}{0.2006} = 1.867$ ft/s

$\upsilon_G^2/2g = (43.95\text{ ft/s})^2/2(32.2\text{ ft/s}^2) = 30.0$ ft

$\upsilon_2^2/2g = (16.06)^2/64.4 = 4.00\text{ ft} = \upsilon_B^2/2g = \upsilon_D^2/2g = \upsilon_E^2/2g = \upsilon_F^2/2g$

$\upsilon_6^2/2g = (1.867)^2/64.4 = 0.054\text{ ft} = \upsilon_C^2/2g$

Point B: $\frac{p_A}{\gamma} + z_A + \frac{\upsilon_A^2}{2g} = \frac{p_B}{\gamma} + z_B + \frac{\upsilon_B^2}{2g}$; $p_A = 0$, $\upsilon_A = 0$

$p_B = \gamma\left[(z_A - z_B) - \frac{\upsilon_B^2}{2g}\right] = \frac{62.4\text{ lb}}{\text{ft}^3}[15.0\text{ ft} - 4.0\text{ ft}]\frac{1\text{ ft}^2}{144\text{ in}^2} = 4.77$ psig

$\frac{p_B}{\gamma} = (z_A - z_B) - \frac{\upsilon_B^2}{2g} = 15\text{ ft} - 4.0\text{ ft} = 11.0$ ft

Same values at point D.

Point C: $\frac{p_C}{\gamma} = (z_A - z_C) - \frac{\upsilon_C^2}{2g} = 15.0\text{ ft} - 0.054\text{ ft} = 14.95$ ft

$p_C = \gamma(14.95\text{ ft}) = (62.4\text{ lb/ft}^3)(14.95\text{ ft})(1\text{ ft}^2/144\text{ in}^2) = 6.48$ psig

---

Point E: $\frac{p_E}{\gamma} = (z_A - z_E) - \upsilon_E^2/2g = 9\text{ ft} - 4.0\text{ ft} = 5.0$ ft

$p_E = \gamma(5.0\text{ ft}) = (62.4)(5.0)/144 = 2.17$ psig

Point F: $\frac{p_F}{\gamma} = (z_A - z_F) - \frac{\upsilon_F^2}{2g} = 30.0\text{ ft} - 4.0\text{ ft} = 26.0$ ft

$p_F = \gamma(26.0\text{ ft}) = (62.4)(26.0)/144 = 11.27$ psig

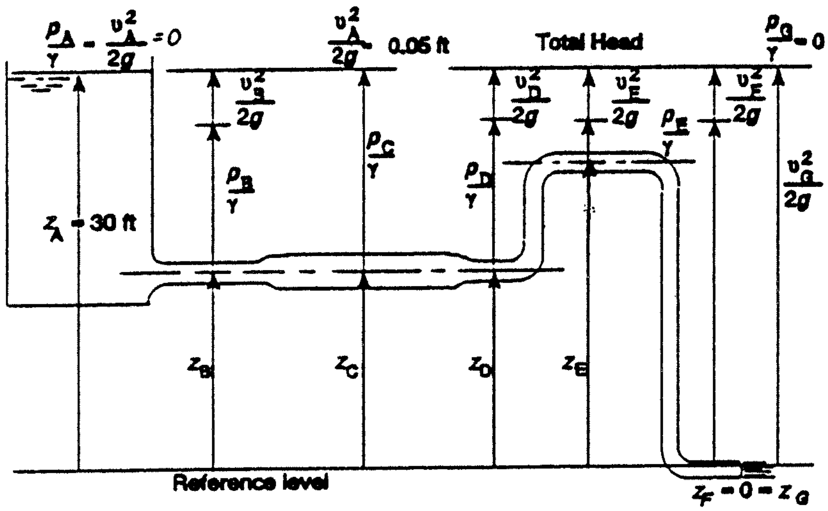

6.86 With Mercury at wall of throat, $h/2 = 0.30$ m; $h = 0.60$ m

$$\frac{p_1}{\gamma_w} + z_1 + \frac{\upsilon_1^2}{2g} = \frac{p_t}{\gamma_w} + z_t + \frac{\upsilon_t^2}{2g} \qquad \upsilon_t = \upsilon_1 \frac{A_1}{A_t} = \upsilon_1 \left(\frac{D_1}{D_t}\right)^2 = \left(\frac{75}{25}\right)^2 = 9\upsilon_1$$

$$\frac{p_1 - p_t}{\gamma_w} = \frac{\upsilon_t^2 - \upsilon_1^2}{2g} = \frac{(9\upsilon_1)^2 - \upsilon_1^2}{2g} = \frac{80\upsilon_1^2}{2g}$$

Manometer: $p_1 + \gamma_w(D_t/2) + \gamma_w(0.60\text{ m}) - \gamma_m(0.60\text{ m}) - \gamma_w(D_t/2) = p_t$

$$\frac{p_1 - p_t}{\gamma_w} = \frac{\gamma_m(0.60\text{ m})}{\gamma_w} - 0.60\text{ m} = 13.54(0.60) - 0.60 = 7.52\text{ m}$$

$$\upsilon_1 = \sqrt{\frac{2g(7.52\text{ m})}{80}} = \sqrt{\frac{2(9.81)\text{m}(7.52\text{ m})}{\text{s}^2(80)}} = 1.36\text{ m/s}$$

$Q = A_1\upsilon_1 = \pi(0.075\text{ m})^2/4 \times 1.36\text{ m/s} = \mathbf{6.00 \times 10^{-3}\ m^3/s}$

6.87 $\frac{p_1}{\gamma}+z_1+\frac{\upsilon_1^2}{2g}=\frac{p_2}{\gamma}+z_2+\frac{\upsilon_2^2}{2g}$: $\upsilon_2=\sqrt{2g(z_1-z_2)}=\sqrt{2gh}$ = Velocity of jet

h(ft)	υ(ft/s)
10	25.4
8	22.7
6	19.7
4	16.1
2	11.4
1.5	9.83
1.0	8.02
0.5	5.67
0	0

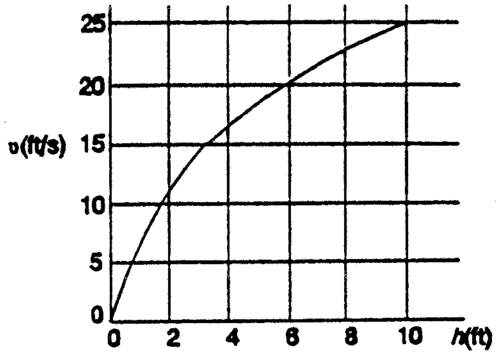

6.88 $Q = 200\text{ gal/min} \times \frac{1\text{ ft}^3\text{/s}}{449\text{ gal/min}} = 0.445\text{ ft}^3\text{/s}$

$\upsilon_j=\frac{Q}{A}=\frac{0.445\text{ ft}^3\text{/s}\ \ 144\text{ in}^2}{\pi(3.00\text{ in})^2/4(\text{ft}^2)}=\frac{9.07\text{ ft}}{\text{s}}\sqrt{2gh}$ (See Prob 6.87)

$h=\frac{\upsilon_j^2}{2g}=\frac{(9.07\text{ ft/s})^2}{2(32.2\text{ ft/s}^2)}=\mathbf{1.28\text{ ft}}$

Torricelli's theorem

6.89 $\frac{p_1}{\gamma}+z_1+\frac{\upsilon_1^2}{2g}=\frac{p_2}{\gamma}+z_2+\frac{\upsilon_2^2}{2g}$: $\upsilon_2=\sqrt{2g(z_1-z_2)}=\sqrt{2gh}$

Ref. Fig. 6.37; Pt. 1 at tank surface; Pt. 2 in jet outside orifice

6.90 $h=\frac{\upsilon_j^2}{2g}=\frac{(9.07)^2\text{ ft}^2\text{/s})^2}{2(32.2\text{ ft/s}^2)}=\mathbf{1.28\text{ ft}}$

6.91 To the level of the fluid surface in the tank.
1.675 m above the outlet nozzle.

6.92 h = 3.50 ft – 1.0 ft = 2.50 ft = Depth of fluid above nozzle.

$h_{total}=h+\frac{p}{\gamma}=2.50\text{ ft}+\frac{12.0\text{ lb}\ \ \text{ft}^3\ \ 144\text{ in}^2}{\text{in}^2\ \ 62.4\text{ lb}\ \ \text{ft}^2}=2.50+27.69=\mathbf{30.19\text{ ft}}$

6.93 $28.0\text{ ft} = h + p/\gamma = 4.50\text{ ft} + p_1/\gamma$

$p_1=\gamma[28-4.50]=\frac{62.4\text{ lb}}{\text{ft}^3}\times 23.5\text{ ft}\times\frac{1\text{ ft}^2}{144\text{ in}^2}=\mathbf{10.18\text{ psig}}$

6.94 $9.50 \text{ m} = h + p/\gamma = 1.50 \text{ m} + p_1/\gamma$

$$p_1 = \gamma[9.50 - 1.50] = \frac{9.81 \text{ kN}}{\text{m}^3} \times 8.0 \text{ m} = 78.48 \text{ kPa}$$

Flow due to a falling head

6.95 $$t_2 - t_1 = \frac{2(A_t / A_j)}{\sqrt{2g}}\left(h_1^{1/2} - h_2^{1/2}\right) = \frac{2(400)}{\sqrt{2(9.81)}}(2.68^{1/2} - 0) = \mathbf{296\ s}\ [4 \text{ min}, 56 \text{ s}]$$

$A_t = \pi(3.00 \text{ m})^2/4 = 7.07 \text{ m}^2$; $A_j = \pi(.15 \text{ m})^2/4 = 0.0177 \text{ m}^2$

$A_t/A_j = 7.07/0.0177 = 400$

6.96 $A_t/A_j = (D_t/D_j)^2 = (300/20)^2 = 225$

$$t_2 - t_1 = \frac{2(225)}{\sqrt{2(9.81)}}\left(.055^{1/2} - 0\right) = \mathbf{23.8\ s}$$

6.97 $A_t/A_j = (D_t/D_j)^2 = (12/0.50)^2 = 576$

$$t_2 - t_1 = \frac{2(576)}{\sqrt{2(32.2 \text{ ft/s}^2)}}\left(15.0 \text{ ft}^{1/2} - 0\right) = \mathbf{556\ s}\ (9 \text{ min}, 16 \text{ s})$$

6.98 $A_t/A_j = (D_t/D_j)^2 = (22.0/0.50)^2 = 1936$

$g = (32.2 \text{ ft/s}^2)(12 \text{ in/ft}) = 386 \text{ in/s}^2$

$$t_2 - t_1 = \frac{2(A_t - A_j)}{\sqrt{2g}}\left(h_1^{1/2} - h_2^{1/2}\right) = \frac{2(1936)}{\sqrt{2(386 \text{ in/s}^2)}}\left(18.5^{1/2} \text{ in} - 0\right) = \mathbf{599\ s}\ (9 \text{ min}, 59 \text{ s})$$

6.99 $A_t/A_j = (D_t/D_j)^2 = (2.25 \text{ m}/0.05 \text{ m})^2 = 2025$

$$t_2 - t_1 = \frac{2(2025)}{\sqrt{2(9.81)}}\left(2.68^{1/2} - 1.18^{1/2}\right) = \mathbf{504\ s}\ (8 \text{ min}, 24 \text{ s})$$

6.100 $A_t/A_j = (D_t/D_j)^2 = (1.25 \text{ m}/0.025 \text{ m})^2 = 2500$

$$t_2 - t_1 = \frac{2(2500)}{\sqrt{2(9.81)}}\left(1.38^{1/2} - 1.155^{1/2}\right) = \mathbf{113\ s}\ (1 \text{ min}, 53 \text{ s})$$

6.101 See Prob. 6.98: $g = 386 \text{ in/s}^2$

$$A_t/A_j = (D_t/D_j)^2 = \left(\frac{6.25 \text{ ft}(12 \text{ in/ft})}{0.625 \text{ in}}\right)^2 = 14400$$

$$t_2 - t_1 = \frac{2(14400)}{\sqrt{2(386)}}\left(38^{1/2} - 25.5^{1/2}\right) = \mathbf{1155\ s}\ (19 \text{ min}, 15 \text{ s})$$

6.102 $$A_t/A_j = (D_t/D_j)^2 = \left(\frac{46.5 \text{ ft}}{8.75 \text{ in}(1 \text{ ft}/12 \text{ in})}\right)^2 = 4067$$

$$t_2 - t_1 = \frac{2(4067)}{\sqrt{2(32.2 \text{ ft/s}^2)}}\left(23.0^{1/2} - 2.0^{1/2}\right) = \mathbf{3427\ s}\ (57 \text{ min}, 7 \text{ s})$$

6.103 See Prob. 6.97.

$$\frac{p}{\gamma}=\frac{5.0\ \text{lb}\ \text{ft}^3\ 144\ \text{in}^2}{\text{in}^2\ 62.4\ \text{lb}\ \text{ft}^2} = 11.54\ \text{ft};\ h_1 = 15.0\ \text{ft} + 11.54\ \text{ft} = 26.54\ \text{ft}$$

$$h_2 = 11.54\ \text{ft} = \frac{p}{\gamma}$$

$$t_2 - t_1 = \frac{2(576)}{\sqrt{2(32.2)}}\left(26.54^{1/2} - 11.54^{1/2}\right) = \mathbf{252\ s}\ (4\ \text{min},\ 12\ \text{s})$$

6.104 See Prob. 6.101.

$$\frac{p}{\gamma}=\frac{2.8\ \text{lb}\ \text{ft}^3\ 144\ \text{in}^2}{\text{in}^2\ 62.4\ \text{lb}\ \text{ft}^2} = 6.46\ \text{ft} \times \frac{12\ \text{in}}{\text{ft}} = 77.5\ \text{in}$$

$h_1 = 38$ in + 77.5 in = 115.5 in; $h_2 = 25.5$ in + 77.5 in = 100 in

$$t_2 - t_1 = \frac{2(14400)}{\sqrt{2(386)}}\left(115.5^{1/2} - 100^{1/2}\right) = \mathbf{774\ s}\ (12\ \text{min},\ 54\ \text{s})$$

6.105 See Prob. 6.96.

$$\frac{p}{\gamma}=\frac{20\ \text{kN}}{\text{m}^2}\frac{\text{m}^2}{9.81\ \text{kN}} = 2.039\ \text{m}$$

$h_1 = 0.055$ m + 2.039 m = 2.094 m; $h_2 = 2.039$ m

$$t_2 - t_1 = \frac{2(225)}{\sqrt{2(9.81)}}\left(2.094^{1/2} - 2.039^{1/2}\right) = \mathbf{1.94\ s}$$

6.106 See Prob. 6.100.

$$\frac{p}{\gamma}=\frac{35\ \text{kN}}{\text{m}^2}\frac{\text{m}^3}{9.81\ \text{kN}} = 3.57\ \text{m}$$

$h_1 = 1.38 + 3.57 = 4.95$ m; $h_2 = 1.155$ m + 3.57 m = 4.722 m

$$t_2 - t_1 = \frac{2(2500)}{\sqrt{2(9.81)}}\left(4.95^{1/2} - 4.722^{1/2}\right) = \mathbf{57.8\ s}$$

CHAPTER SEVEN

GENERAL ENERGY EQUATION

7.1 $\frac{p_1}{\gamma_o} + z_1 + \frac{\upsilon_1^2}{2g} - h_L = \frac{p_2}{\gamma_o} + z_2 + \frac{\upsilon_2^2}{2g}$; $z_1 = z_2$ and $\upsilon_1 = \upsilon_2$

$$h_L = \frac{p_1 - p_2}{\gamma_o} = \frac{(74.6 - 62.2)\text{ lb}}{\text{in}^2} \times \frac{\text{ft}^3}{(0.83)(62.4\text{ lb})} \times \frac{144\text{ in}^2}{\text{ft}^2} = \mathbf{34.5\ lb \cdot ft/lb}$$

7.2 $\frac{p_A}{\gamma_w} + z_A + \frac{\upsilon_A^2}{2g} - h_L = \frac{p_B}{\gamma_w} + z_B + \frac{\upsilon_B^2}{2g}$

$$p_B = p_A + \gamma_w\left[(z_A - z_B) + \frac{\upsilon_A^2 - \upsilon_B^2}{2g} - h_L\right]$$

$$\upsilon_B = \upsilon_A \frac{A_A}{A_B} = \upsilon_A\left(\frac{D_A}{D_B}\right)^2$$

$$\upsilon_B = 10\text{ ft/s}\left(\frac{4}{2}\right)^2 = 40\text{ ft/s}$$

$$p_B = 60\text{ psig} + \frac{62.4\text{ lb}}{\text{ft}^3}\left[30\text{ ft} + \frac{(10^2 - 40^2)\text{ft}^2/\text{s}^2}{2(32.2\text{ ft/s}^2)} - 25\text{ ft}\right]\frac{1\text{ ft}^2}{144\text{ in}^2} = \mathbf{52.1\ psig}$$

7.3 $\frac{p_1}{\gamma_w} + z_1 + \frac{\upsilon_1^2}{2g} - h_L = \frac{p_2}{\gamma_w} + z_2 + \frac{\upsilon_2^2}{2g}$

Pt. 1 at surface of water. $\upsilon_1 = 0$
Pt. 2 in stream outside nozzle. $p_2 = 0$

$$\upsilon_2 = \sqrt{2g\left[\frac{p_1}{\gamma_w} + (z_1 - z_2) - h_L\right]} = \sqrt{\frac{2(9.81\text{ m})}{\text{s}^2}\left[\frac{140\text{ kN m}^3}{\text{m}^2\ 9.81\text{kN}} + 2.4\text{ m} - 2.0\text{ m}\right]}$$

$$= 17.0\text{ m/s}$$

$Q = A_2\upsilon_2 = \pi(0.05\text{ m})^2/4 \times 17.0\text{ m/s} = \mathbf{3.33 \times 10^{-2}\ m^3/s}$

7.4 $\frac{p_1}{\gamma_w} + z_1 + \frac{\upsilon_1^2}{2g} - h_L = \frac{p_2}{\gamma_w} + z_2 + \frac{\upsilon_2^2}{2g}$

Pt. 1 at water surface.
Pt. 2 in stream outside pipe.

$p_1 = p_2 = 0$ and $\upsilon_1 = 0$

$$h_L = (z_1 - z_2) - \frac{\upsilon_2^2}{2g}$$

$$\upsilon_2 = \frac{Q}{A_2} = \frac{0.085\text{ m}^3/\text{s}}{1.864 \times 10^{-2}\text{ m}^2}$$

$\upsilon_2 = 4.56$ m/s

$$h_L = 10\text{ m} - \frac{(4.56\text{ m/s})^2}{2(9.81\text{ m/s}^2)} = 8.94\text{ m} = \mathbf{\frac{8.94\ N \cdot m}{N}}$$

7.5 $\frac{p_A}{\gamma_w} + z_A + \frac{\upsilon_A^2}{2g} - h_L = \frac{p_B}{\gamma_w} + z_B + \frac{\upsilon_B^2}{2g}$

$$h_L = \frac{p_A - p_B}{\gamma_w} + (z_A - z_B) + \frac{\upsilon_A^2 - \upsilon_B^2}{2g}$$

$$\upsilon_A = \frac{Q}{A_A} = \frac{0.20\text{ ft}^3/\text{s}}{0.02333\text{ ft}^2} = 8.57\text{ ft/s}$$

$$\upsilon_B = \frac{Q}{A_B} = \frac{0.20}{0.0884} = 2.26\text{ ft/s}$$

Manometer: $p_A + \gamma_w(10\text{ in}) - \gamma_m(14\text{ in}) - \gamma_w(44\text{ in}) = p_B$

$$\frac{p_A - p_B}{\gamma_w} = \frac{\gamma_m(14\text{ in}) + \gamma_w(34\text{ in})}{\gamma_w} = \frac{13.54\gamma_w(14\text{ in}) + \gamma_w(34\text{ in})}{\gamma_w} = 223.6\text{ in} \times \frac{1\text{ ft}}{12\text{ in}}$$
$$= 18.6\text{ ft}$$

$$h_L = 18.6\text{ ft} + (-4.0\text{ ft}) + \frac{(8.57^2 - 2.26^2)\text{ft}^2/\text{s}^2}{2(32.2\text{ ft/s}^2)} = \mathbf{15.7\text{ ft}}$$

7.6 $\frac{p_1}{\gamma_w} + z_1 + \frac{\upsilon_1^2}{2g} - h_L = \frac{p_2}{\gamma_w} + z_2 + \frac{\upsilon_2^2}{2g}$: $z_1 = z_2$ and $\upsilon_1 = \upsilon_2 : h_L = \frac{p_1 - p_2}{\gamma_w}$

Manometer: $p_1 + \gamma_w(X) + \gamma_w(6.4\text{ in}) - \gamma_{CT}(6.4\text{ in}) - \gamma_w(X) = p_2$

$$\frac{p_1 - p_2}{\gamma_w} = \frac{\gamma_{CT}(6.4\text{ in}) - \gamma_w(6.4\text{ in})}{\gamma_w} = \frac{1.60\gamma_w(6.4\text{ in}) - \gamma_w(6.4\text{ in})}{\gamma_w} = \frac{3.84\text{ in}}{12\text{ in/ft}}$$
$$= 0.32\text{ ft} = h_L$$

$$h_L = K\frac{\upsilon_2^2}{2g}: K = \frac{2gh_L}{\upsilon_2^2} = \frac{2(32.2\text{ ft/s}^2)(0.32\text{ ft})}{(1.95\text{ ft/s})^2} = \mathbf{5.43} = K$$

$$\upsilon_2 = \frac{Q}{A_2} = \frac{0.10\text{ ft}^3/\text{s}}{0.05132\text{ ft}^2} = 1.95\text{ ft/s}$$

7.7 $\frac{p_1}{\gamma_o} + z_1 + \frac{\upsilon_1^2}{2g} - h_L = \frac{p_2}{\gamma_o} + z_2 + \frac{\upsilon_2^2}{2g}$: $\upsilon_1 = \upsilon_2$: $h_L = \frac{p_1 - p_2}{\gamma_o} + (z_1 - z_2)$

Manometer: $p_1 + \gamma_o(X) + \gamma_o(0.38\text{ m}) - \gamma_m(0.38\text{ m}) - \gamma_o(X) - \gamma_o(1.0\text{ m}) = p_2$

$$\frac{p_1 - p_2}{\gamma_o} = \frac{\gamma_m(0.38\text{ m})}{\gamma_o} + \frac{\gamma_o(0.62\text{ m})}{\gamma_o} = \frac{13.54\gamma_w(0.38\text{ m})}{0.90\gamma_w} + 0.62\text{ m} = 6.337\text{ m}$$

$$h_L = 6.337\text{ m} + (-1.0\text{ m}) = 5.337\text{ m} = K\left(\frac{\upsilon_2^2}{2g}\right)$$

$$K = \frac{2gh_L}{\upsilon_2^2} = \frac{2(9.81\text{ m/s}^2)(6.337\text{ m})}{(1.20\text{ m/s})^2} = \mathbf{72.7}$$

7.8 $\frac{p_1}{\gamma_w} + z_1 + \frac{\upsilon_1^2}{2g} + h_A - h_L = \frac{p_2}{\gamma_w} + z_2 + \frac{\upsilon_2^2}{2g}$ Ref. pts. at tank surfaces. Assume $h_L = 0$.

$p_1 = 0$, $z_1 = z_2$, and $\upsilon_1 = \upsilon_2 = 0$

$$h_A = \frac{p_2}{\gamma_w} = \frac{500\text{ kN}}{\text{m}^2}\frac{\text{m}^3}{9.81\text{ kN}} = 50.97\text{ m}$$

$$Q = \frac{2250\text{ L/min}(1\text{ m}^3/\text{s})}{60000\text{ L/min}} = 0.0375\text{ m}^3/\text{s}$$

$P_A = h_A\gamma_w Q = 50.97\text{ m}(9.81\text{ kN/m}^3)(0.0375\text{ m}^3/\text{s}) = 18.75\text{ kN·m/s} = \mathbf{18.75\text{ kW}}$

7.9 $h_A = \frac{p_2 - p_1}{\gamma_w} = \frac{(500 - 68)\text{kN}}{\text{m}^2 9.81\text{ kN/m}^3} = 44.04\text{ m}$ (See Prob. 7.8, $p_1 = 68$ kPa)

$P_A = h_A\gamma_w Q = (44.04)(9.81)(0.0375) = \mathbf{16.20\text{ kW}}$

7.10 $\frac{p_1}{\gamma_w}+z_1+\frac{\upsilon_1^2}{2g}+h_A-h_L=\frac{p_2}{\gamma_w}+z_2+\frac{\upsilon_2^2}{2g}$;

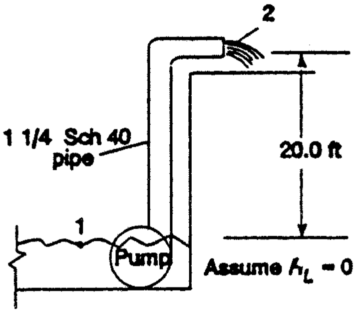

$p_1 = p_2 = 0;\ \upsilon_1 = 0$

$h_A = (z_2 - z_1) + \frac{\upsilon_2^2}{2g} = 20\text{ ft} + \frac{(10\text{ ft/s})^2}{2(32.2\text{ ft/s}^2)} = 21.55\text{ ft}$

$Q = \frac{2800\text{ gal/hr}}{60\text{ min/hr}} \times \frac{1\text{ ft}^3\text{/s}}{449\text{ gal/min}} = 0.1039\text{ ft}^3\text{/s}$

$\upsilon_2 = \frac{Q}{A_2} = \frac{0.1039\text{ ft}^3\text{/s}}{0.01039\text{ ft}^2} = 10.0\text{ ft/s}$

a) $P_A = h_A\gamma_w Q = (21.55\text{ ft})(62.4\text{ lb/ft}^3)(0.1039\text{ ft}^3\text{/s}) = 139.8\text{ lb·ft/s} \times \frac{1\text{ hp}}{550\text{ lb·ft/s}}$

$= \mathbf{0.254\ hp}$

b) $e_M = \frac{P_A}{P_I} = \frac{0.254\text{ hp}}{0.50\text{ hp}} = 0.508 = \mathbf{50.8\%}$

7.11 $\frac{p_1}{\gamma_w}+z_1+\frac{\upsilon_1^2}{2g}+h_A-h_L=\frac{p_2}{\gamma_w}+z_2+\frac{\upsilon_2^2}{2g}$ | Pt. 1 at well surface. $p_1 = 0$ and $\upsilon_1 = 0$; Pt. 2 at tank surface. $\upsilon_2 = 0$

$h_A = \frac{p_2}{\gamma_w} + (z_2 - z_1) + h_L = \frac{40\text{ lb ft}^3\ 144\text{ in}^2}{\text{in}^2\ 62.4\text{ lb ft}^2} + 120\text{ ft} + 10.5\text{ ft} = 222.8\text{ lb·ft/lb}$

$Q = \frac{745\text{ gal/h}}{60\text{ min/h}} \times \frac{1\text{ ft}^3\text{/s}}{449\text{ gal/min}} = 0.0277\text{ ft}^3\text{/s}$

a) $P_A = h_A\gamma_w Q = \frac{222.8\text{ lb·ft}}{\text{lb}} \times \frac{62.4\text{ lb}}{\text{ft}^3} \times \frac{0.0277\text{ ft}^3}{\text{s}} = \frac{348\text{ lb·ft}}{\text{lb}}\ \frac{1\text{ hp}}{550\text{ lb·ft/lb}}$

$= \mathbf{0.700\ hp}$

b) $e_M = \frac{P_A}{P_I} = \frac{0.700\text{ hp}}{1.0\text{ hp}} = 0.700 = \mathbf{70.0\%}$

7.12 $\frac{p_1}{\gamma_w}+z_1+\frac{\upsilon_1^2}{2g}+h_A-h_L=\frac{p_2}{\gamma_w}+z_2+\frac{\upsilon_2^2}{2g}$: $\upsilon_1 = \upsilon_2$

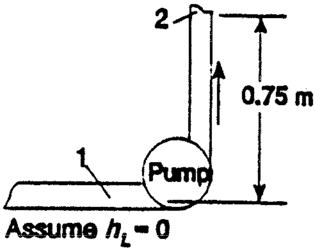

$h_A = \frac{p_2 - p_1}{\gamma_w} + (z_2 - z_1) = \frac{[520-(-30)]\text{kN}}{\text{m}^2 9.81\text{ kN/m}^3} + 0.75\text{ m}$

$= 56.82\text{ m}$

$Q = 75\text{ L/min} \times \frac{1\text{ m}^3\text{/s}}{60000\text{ L/min}} = 1.25 \times 10^{-3}\text{ m}^3\text{/s}$

$P_A = h_A\gamma_w Q = (56.82\text{ m})(9.81\text{ kN/m}^3)(1.25 \times 10^{-3}\text{ m}^3\text{/s}) = 0.697\text{ kN·m/s} = \mathbf{0.697\ kW}$

7.13 $\frac{p_A}{\gamma_o} + z_A + \frac{\upsilon_A^2}{2g} + h_A - h_L = \frac{p_B}{\gamma_o} + z_B + \frac{\upsilon_B^2}{2g}$

$h_A = \frac{p_B - p_A}{\gamma_o} + (z_B - z_A) + \frac{\upsilon_B^2 - \upsilon_A^2}{2g} + h_L$

$h_L = 2.5\left(\frac{\upsilon_B^2}{2g}\right)$

$Q = 75$ L/min $= 1.25 \times 10^{-3}$ m³/s (Prob. 7.12)

$\upsilon_A = \frac{Q}{A_A} = \frac{1.25\times10^{-3}}{2.168\times10^{-3}} = 0.577$ m/s

$\upsilon_B = \frac{Q}{A_B} = \frac{1.25\times10^{-3}}{5.574\times10^{-4}} = 2.243$ m/s

$$h_A = \frac{[275-(-20)]\text{kN}}{\text{m}^2(.85)(9.81\text{ kN/m}^3)} + 1.20\text{ m} + \frac{(2.243^2 - 0.577^2)\text{m}^2/\text{s}^2}{2(9.81\text{ m/s}^2)} + 2.5\frac{(2.243\text{ m/s})^2}{2(9.81\text{ m/s}^2)}$$

$h_A = 35.38$ m + 1.20 m + 0.24 m + 0.64 m = **37.46 m**

$P_A = h_A\gamma_o Q$ + (37.46 m)(0.85)(9.81 kN/m³)(1.25 × 10⁻³ m³/s) = 0.39 kN·m/s
= **0.390 kW**

7.14 a) $\frac{p_A}{\gamma_w} + z_A + \frac{\upsilon_A^2}{2g} - h_{L_S} = \frac{p_B}{\gamma_o} + z_B + \frac{\upsilon_B^2}{2g}$

Pt. A at lower tank surface. $p_A = 0$
Pt. B at pump inlet. $\upsilon_A = 0$
$\upsilon_B = \frac{Q}{A_B} = \frac{2.0\text{ ft}^3/\text{s}}{0.2006\text{ ft}^2} = 9.97$ ft/s

$p_B = \gamma_w\left[(z_A - z_B) - \frac{\upsilon_B^2}{2g} - h_L\right]$

$$p_B = \frac{62.4\text{ lb}}{\text{ft}^3}\left[-10\text{ ft} - \frac{(9.97\text{ ft/s})^2}{2(32.2\text{ ft/s}^2)} - 6\text{ ft}\right]\frac{1\text{ ft}^2}{144\text{ in}^2} = \mathbf{-7.60\ psig}$$

b) $\frac{p_C}{\gamma_w} + z_C + \frac{\upsilon_C^2}{2g} - h_{L_D} = \frac{p_D}{\gamma_w} + z_D + \frac{\upsilon_D^2}{2g}$

Pt. C at pump outlet. $p_D = 0$
Pt. D at upper tank surface. $\upsilon_D = 0$
$\upsilon_C = \upsilon_B = 9.97$ ft/s

$p_C = \gamma_w\left[(z_D - z_C) - \frac{\upsilon_C^2}{2g} + h_{L_D}\right]$ $\quad p_D = 0$

$\upsilon_D = 0$

$$p_C = \frac{62.4\text{ lb}}{\text{ft}^3}[40\text{ ft} - 1.54\text{ ft} + 12\text{ ft}]\frac{1\text{ ft}^2}{144\text{ in}^2} = \mathbf{21.9\ psig}$$

c) $\frac{p_A}{\gamma_w} + z_A + \frac{\upsilon_A^2}{2g} + h_A - h_{L_S} - h_{L_D} = \frac{p_D}{\gamma} + z_D + \frac{\upsilon_D^2}{2g}$: $p_A = p_D = 0$; $\upsilon_A = \upsilon_D = 0$

$h_A = z_D - z_A + h_{L_S} + h_{L_D}$ = 50 ft + 6 ft + 12 ft = **68.0 ft**

d) $P_A = h_A\gamma_w Q$ = (68.0 ft)(62.4 lb/ft³)(2.0 ft³/s) = $\frac{8486\text{ lb}\cdot\text{ft}}{\text{lb}}\ \frac{\text{hp}}{550\text{ lb}\cdot\text{ft/lb}}$ = **15.4 hp**

7.15 (See Prob. 7.14)

a) $p_B = \gamma_w\left[(z_A - z_B) - \frac{\upsilon_B^2}{2g} - h_L\right] = \frac{62.4\text{ lb}}{\text{ft}^3}[+10\text{ ft} - 1.54\text{ ft} - 6\text{ ft}]\frac{1\text{ ft}^2}{144\text{ in}^2}$

b) p_C = **21.8 psig** (same as Prob. 7.14)

c) $h_A = (z_D - z_A) + h_{L_S} + h_{L_D} = 30\text{ ft} + 6\text{ ft} + 12\text{ ft} = \mathbf{48\ ft}$

d) $P_A = h_A\gamma_w Q = (48\text{ ft})(62.4\text{ lb/ft}^3)(20.0\text{ ft}^3\text{/s})/550 = \mathbf{10.9\ hp}$

7.16 a) $$\frac{p_1}{\gamma_o} + z_1 + \frac{\upsilon_1^2}{2g} + h_A - h_L = \frac{p_2}{\gamma_o} + z_2 + \frac{\upsilon_2^2}{2g}$$ Pt. 1 at lower tank surface. $p_1 = 0$; Pt. 2 at upper tank surface. $\upsilon_1 = \upsilon_2 = 0$

$$h_A = \frac{p_2}{\gamma_o} + (z_2 - z_1) + h_L = \frac{825\text{ kN m}^3}{\text{m}^2(0.85)(9.81\text{ kN})} + 14.5\text{ m} + 4.2\text{ m} = 117.6\text{ m}$$

$$P_A = h_A\gamma_o Q = (117.6\text{ m})(0.85)\left(\frac{9.81\text{ kN}}{\text{m}^3}\right)\frac{840\text{ L/min}(1\text{ m}^3\text{/s})}{60000\text{ L/min}} = \frac{13.73\text{ kN}\cdot\text{m}}{\text{s}}$$

$$= \mathbf{13.73\ kW}$$

b) $$\frac{p_1}{\gamma_o} + z_1 + \frac{\upsilon_1^2}{2g} - h_{L_S} = \frac{p_3}{\gamma_o} + z_3 + \frac{\upsilon_3^2}{2g}$$ Pt. 3 at pump inlet.

$$p_3 = \gamma_o\left[(z_1 - z_3) - \frac{\upsilon_3^2}{2g} - h_{L_S}\right]$$

$$= \frac{(0.85)(9.81\text{ kN})}{\text{m}^3}\left[-3.0\text{ m} - \frac{(4.53\text{ m/s})^2}{2(9.81\text{ m/s}^2)} - \frac{1.4\text{ N}\cdot\text{m}}{\text{N}}\right] = \mathbf{-45.4\ kPa}$$

$$\upsilon_3 = \frac{Q}{A_3} = \frac{840\text{ L/min}(1\text{ m}^3\text{/s})}{60000\text{ L/min}}\cdot\frac{1}{3.090\times10^{-3}\text{ m}^2} = 4.53\text{ m/s}$$

7.17 $$\frac{p_1}{\gamma_f} + z_1 + \frac{\upsilon_1^2}{2g} + h_A - h_L = \frac{p_2}{\gamma_f} + z_2 + \frac{\upsilon_2^2}{2g}$$ Pt. 1 at lower pump surface. $p_1 = 0$; Pt. 2 outside pipe at cutter. $\upsilon_1 = 0$; $p_2 = 0$

$$h_A = (z_2 - z_1) + \frac{\upsilon_2^2}{2g} + h_L = 1.25\text{ m} + \frac{(2.91\text{ m/s})^2}{2(9.81\text{ m/s}^2)} + 3.0\text{ m} = \mathbf{4.68\ m}$$

$$\upsilon_2 = \frac{Q}{A_2} = \frac{60\text{ L/min}(1\text{ m}^3\text{/s})}{60000\text{ L/min}}\times\frac{1}{3.437\times10^{-4}\text{ m}^2} = 2.91\text{ m/s}$$

$$P_A = h_A\gamma_f Q = (4.68\text{ m})(0.95)\left(\frac{9.81\text{ kN}}{\text{m}^3}\right)\left(\frac{60\text{ m}^3}{60000\text{ s}}\right)$$

$$= \frac{0.0436\text{ kN}\cdot\text{m}}{\text{s}}\times\frac{10^3\text{ N}}{\text{kN}} = \frac{43.6\text{ N}\cdot\text{m}}{\text{s}} = 43.6\text{ W}$$

7.18 Tub Volume = $(\pi D^2/4)(d) = [\pi(0.525\text{ m})^2/4](0.25\text{ m}) = 0.0541\text{ m}^3$

$Q = V/t = 0.0541\text{ m}^3/90\text{ s} = 6.013\times10^{-4}\text{ m}^3\text{/s}$

Outlet $$\upsilon_2 = \frac{Q}{A_2} = \frac{6.013\times10^{-4}\text{ m}^3\text{/s}}{\pi(.018\text{ m})^2/4} = 2.36\text{ m/s}$$

Pt. 1 at tub surface.
Pt. 2 in outlet stream.
$p_1 = p_2 = 0$; $\upsilon_1 = 0$

$$\frac{p_1}{\gamma_w} + z_1 + \frac{\upsilon_1^2}{2g} + h_A - h_L = \frac{p_2}{\gamma} + z_2 + \frac{\upsilon_2^2}{2g}$$

$$h_A = (z_2 - z_1) + \frac{\upsilon_2^2}{2g} + h_L = (1.00 - 0.375)\text{m} + \frac{(2.36\text{ m/s})^2}{2(9.81\text{ m/s}^2)} + 0.22\text{ m} = \mathbf{1.13\ m}$$

7.19 Weight Flow Rate = $W = w/t$ = 556 lb/10 s = 55.6 lb/s

$$Q = \frac{W}{\gamma_w} = \frac{55.6\ \text{lb/s}}{62.4\ \text{lb/ft}^3} = 0.891\ \text{ft}^3\text{/s:}\quad \upsilon_A = \frac{Q}{A_A} = \frac{0.891\ \text{ft}^3\text{/s}}{\pi(4/12)^2/4\ \text{ft}^2} = 10.21\ \text{ft/s}$$

$$\upsilon_B = \upsilon_A\left(\frac{D_A}{D_B}\right)^2 = 10.21\ \text{ft/s}\left(\frac{4}{3}\right)^2 = 18.15\ \text{ft/s at outlet of upper pipe (Pt. B)}$$

$$\frac{p_A}{\gamma_w} + z_A + \frac{\upsilon_A^2}{2g} + h_A - h_L = \frac{p_B}{\gamma_w} + z_B + \frac{\upsilon_B^2}{2g};\ h_L = 0 \text{ and } p_B = 0$$

$$h_A = (z_B - z_A) + \frac{\upsilon_B^2 - \upsilon_A^2}{2g} - \frac{p_A}{\gamma_w} = 20\ \text{ft} + \frac{(18.15^2 - 10.21^2)\text{ft}^2\text{/s}^2}{2(32.2\ \text{ft/s}^2)} - \frac{-2.0\ \text{lb ft}^3}{\text{in}^2(62.4\ \text{lb})}\ \frac{144\ \text{in}^2}{\text{ft}^2}$$

$$h_A = 20\ \text{ft} + 3.50\ \text{ft} + 4.62\ \text{ft} = 28.11\ \text{ft}$$

$$P_A = h_A W = 28.11\ \text{ft}(55.6\ \text{lb/s}) = \frac{1563\ \text{ft}\cdot\text{lb/s}(1\ \text{hp})}{550\ \text{ft}\cdot\text{lb/s}} = \mathbf{2.84\ hp}$$

7.20 $$Q = \frac{9.1\ \text{gal/min}(1\ \text{ft}^3\text{/s})}{449\ \text{gal/min}} = 0.0203\ \text{ft}^3\text{/s}$$

$$P_A = h_A\gamma_o Q = (257\ \text{ft})(0.90)(62.4\ \text{lb/ft}^3)(0.0203\ \text{ft}^3\text{/s}) = 292.5\ \text{ft·lb/s}/550 = 0.532\ \text{hp}$$

$$e_M = \frac{P_A}{P_I} = \frac{0.532\ \text{hp}}{0.850\ \text{hp}} = 0.626 = \mathbf{62.6\%}$$

7.21 $$Q = \frac{V}{t} = \frac{1.0\ \text{L}}{40\ \text{s}} \times \frac{1\ \text{m}^3}{10^3\ \text{L}} = 2.50 \times 10^{-5}\ \text{m}^3\text{/s}$$

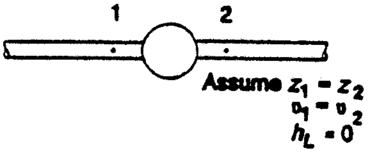

$$p_1 = \gamma_m h = \frac{133.4\ \text{kN}}{\text{m}^3} \times (-0.15\ \text{m}) = -20.0\ \text{kPa}$$

$$\frac{p_1}{\gamma_g} + z_1 + \frac{\upsilon_1^2}{2g} + h_A - h_L = \frac{p_2}{\gamma_g} + z_2 + \frac{\upsilon_2^2}{2g}$$

$$h_A = \frac{p_2 - p_1}{\gamma_g} = \frac{[30 - (-20)]\text{kN/m}^2}{6.67\ \text{kN/m}^3} = 7.50\ \text{m}$$

$$P_A = h_A\gamma_g Q = (7.50\ \text{m})(6.67\ \text{kN/m}^3)(2.50 \times 10^{-5}\ \text{m}^3\text{/s})(10^3\ \text{N/kN}) = 1.25\ \text{N·m/s}$$

$$P_I = \frac{P_A}{e_M} = \frac{1.25W}{0.60} = \mathbf{2.08}\boldsymbol{W}$$

7.22 a) $$Q = A_{cyl} \times \frac{\text{stroke}}{\text{time}} = \frac{\pi(5.0\ \text{in})^2(1\ \text{ft}^2)}{4(144\ \text{in}^2)} \times \frac{20\ \text{in}}{15\ \text{s}}\ \frac{\text{ft}}{12\ \text{in}} = \mathbf{0.01515\ ft^3/s}$$

b) $$p_{cyl} = \frac{F}{A_{cyl}} = \frac{11000\ \text{lb}}{\pi(5.0)^2/(4)\ \text{in}^2} = \mathbf{(560\ lb/in^2)}(144\ \text{in}^2\text{/ft}^2) = 80672\ \text{lb/ft}^2$$

c) $\frac{p_B}{\gamma_o} + z_B + \frac{\upsilon_B^2}{2g} - h_{L_D} = \frac{p_C}{\gamma_o} + z_C + \frac{\upsilon_C^2}{2g}$

Pt. A at tank surface.
Pt. B at pump outlet.
Pt. C in cylinder.

$$p_B = p_C + \gamma_o\left[(z_C - z_B) + \frac{\upsilon_C^2 - \upsilon_B^2}{2g} + h_{L_D}\right]$$

$$\upsilon_C = \frac{20\text{ in}}{15\text{ s}} \times \frac{\text{ft}}{12\text{ in}} = 0.1111\frac{\text{ft}}{\text{s}}:\ \upsilon_B = \frac{Q}{A_B} = \frac{0.01515\text{ ft}^3/\text{s}}{0.000976\text{ ft}^2} = 15.52\text{ ft/s}$$

$$p_B = 560\text{ psig} + 0.90\frac{(62.4\text{ lb})}{\text{ft}^3}\left[10\text{ ft} + \frac{(0.1111^2 - 15.52^2)}{2(32.2)} + 35.0\text{ ft}\right]\frac{1\text{ ft}^2}{144\text{ in}^2}$$

$= \mathbf{576.1\ psig}$

d) $\frac{p_A}{\gamma_o} + z_A + \frac{\upsilon_A^2}{2g} - h_{L_S} = \frac{p_D}{\gamma_o} + z_D + \frac{\upsilon_D^2}{2g}$; Pt. D at pump inlet. $p_A = 0, \upsilon_A = 0$

$$p_D = \gamma_o\left[z_A - z_D - \frac{\upsilon_D^2}{2g} - h_{L_S}\right]$$

$\upsilon_D = \upsilon_B = 15.52$ ft/s

$$p_D = \frac{(0.90)(62.4\text{ lb})}{\text{ft}^3}\left[-5.0\text{ ft} - \frac{(15.52\text{ ft/s})^2}{2(32.2\text{ ft/s}^2)} - 11.5\text{ ft}\right]\frac{1\text{ ft}^2}{144\text{ in}^2}$$

$p_D = -4.98$ psig

e) $\frac{p_A}{\gamma_o} + z_A + \frac{\upsilon_A^2}{2g} + h_A - h_{L_S} - h_{L_D} = \frac{p_C}{\gamma_o} + z_C + \frac{\upsilon_C^2}{2g}$: $p_A = 0$, $\upsilon_A = 0$

$$h_A = \frac{p_C}{\gamma_o} + (z_C - z_A) + \frac{\upsilon_C^2}{2g} + h_{L_S} + h_{L_D} = \frac{80672\text{ lb}\cdot\text{ft}^3}{\text{ft}^2(0.9)(62.4\text{ lb})} + 15\text{ ft} + \frac{(.1111)^2}{2g} + 11.5\text{ ft} + 35\text{ ft}$$

$h_A = 1498$ ft

$$P_A = h_A\gamma_o Q = (1498\text{ ft})(0.90)(62.4\text{ lb/ft}^2)(0.01515\text{ ft}^3/\text{s}) = \frac{1275\text{ ft}\cdot\text{lb/s}}{550} = \mathbf{2.32\ hp}$$

7.23 $\frac{p_A}{\gamma_o} + z_A + \frac{\upsilon_A^2}{2g} - h_R - h_L = \frac{p_B}{\gamma_o} + z_B + \frac{\upsilon_B^2}{2g}$

$$h_R = \frac{p_A - p_B}{\gamma_o} + (z_A - z_B) + \frac{\upsilon_A^2 - \upsilon_B^2}{2g}$$

$\upsilon_A = \upsilon_B \cdot \frac{A_B}{A_A} = 1.5\ \frac{1.772\times10^{-3}\text{m}^2}{3.835\times10^{-4}\text{m}^2}$

$\upsilon_A = 6.93$ m/s; assume $h_L = 0$

$$h_R = \frac{(6.8 - 3.4)(10^6)\text{N/m}^2}{0.90(9810\text{ N/m}^3)} + 3.0\text{ m} + \frac{(6.93^2 - 1.50^2)\text{m}^2/\text{s}^2}{2(9.81\text{ m/s}^2)} = 390\text{ m}$$

$P_R = h_R\gamma_o Q = h_R\gamma_o A_B\upsilon_B = (390\text{ m})(0.90)(9.81\text{ kN/m}^3)(1.772\times10^{-3}\text{ m}^2)(1.5\text{ m/s})$

$= \mathbf{9.15\ kW}$

7.24 $$\frac{p_A}{\gamma_w}+z_A+\frac{\upsilon_A^2}{2g}-h_R-h_L=\frac{p_B}{\gamma_w}+z_B+\frac{\upsilon_B^2}{2g}$$

$$h_R=\frac{p_A-p_B}{\gamma_w}+(z_A-z_B)+\frac{\upsilon_A^2-\upsilon_B^2}{2g}-h_L$$

$$Q=\frac{3400\text{ gal/min}(1\text{ ft}^3/\text{s})}{449\text{ gal/min}}=7.57\text{ ft}^3/\text{s}$$

$$\upsilon_A=\frac{Q}{A_A}=\frac{7.57\text{ ft}^3/\text{s}}{0.7771\text{ ft}^2}=9.74\text{ ft/s}$$

$$\upsilon_B=\frac{Q}{A_B}=\frac{7.57}{2.792}=2.71\text{ ft/s}$$

$$h_L=2.0\frac{\upsilon_A^2}{2g}=\frac{2.0(9.74)^2}{2(32.2)}=2.95\text{ ft}$$

$$h_R=\frac{[21.4-(-5)]\text{lb}\cdot\text{ft}^3(144\text{ in}^2)}{\text{in}^2(62.4\text{ lb})1\text{ ft}^2}+3\text{ ft}+\frac{(9.74^2-2.74^2)}{2(32.2)}\text{ ft}-2.95\text{ ft}=62.3\text{ ft}$$

$$P_R=h_R\gamma_wQ=(62.3\text{ ft})(62.4\text{ lb/ft}^3)(7.57\text{ ft}^3/\text{s})=\frac{29454\text{ ft}\cdot\text{lb/s}}{(550\text{ ft}\cdot\text{lb/s})/\text{hp}}=\mathbf{53.6\ hp}$$

7.25 $$\frac{p_1}{\gamma_o}+z_1+\frac{\upsilon_1^2}{2g}-h_R-h_L=\frac{p_2}{\gamma_o}+z_2+\frac{\upsilon_2^2}{2g}$$

Pt. 1 at oil surface. $p_1=0$ and $\upsilon_1=0$
Pt. 2 in outlet stream. $p_2=0$

$$h_R=(z_1-z_2)-\frac{\upsilon_2^2}{2g}-h_L=10\text{ m}-0.638\text{ m}-1.40\text{ m}=7.96\text{ m}$$

$$\upsilon_2=\frac{Q}{A_2}=\frac{0.25\text{ m}^3/\text{s}}{\pi(0.30\text{ m})^2/4}=3.54\text{ m/s:}\quad\frac{\upsilon_2^2}{2g}=\frac{3.54^2\text{ m}^2/\text{s}^2}{2(9.81)\text{ m/s}^2}=0.638\text{ m}$$

$P_R=h_R\gamma_oQ=(7.96\text{ m})(0.86)(9.81\text{ kN/m}^3)(0.25\text{ m}^3/3)=16.79\text{ kN}\cdot\text{m/s}=$ **16.79 kW**

$P_o=P_R\cdot e_M=16.79\text{ kW}\times 0.75=$ **12.60 kW**

7.26 $$\frac{p_1}{\gamma_f}+z_1+\frac{\upsilon_1^2}{2g}-h_A-h_L=\frac{p_2}{\gamma_f}+z_2+\frac{\upsilon_2^2}{2g}$$

$$h_A=\frac{p_2-p_1}{\gamma_f}+(z_2-z_1)+\frac{\upsilon_2^2-\upsilon_1^2}{2g}+h_L$$

$$Q=40\text{ gal/min}/449=0.0891\text{ ft}^3/\text{s}$$

$$\upsilon_1=\frac{Q}{A_1}=\frac{0.0891\text{ ft}^3/\text{s}}{0.05132\text{ ft}^2}=1.74\text{ ft/s}$$

$$\upsilon_2=\frac{Q}{A_2}=\frac{0.0891}{0.02333}=3.82\text{ ft/s}$$

$$h_A=\frac{[50.0-(-2.30)]\text{lb}\cdot\text{ft}^3\ 144\text{ in}^2}{\text{in}^2(60.0\text{ lb})\text{ ft}^2}+25\text{ ft}+\frac{(3.82^2-1.74^2)\text{ft}^2}{2(32.2\text{ ft/s}^2)\text{s}^2}+3.4\text{ ft}=154.1\text{ ft}$$

$P_A=h_A\gamma_fQ=(154.1\text{ ft})(60.0\text{ lb/ft}^3)(0.0891\text{ ft}^3/\text{s})(1\text{ hp}/550\text{ lb}\cdot\text{ft/s})=$ **1.50 hp**

7.27 $P_I=P_A/e_M=1.50\text{ hp}/0.75=$ **2.00 hp**

7.28 $$\frac{p_1}{\gamma}+z_1+\frac{\upsilon_1^2}{2g}-h_L=\frac{p_2}{\gamma}+z_2+\frac{\upsilon_2^2}{2g}$$

Pt. 1 at water surface. $p_1=0,\upsilon_1=0$
Pt. 2 in outlet stream. $p_2=0$

$h_L=(z_1-z_2)-\dfrac{\upsilon_2^2}{2g}=4.0\text{ m}-(5.14\text{ m/s})^2/2(9.81\text{ m/s}^2)=$ **2.65 m**

$$\upsilon_2=\frac{Q}{A_2}=\frac{600\text{ L/min}(1\text{ m}^3/\text{s})}{60000\text{ L/min}\ 1.945\times10^{-3}\text{ m}^2}=5.14\text{ m/s}$$

7.29 $\frac{p_1}{\gamma_K} + z_1 + \frac{\upsilon_1^2}{2g} - h_L = \frac{p_B}{\gamma_K} + z_B + \frac{\upsilon_B^2}{2g}$

Pt. 1 at tank surface. $p_1 = 0, \upsilon_1 = 0$

$\upsilon_B = \frac{Q}{A_B} = \frac{0.060\text{ m}^3/\text{s}}{4.768 \times 10^{-3}\text{ m}^2} = 12.58\text{ m/s}$

$p_B = \gamma_K \left[(z_1 - z_B) - \frac{\upsilon_B^2}{2g} - h_L \right]$

$p_B = (0.823)(9.81\text{ kN/m}^3)\left[17.0\text{ m} - \frac{(12.58\text{ m/s})^2}{2(9.81\text{ m/s}^2)} - 4.60\text{ m} \right] = 35.0\text{ kN/m}^2 = \mathbf{35.0\ kPa}$

7.30 $\frac{p_1}{\gamma_w} + z_1 + \frac{\upsilon_1^2}{2g} - h_R - h_L = \frac{p_2}{\gamma_w} + z_2 + \frac{\upsilon_2^2}{2g}$

Pt. 1 at reservoir surface. $p_1 = 0, \upsilon_1 = 0$
Pt. 2 in outlet stream. $p_2 = 0$

$h_L = (z_1 - z_2) - \frac{\upsilon_2^2}{2g} - h_R$

$\upsilon_2 = \frac{Q}{A_2} = \frac{1000\text{ gal/min}}{0.3472\text{ ft}^2} \times \frac{1\text{ ft}^3/\text{s}}{449\text{ gal/min}} = 6.41\text{ ft/s}$

$h_L = 165\text{ ft} - \frac{(6.41\text{ ft/s})^2}{2(32.2\text{ ft/s}^2)} - 146.4\text{ ft} = 17.9\text{ ft} = \mathbf{17.9\ ft{\cdot}lb/lb}$

$h_R = \frac{P_R}{\gamma_w Q} = \frac{37.0\text{ hp}(550\text{ ft}\cdot\text{lb/s})}{1\text{ hp}(62.4\text{ lb/ft}^3)(2.227\text{ ft}^3/\text{s})} = 146.4\text{ ft}$

7.31 $\frac{p_1}{\gamma_w} + z_1 + \frac{\upsilon_1^2}{2g} - h_{L_S} = \frac{p_A}{\gamma_w} + z_A + \frac{\upsilon_A^2}{2g}$ Pt. 1 at reservoir surface. $p_1 = 0, \upsilon_1 = 0$

$h = (z_1 - z_A) = \frac{p_A}{\gamma_w} + \frac{\upsilon_A^2}{2g} + h_L$

$Q = 1500\text{ gal/min} \times 1\text{ ft}^3/\text{s}/449\text{ gal/min} = 3.341\text{ ft}^3/\text{s}$

$\upsilon_A = \frac{Q}{A_A} = \frac{3.341\text{ ft}^3/\text{s}}{0.5479\text{ ft}^2} = 6.10\text{ ft/s}$

$h = \frac{5.0\text{ lb}(\text{ft}^3)(144\text{ in}^2)}{\text{in}^2(62.4\text{ lb})(\text{ft}^2)} + \frac{(6.10\text{ ft/s})^2}{2(32.2\text{ ft/s}^2)} + 0.65\text{ ft} = \mathbf{12.8\ ft}$

7.32 $\frac{p_A}{\gamma_w} + z_A + \frac{\upsilon_A^2}{2g} + h_A - h_{L_D} = \frac{p_B}{\gamma_w} + z_B + \frac{\upsilon_B^2}{2g}$

$\upsilon_B = \frac{Q}{A_B} = \frac{3.341\text{ ft}^3/\text{s}}{0.3472\text{ ft}^2} = 9.62\text{ ft/s}$

$h_A = \frac{p_B - p_A}{\gamma_w} + (z_B - z_A) + \frac{\upsilon_B^2 - \upsilon_A^2}{2g} + h_{L_D} = \frac{(85-5)\text{ lb}(\text{ft}^3)144\text{ in}^2}{\text{in}^2(62.4\text{ lb})\text{ft}^2} + 25\text{ ft}$

$+ \frac{(9.62^2 - 6.10^2)\text{ft}^2/\text{s}^2}{2(32.2\text{ ft/s}^2)} + 28\text{ ft} = 238.5\text{ ft}$

$P_A = h_A \gamma_w Q = (238.5\text{ ft})(62.4\text{ lb/ft}^3)(3.341\text{ ft}^3/\text{s})/550 = \mathbf{90.4\ hp}$

7.33 $\frac{p_1}{\gamma_K}+z_1+\frac{\upsilon_1^2}{2g}-h_L=\frac{p_2}{\gamma_K}+z_2+\frac{\upsilon_2^2}{2g}$ | Pt. 1 at tank surface. $\upsilon_1 = 0$; Pt. 2 in outlet stream. $p_2 = 0$

$$h_L=\frac{p_1}{\gamma_K}+(z_1-z_2)-\frac{\upsilon_2^2}{2g}=\frac{103.4\text{ kN/m}^2}{8.07\text{ kN/m}^3}-5.0\text{ m}-\frac{(4.28\text{ m/s})^2}{2(9.81\text{ m/s}^2)}=\mathbf{6.88\text{ m}}$$

$$\frac{(4.28\text{ m/s})^2}{2(9.81\text{ m/s}^2)}=0.936\text{ m}$$

$$\upsilon_2=\frac{Q}{A_2}=\frac{500\text{ L/min}}{1.945\times10^{-3}\text{m}^2}\times\frac{1\text{ m}^3\text{/s}}{60000\text{ L/min}}=4.28\text{ m/s}$$

$p_1 = 15.0$ psi × 6895 Pa/psi = 1.034×10^5 N/m² × 1 kN/10^3 N = **103.4 kN/m²**

7.34 (See Prob. 7.33) $\upsilon_2 = 2(4.28\text{ m/s}) = 8.56$ m/s

$$\frac{\upsilon_2^2}{2g}=\frac{(8.56\text{ m/s})^2}{2(9.81\text{ m/s}^2)}=3.74\text{ m: Then } h_L=6.88\text{ m}\times\frac{3.74\text{ m}}{0.936\text{ m}}=27.52\text{ m}$$

$$p_1=\gamma_K\left[(z_2-z_1)+\frac{\upsilon_2^2}{2g}+h_L\right]=\frac{8.07\text{ kN}}{\text{m}^3}[5.0+3.74+27.52]\text{m}=292.6\text{ kPa}$$

$p_1 = 292.6$ kPa × 1.0 psi/6.895 kPa = **42.4 psig**

General data for Problems 7.35 through 7.40:

$\gamma_o = sg_o\gamma_w = 0.93(62.4\text{ lb/ft}^3) = 58.03\text{ lb/ft}^3$

$Q = 175$ gal/min × 1 ft³/s/449 gal/min = 0.390 ft³/s

$P_A = P_{in} \times e_M = 28.4$ hp(0.80) = 22.7 hp × 550 ft·lb/s/hp = 12496 ft·lb/s

7.35 $\frac{p_1}{\gamma}+z_1+\frac{\upsilon_1^2}{2g}-h_{L_{1-6}}+h_A-h_R=\frac{p_6}{\gamma}+z_6+\frac{\upsilon_6^2}{2g}$: $p_1 = p_6 = 0$, $\upsilon_1 = 0$

$$h_R=(z_1-z_6)-\frac{\upsilon_6^2}{2g}-h_{L_{1-6}}+h_A$$

$z_1 - z_6 = -1.0$ ft

$$\upsilon_6=\frac{Q}{A_6}=\frac{0.390\text{ ft}^3\text{/s}}{0.03326\text{ ft}^2}=11.72\text{ ft/s}=\upsilon_3=\upsilon_4=\upsilon_5$$

$$\frac{\upsilon_6^2}{2g}=\frac{(11.72)^2}{2(32.2)}=2.13\text{ ft}$$

$h_{L_{1-6}} = 2.80 + 28.50 + 3.50 = 34.8$ ft

$$P_A=h_A\gamma Q:\ h_A=\frac{P_A}{\gamma Q}=\frac{12496\text{ ft}\cdot\text{lb/s}}{(58.03\text{ lb/ft}^3)(0.390\text{ ft}^3\text{/s})}=552.5\text{ ft}$$

$h_R = -1.0 - 2.13 - 34.8 + 552.5 = 514.5$ ft

$$P_R=h_R\gamma Q=\frac{(514.5\text{ ft})(58.03\text{ lb/ft}^3)(0.390\text{ ft}^3\text{/s})}{550\text{ ft}\cdot\text{lb/s/hp}}=\mathbf{21.16\text{ hp}}$$

7.36 $\frac{p_1}{\gamma} + z_1 + \frac{\upsilon_1^2}{2g} - h_{L_{1-2}} = \frac{p_2}{\gamma} + z_2 + \frac{\upsilon_2^2}{2g}$: $p_1 = 0$, $\upsilon_1 = 0$

$$p_2 = \gamma\left[(z_1 - z_2) - \frac{\upsilon_2^2}{2g} - h_{L_{1-2}}\right]$$

$$\upsilon_2 = \frac{Q}{A_2} = \frac{0.390\ \text{ft}^3/\text{s}}{0.05132\ \text{ft}^2} = 7.59\ \text{ft/s}$$

$$\frac{\upsilon_2^2}{2g} = \frac{(7.59)^2}{2(32.2)} = 0.896\ \text{ft}$$

$$p_2 = 58.03\frac{\text{lb}}{\text{ft}^3}[-4.0\ \text{ft} - 0.896\ \text{ft} - 2.80\ \text{ft}]\frac{1\ \text{ft}^2}{144\ \text{in}^2} = \mathbf{-3.10\ psig}$$

7.37 $\frac{p_1}{\gamma} + z_1 + \frac{\upsilon_1^2}{2g} - h_{L_{1-2}} + h_A = \frac{p_3}{\gamma} + z_3 + \frac{\upsilon_3^2}{2g}$: $p_1 = 0$, $\upsilon_1 = 0$

$$p_3 = \gamma\left[(z_1 - z_3) - \frac{\upsilon_3^2}{2g} - h_{L_{1-2}} + h_A\right] = 58.03\frac{\text{lb}}{\text{ft}^3}[-4.0 - 2.13 - 2.80 + 552.5]\frac{\text{ft}\cdot\text{ft}^2}{144\ \text{in}^2}$$

$\mathbf{p_3 = 219.1\ psig}$

7.38 $\frac{p_3}{\gamma} + z_3 + \frac{\upsilon_3^2}{2g} - h_{L_{3-4}} = \frac{p_4}{\gamma} + z_4 + \frac{\upsilon_4^2}{2g}$: $\upsilon_3 = \upsilon_4$, $z_3 = z_4$

$$p_4 = p_3 - \gamma h_{L_{3-4}} = 219.1\ \text{psig} - 58.03\ \frac{\text{lb}}{\text{ft}^3}\ (28.5\ \text{ft})\ \frac{1\ \text{ft}^2}{144\ \text{in}^2} = 207.6\ \text{psig}$$

7.39 $\frac{p_5}{\gamma} + z_5 + \frac{\upsilon_5^2}{2g} - h_{L_{5-6}} = \frac{p_6}{\gamma} + z_6 + \frac{\upsilon_6^2}{2g}$: $\upsilon_5 = \upsilon_6, p_6 = 0$

$$p_5 = \gamma\left[(z_6 - z_5) + h_{L_{5-6}}\right] = 58.03\frac{\text{lb}}{\text{ft}^3}[-1.0\ \text{ft} + 3.50\ \text{ft}]\frac{1\ \text{ft}^2}{144\ \text{in}^2} = 1.01\ \text{psig}$$

7.40 For $Q = 175$ gal/min, Fig. 6.2 suggests using either a 2 ½-in or 3-in Schedule 40 steel pipe for the suction line. The given 3-in pipe is satisfactory. However, noting that the pressure at the inlet to the pump is –3.10 psig, a larger pipe may be warranted to decrease the energy losses in the suction line and increase the pump inlet pressure. See Chapters 9–13, especially Section 13.12 on net positive suction head (NPSH).

Fig. 6.2 suggests either a 2-in or 2 ½-in pipe for the discharge line. The given 2 ½-in pipe size is satisfactory.

7.41 $\frac{p_1}{\gamma} + z_1 + \frac{\upsilon_1^2}{2g} - h_L = \frac{p_2}{\gamma} + z_2 + \frac{\upsilon_2^2}{2g}$: $p_2 = 0$

$$p_1 = \gamma\left[(z_2 - z_1) - \frac{\upsilon_2^2 - \upsilon_1^2}{2g} + h_L\right]$$

$\gamma = 0.76(62.4 \text{ lb/ft}^3) = 47.42 \text{ lb/ft}^3$

$z_2 - z_1 = -22 \text{ in}(1 \text{ ft}/12 \text{ in}) = -1.833 \text{ ft}$

$$Q = \frac{40 \text{ gal}}{8 \text{ s}} \times \frac{\text{ft}^3}{7.48 \text{ gal}} = 0.668 \text{ ft}^3/\text{s}$$

$$\upsilon_2 = \frac{Q}{A_2} = \frac{0.668 \text{ ft}^3/\text{s}}{\pi(2.0 \text{ in})^2/4} \times \frac{144 \text{ in}^2}{\text{ft}^2} = 30.64 \text{ ft/s}$$

$$\upsilon_1 = \frac{Q}{A_1} = \frac{0.668 \text{ ft}^3/\text{s}}{\pi(18.0 \text{ in})^2/4} \times \frac{144 \text{ in}^2}{\text{ft}^2} = 0.378 \text{ ft/s}$$

$$p_1 = 47.42 \frac{\text{lb}}{\text{ft}^3}\left[-1.833 \text{ ft} + \frac{(30.64^2 - 0.378^2)\text{ft}^2/\text{s}^2}{2(32.2 \text{ ft/s}^2)} + 4.75 \text{ ft}\right]\frac{1 \text{ ft}^2}{144 \text{ in}^2}$$

$\boldsymbol{p_1} = \textbf{5.76 psig}$

7.42 $\frac{p_1}{\gamma} + z_1 + \frac{\upsilon_1^2}{2g} - h_L + h_A = \frac{p_2}{\gamma} + z_2 + \frac{\upsilon_2^2}{2g}$ Pt. 1 at creek surface. $p_1 = 0, \upsilon_1 = 0$ Pt. 2 at tank surface. $\upsilon_2 = 0$

$$h_A = \frac{p_2}{\gamma} + (z_2 - z_1) + h_L = \frac{30 \text{ lb}}{\text{in}^2}\frac{\text{ft}^3}{62.4 \text{ lb}}\frac{144 \text{ in}^2}{\text{ft}^2} + 220 \text{ ft} + 15.5 \text{ ft} = 304.7 \text{ ft}$$

$$P_A = h_A\gamma Q = 304.7 \text{ ft} \times \frac{62.4 \text{ lb}}{\text{ft}^3} \times \frac{40 \text{ gal/min}}{449 \text{ gal/min}}\frac{(1 \text{ ft}^3/\text{s})\text{hp}}{550 \text{ ft}\cdot\text{lb/s}} = \mathbf{3.08 \text{ hp}}$$

7.43 $P_I = \frac{P_A}{e_M} = \frac{3.08 \text{ hp}}{0.72} = \mathbf{4.28 \text{ hp}}$

7.44 $\frac{p_1}{\gamma_o} + z_1 + \frac{\upsilon_1^2}{2g} - h_R = \frac{p_2}{\gamma} + z_2 + \frac{\upsilon_2^2}{2g}$: $z_1 = z_2$

$$h_R = \frac{p_1 - p_2}{\gamma_o} + \frac{\upsilon_1^2 - \upsilon_2^2}{2g}$$

Manometer: $p_1 + \gamma_o y + \gamma_o(38.5 \text{ in}) - \gamma_m(38.5 \text{ in}) - \gamma_o y = p_2$

$$p_1 - p_2 = \gamma_m(38.5 \text{ in}) - \gamma_o(38.5 \text{ in})$$

$$\frac{p_1 - p_2}{\gamma_o} = \frac{\gamma_m}{\gamma_o}(38.5 \text{ in}) - 38.5 \text{ in} = \frac{13.54\gamma_w}{0.9\gamma_w}(38.5 \text{ in}) - 38.5 \text{ in}$$

$$\frac{p_1 - p_2}{\gamma_o} = 540.7 \text{ in} \times \frac{1 \text{ ft}}{12 \text{ in}} = 45.06 \text{ ft}$$

$$\upsilon_1 = \frac{Q}{A_1} = \frac{135 \text{ gal/min}}{0.01227 \text{ ft}^2} \times \frac{1 \text{ ft}^3\text{/s}}{449 \text{ gal/min}} = \frac{0.3007 \text{ ft}^3\text{/s}}{0.01227 \text{ ft}^2} = 24.50 \text{ ft/s}$$

$$\upsilon_2 = \frac{Q}{A_2} = \frac{0.3007 \text{ ft}^3\text{/s}}{0.02944 \text{ ft}^2} = 10.21 \text{ ft/s}$$

$$h_R = 45.06 \text{ ft} + \frac{(24.5^2 - 10.21^2)\text{ft}^2\text{/s}^2}{2(32.2 \text{ ft/s}^2)} = 52.76 \text{ ft}$$

$$P_R = h_R\gamma Q = (52.76 \text{ ft})(0.90)(62.4 \text{ lb/ft}^3)(0.3007 \text{ ft}^3\text{/s}) = 891.0 \text{ ft·lb/s}$$

$$P_R = 891.0 \text{ ft·lb/s} \times \frac{1 \text{ hp}}{550 \text{ ft·lb/s}} = \mathbf{1.62\ hp}$$

7.45 $P_o = P_R \times e_M = 1.62 \text{ hp} \times 0.78 = \mathbf{1.26\ hp}$

CHAPTER EIGHT

REYNOLDS NUMBER, LAMINAR FLOW, TURBULENT FLOW, AND ENERGY LOSSES DUE TO FRICTION

8.1 $\upsilon = \dfrac{Q}{A} = \dfrac{0.20\ \text{ft}^3/\text{s}}{\pi(4.0\ \text{in})^2/4} \times \dfrac{144\ \text{in}^2}{\text{ft}^2} = 2.29\ \text{ft/s};\ D = 4.0\ \text{in}(1\ \text{ft}/12\ \text{in}) = 0.333\ \text{ft}$

$$N_R = \frac{\upsilon D\rho}{\mu} = \frac{(2.29)(0.333)(1.26)(1.94)}{7.5\times10^{-3}} = \mathbf{249\ Laminar}$$

(7.5×10^{-3} from App. D)

8.2 Let $N_R = 4000 = \upsilon D/\nu$: $\nu = 4.38 \times 10^{-6}\ \text{ft}^2/\text{s}$—App. A; $D = (2/12)\text{ft}$

$$\upsilon = \frac{N_R\nu}{D} = \frac{4000(4.38\times10^{-6})}{2/12} = 0.105\frac{\text{ft}}{\text{s}} \times \frac{0.3048\ \text{m}}{\text{ft}} = 0.03204\frac{\text{m}}{\text{s}}$$

8.3 Let $N_R = 2000 = \upsilon D\rho/\mu$

$$\upsilon_{\max} = \frac{N_R\mu}{D\rho} = \frac{2000(4.0\times10^{-2})}{(0.10)(0.895)(1000)} = 0.894\ \text{m/s}$$

$$Q = A\upsilon = \frac{\pi(0.10\ \text{m})^2}{4} \times 0.894\ \text{m/s} = \mathbf{7.02 \times 10^{-3}\ m^3/s}$$

8.4 $\upsilon = Q/A = \dfrac{0.25\ \text{ft}^3/\text{s}}{0.02333\ \text{ft}^2} = 10.72\ \text{ft/s};\ D = 0.1723\ \text{ft}$

a) $N_R = \dfrac{\upsilon D}{\nu} = \dfrac{(10.72)(0.1723)}{1.21\times10^{-5}} = \mathbf{1.53 \times 10^5}$ (ν from App. A)

b) $N_R = \dfrac{\upsilon D\rho}{\mu} = \dfrac{(10.72)(0.1723)(1.53)}{6.60\times10^{-6}} = \mathbf{4.28 \times 10^5}$ (ρ, μ from App. B)

c) $N_R = \dfrac{\upsilon D\rho}{\mu} = \dfrac{(10.72)(0.1723)(1.86)}{1.36 \times 10^{-2}} = \mathbf{253}$ (ρ, μ from App. B)

d) $N_R = \dfrac{\upsilon D\rho}{\nu} = \dfrac{(10.72)(0.1723)(0.87)(1.94)}{9.5\times10^{-5}} = \mathbf{3.28 \times 10^4}$ (μ from App. D)

8.5 $N_R = \dfrac{\upsilon D\rho}{\mu} = \dfrac{QD\rho}{A\mu} = \dfrac{QD\rho}{\frac{\pi D^2}{4}\mu} = \dfrac{4Q\rho}{\pi\mu D}$: $D_{\min} = \dfrac{4Q\rho}{\pi\mu N_R} = \dfrac{4Q}{\pi N_R\nu}$

$Q = 4.0\ \text{L/min} \times \dfrac{1\ \text{m}^3/\text{s}}{60000\ \text{L/min}} = 6.667 \times 10^{-5}\ \text{m}^3/\text{s}$: Let $N_R = 2000$

a) $D_{min} = \dfrac{4(6.667 \times 10^{-5})}{\pi(2000)(\nu)} = \dfrac{4.244 \times 10^{-8}}{\nu} = \dfrac{4.244 \times 10^{-8}}{6.56 \times 10^{-7}} = 0.0647 \text{ m} = 64.7 \text{ mm}$

3-in Type K copper tube—$D = 73.8$ mm

b) $D_{min} = \dfrac{4.244 \times 10^{-8}(680)}{2.87 \times 10^{-4}} = 0.101$ m; **5-in tube,** $D = 122$ mm

c) $D_{min} = \dfrac{4.244 \times 10^{-8}(790)}{1.8 \times 10^{-3}} = 0.0186$ m; $\dfrac{3}{4}$-in tube, $D = 18.9$ mm

d) $D_{min} = \dfrac{4.244 \times 10^{-8}(906)}{1.07 \times 10^{-1}} = 3.59 \times 10^{-4}$ m; $\dfrac{1}{8}$-in tube, $D = 4.57$ mm

Smallest listed

8.6 $N_R = \dfrac{\upsilon D \rho}{\mu}$; $\mu = \dfrac{\upsilon D \rho}{N_R} = \dfrac{(2.97)(0.0779)(890)}{5 \times 10^4} = 4.12 \times 10^{-3}$ Pa·s

$\upsilon = \dfrac{Q}{A} = \dfrac{8.50 \text{ L/min}}{4.768 \times 10^{-3} \text{ m}^2} \times \dfrac{1 \text{ m}^3\text{/s}}{60000 \text{ L/min}} = 2.97 \text{ m/s}$

From App. D, oil must be heated to **100°C** for SAE 10 oil.

8.7

	Auto. Hydraulic Oil	Medium Hydraulic Oil
At 212°F	$N_R = \dfrac{\upsilon D}{\nu} = \dfrac{(10)(0.4011)}{7.85 \times 10^{-5}} = \mathbf{5.11 \times 10^4}$ **turb.**	$N_R = \dfrac{10(0.4011)}{7.85 \times 10^{-5}} = \mathbf{5.11 \times 10^4}$ **turb.**
At 104°F	$N_R = \dfrac{(10)(0.4011)}{4.30 \times 10^{-4}} = \mathbf{9328}$ **turb.**	$N_R = \dfrac{10(0.4011)}{7.21 \times 10^{-4}} = \mathbf{5563}$ **turb.**

8.8 $N_R = \dfrac{\upsilon D}{\nu} = \dfrac{(3.06)(0.0475)}{1.30 \times 10^{-6}} = \mathbf{1.12 \times 10^5}$ **Turbulent**

$\upsilon = \dfrac{Q}{A} = \dfrac{325 \text{ L/min}}{1.772 \times 10^{-3} \text{ m}^2} \times \dfrac{1 \text{ m}^3\text{/s}}{60000 \text{ L/min}} = 3.06 \text{ m/s}$

8.9 $N_R = \dfrac{\upsilon D \rho}{\mu} = \dfrac{(0.899)(0.0243)(860)}{3.95 \times 10^{-4}} = \mathbf{4.76 \times 10^4}$ **Turbulent**

$\upsilon = \dfrac{Q}{A} = \dfrac{25 \text{ L/min}}{4.636 \times 10^{-4} \text{m}^2} \times \dfrac{1 \text{ m}^3\text{/s}}{60000 \text{ L/min}} = 0.899 \text{ m/s}$

8.10 $N_R = \dfrac{\upsilon D}{\nu} = \dfrac{(1.78)(0.0134)}{3.60 \times 10^{-7}} = \mathbf{6.62 \times 10^4}$ **Turbulent**

$\upsilon = \dfrac{Q}{A} = \dfrac{15.0 \text{ L/min}}{1.407 \times 10^{-4} \text{ m}^2} \times \dfrac{1 \text{ m}^3\text{/s}}{60000 \text{ L/min}} = 1.78 \text{ m/s}$

8.11 $N_R = \frac{\upsilon D}{\nu} = \frac{(8.59)(1.563)}{1.40 \times 10^{-5}}$ = **9.59 × 10⁵**

$\upsilon = \frac{Q}{A} = \frac{16.5 \text{ ft}^3\text{/s}}{1.920 \text{ ft}^2}$ = 8.59 ft/s

8.12 $\upsilon = \frac{Q}{A} = \frac{0.40 \text{ gal}}{\text{hr}} \times \frac{\text{ft}^3}{7.48 \text{ gal}} \times \frac{1 \text{ hr}}{3600 \text{ s}} \times \frac{1}{2.029 \times 10^{-5} \text{ ft}^2}$ = 0.732 ft/s

$N_R = \frac{\upsilon D \rho}{\mu} = \frac{(0.732)(0.00508)(0.88)(1.94)}{6.2 \times 10^{-3}}$ = **1.02 Laminar**

8.13 $N_R = \frac{\upsilon D \rho}{\mu} = \frac{(0.732)(0.00508)(0.88)(1.94)}{1.90 \times 10^{-4}}$ = **33.4 Laminar**

Note: sg of oil may be slightly lower at 160°F.

8.14 $N_R = \frac{\upsilon D \rho}{\mu}$; $\upsilon = \frac{N_R \mu}{D \rho} = \frac{(4000)(4.01 \times 10^{-5})}{(0.2423)(1.56)}$ = **0.424 ft/s**

$Q = A\upsilon = 4.609 \times 10^{-2} \text{ ft}^2 \times 0.424 \text{ ft/s} =$ **1.96×10^{-2} ft³/s**

8.15 $\upsilon = \frac{Q}{A} = \frac{45 \text{ L/min}}{2.812 \times 10^{-4} \text{ m}^2} \times \frac{1 \text{ m}^3\text{/s}}{60000 \text{ L/min}}$ = 2.67 m/s

$N_R = \frac{\upsilon D \rho}{\mu} = \frac{(2.67)(0.01892)(0.89)(1000)}{8 \times 10^{-3}}$ = **5.61 × 10³ Turbulent**

Note: μ from App. D.

8.16 $N_R = \frac{\upsilon D \rho}{\mu} = \frac{(2.67)(0.01892)(890)}{3.0}$ = **15.0** very low—**Laminar**

8.17 $\upsilon = \frac{Q}{A} = \frac{45 \text{ L/min}}{1.772 \times 10^{-3} \text{ m}^2} \times \frac{1 \text{ m}^3\text{/s}}{60000 \text{ L/min}}$ = 0.423 m/s

$N_R = \frac{\upsilon D \rho}{\mu} = \frac{(0.423)(0.0475)(890)}{8 \times 10^{-3}}$ = **2237 Critical Zone**

8.18 $N_R = \frac{\upsilon D \rho}{\mu} = \frac{(0.423)(0.0475)(890)}{3.0}$ = **5.97** very low—**Laminar**

8.19 $\upsilon = \frac{Q}{A} = \frac{1.65 \text{ gal/min}}{2.509 \times 10^{-4} \text{ ft}^2} \times \frac{1 \text{ ft}^3\text{/s}}{449 \text{ gal/min}}$ = 14.65 ft/s

$N_R = \frac{\upsilon D}{\nu} = \frac{(14.65)(0.01788)}{2.37 \times 10^{-4}}$ = **1105 Laminar**

8.20 $N_R = \frac{\upsilon D}{\nu} = \frac{(14.65)(0.01788)}{4.20 \times 10^{-5}}$ = **6237 Turbulent**

Changing from laminar flow, through critical zone, into turbulent flow could cause erratic performance. Also, $\upsilon = 14.65$ ft/s is quite high, causing large pressure drops through the system.

8.21 $A = \dfrac{Q}{\upsilon} = \dfrac{500\text{ gal/min}}{10.0\text{ ft/s}} \times \dfrac{1\text{ ft}^3\text{/s}}{449\text{ gal/min}} = 0.1114\text{ ft}^2 \Rightarrow$ 5-in Sch. 40 pipe

$A = 0.1390\text{ ft}^2, D = 0.4026\text{ ft}$

Actual $\upsilon = \dfrac{Q}{A} = \dfrac{(500/499)\text{ft}^3\text{/s}}{0.1390\text{ ft}^2} = 8.01\text{ ft/s}$

$N_R = \dfrac{\upsilon D\rho}{\mu} = \dfrac{(8.01)(0.4026)(2.13)}{3.38\times10^{-4}} = \mathbf{2.12 \times 10^4}$

8.22 $\upsilon_1 = \dfrac{N_R\nu}{D} = \dfrac{2000(1.21\times10^{-5}\text{ ft}^2\text{/s})}{0.0621\text{ ft}} = 0.3897\text{ ft/s}$

For $N_R = 4000$, $\upsilon_2 = 2(0.3897\text{ ft/s}) = 0.7794\text{ ft/s}$

$Q_1 = A\upsilon_1 = (3.027 \times 10^{-3}\text{ ft}^2)(0.3897\text{ ft/s})$

$= 1.180 \times 10^{-3}\text{ ft}^3\text{/s} \times \dfrac{449\text{ gal/min}}{1\text{ ft}^3\text{/s}}$

$\boldsymbol{Q_1} = \mathbf{0.530}$ **gal/min—Lower Limit**

$\boldsymbol{Q_2 = 2Q_1} = \mathbf{1.060}$ **gal/min—Upper Limit**

8.23 (See Prob. 8.22)

$\upsilon_1 = \dfrac{N_R\nu}{D} = \dfrac{(2000)(3.84\times10^{-6})}{0.0621} = 0.1237\text{ ft/s};\ \upsilon_2 = 2\upsilon_1 = 0.2473\text{ ft/s}$

$Q_1 = A\upsilon_1 = (3.027 \times 10^{-3}\text{ ft}^2)(0.1237\text{ ft/s}) \times \dfrac{449\text{ gal/min}}{1\text{ ft}^3\text{/s}} = 0.1681\text{ gal/min}$

$Q_2 = 2Q_1 = \mathbf{0.3362}$ **gal/min**

8.24 $\upsilon = 1.30\text{ cs} \times \dfrac{1.076\times10^{-5}\text{ ft}^2\text{/s}}{1\text{ cs}} = 1.40 \times 10^{-5}\text{ ft}^2\text{/s}$

$Q = 45\text{ gal/min} \times \dfrac{1\text{ ft}^3\text{/s}}{449\text{ gal/min}} = 0.1002\text{ ft}^3\text{/s}$

$\upsilon = \dfrac{Q}{A} = \dfrac{0.1002\text{ ft}^3\text{/s}}{6.842\times10^{-3}\text{ ft}^2} = 14.65\text{ ft/s}$

$N_R = \dfrac{\upsilon D}{\nu} = \dfrac{(14.65)(0.0933)}{1.40\times10^{-5}} = \mathbf{9.78 \times 10^4}$

8.25 $\nu = 17.0\text{ cs} \times \dfrac{10^{-6}\text{ m}^2\text{/s}}{1\text{ cs}} = 1.7 \times 10^{-5}\text{ m}^2\text{/s}$

$\upsilon = \dfrac{Q}{A} = \dfrac{215\text{ L/min}}{5.017\times10^{-4}\text{m}^2} \times \dfrac{1\text{ m}^3\text{/s}}{60000\text{ L/min}} = 7.142\text{ m/s}$

$N_R = \dfrac{\upsilon D}{\nu} = \dfrac{(7.142)(0.0253)}{1.70\times10^{-5}} = 1.06 \times 10^4$

8.26 $\nu = 1.20 \text{ cs} \times \frac{10^{-6} \text{ m}^2/\text{s}}{1 \text{ cs}} = 1.20 \times 10^{-6} \text{ m}^2/\text{s}$

$$\upsilon = \frac{Q}{A} = \frac{200 \text{ L/min}}{3.835 \times 10^{-4} \text{m}^2} \times \frac{1 \text{ m}^3/\text{s}}{60000 \text{ L/min}} = 8.69 \text{ m/s}$$

$$N_R = \frac{\upsilon D}{\nu} = \frac{(8.69)(0.0221)}{1.20 \times 10^{-6}} = \mathbf{1.60 \times 10^5}$$

8.27 $\frac{p_1}{\gamma_o} + z_1 + \frac{\upsilon_1^2}{2g} - h_L = \frac{p_2}{\gamma_o} + z_2 + \frac{\upsilon_2^2}{2g}$: $\upsilon_1 = \upsilon_2$

$$p_1 - p_2 = \gamma_o[z_2 - z_1 + h_L]$$

$$N_R = \frac{\upsilon D \rho}{\mu} = \frac{(0.64)(0.0243)(0.86)(1000)}{1.70 \times 10^{-2}} = 787 \text{ (Laminar)}; f = \frac{64}{N_R} = 0.0813$$

$$h_L = f\,\frac{L}{D}\frac{\upsilon^2}{2g} = 0.0813 \times \frac{60}{0.0243} \times \frac{(0.64)^2}{2(9.81)} = 4.19 \text{ m}$$

$$\boldsymbol{p_1 - p_2} = (0.86)(9.82 \text{ kN/m}^3)[-60 \text{ m} + 4.19 \text{ m}] = -471 \text{ kN/m}^2 = \mathbf{-471\ kPa}$$

8.28 $\frac{p_1}{\gamma_w} + z_1 + \frac{\upsilon_1^2}{2g} - h_L = \frac{p_2}{\gamma_w} + z_2 + \frac{\upsilon_2^2}{2g}$: $\upsilon_1 = \upsilon_2$; $z_1 = z_2$: $p_1 - p_2 = \gamma_w h_L$

$$\upsilon = \frac{Q}{A} = \frac{12.9 \text{ L/min}}{1.407 \times 10^{-4} \text{ m}^2} \times \frac{1 \text{ m}^3/\text{s}}{60000 \text{ L/min}} = 1.528 \text{ m/s}$$

$$N_R = \frac{\upsilon D}{\nu} = \frac{(1.528)(0.0134)}{3.83 \times 10^{-7}} = 5.35 \times 10^4 \text{ (turbulent)}$$

$D/\varepsilon = 0.0134/1.50 \times 10^{-6} = 8933$; Then $f = 0.0205$

$$h_L = f\,\frac{L}{D}\frac{\upsilon^2}{2g} = (0.0205) \cdot \frac{45}{0.0134} \cdot \frac{(1.528)^2}{2(9.81)} = 8.19 \text{ m}$$

$$\boldsymbol{p_1 - p_2} = \gamma_w h_L = 9.56 \text{ kN/m}^3 \times 8.19 \text{ m} = 78.3 \text{ kN/m}^2 = \mathbf{78.3\ kPa}$$

8.29 Let $N_R = 2000$; $f = 64/N_R = 0.032$; $N_R = \frac{\upsilon D \rho}{\mu}$

$$\upsilon = \frac{N_R \mu}{D\rho} = \frac{(2000)(8.3 \times 10^{-4})}{(0.3355)(0.895)(1.94)} = 2.85 \text{ ft/s}$$

$$h_L = f\,\frac{L}{D}\frac{\upsilon^2}{2g} = (0.032) \cdot \frac{100}{0.3355} \cdot \frac{(2.85)^2}{2(32.2)} \text{ ft} = 1.20 \text{ ft} = \mathbf{1.20\ ft \cdot lb/lb}$$

8.30 $\dfrac{p_A}{\gamma_o} + z_A + \dfrac{\upsilon_A^2}{2g} - h_L = \dfrac{p_B}{\gamma_o} + z_B + \dfrac{\upsilon_B^2}{2g}$: $\upsilon_A = \upsilon_B$

$p_B = p_A + \gamma_o[z_A - z_B - h_L]$

$\upsilon = \dfrac{N_R \mu}{D\rho} = \dfrac{(800)(4\times10^{-4})}{(0.2557)(0.90)(1.94)} = 0.717$ ft/s

$h_L = f \dfrac{L}{D}\dfrac{\upsilon^2}{2g} = \dfrac{64}{800}\cdot\dfrac{5000}{0.2557}\cdot\dfrac{(0.717)^2}{2(32.2)} = 12.5$ ft

$p_B = 50$ psig + (0.90)(62.4 lb/ft^3)[−20 ft − 12.5 ft]$\dfrac{1\text{ ft}^2}{144\text{ in}^2}$ = **37.3 psig**

8.31 $\dfrac{p_1}{\gamma_b} + z_1 + \dfrac{\upsilon_1^2}{2g} - h_L = \dfrac{p_2}{\gamma_b} + z_2 + \dfrac{\upsilon_2^2}{2g}$: $z_1 = z_2$: $\upsilon_1 = \upsilon_2$: $p_1 - p_2 = \gamma_b h_L = \gamma_b f \dfrac{L}{D}\dfrac{\upsilon^2}{2g}$

$\upsilon = \dfrac{Q}{A} = \dfrac{20\text{ L/min}}{4.636\times10^{-4}\text{ m}^2}\times\dfrac{1\text{ m}^3/\text{s}}{60000\text{ L/min}} = 0.719$ m/s

$\rho = \dfrac{\gamma}{g} = \dfrac{8.62\text{ kN}}{\text{m}^3}\times\dfrac{\text{s}^2}{9.81\text{ m}}\times\dfrac{10^3\text{ N}}{\text{kN}}\times\dfrac{1\text{ kg}\cdot\text{m/s}^2}{\text{N}} = 879$ kg/m^3

$N_R = \dfrac{\upsilon D\rho}{\mu} = \dfrac{(0.719)(0.0243)(879)}{3.95\times10^{-4}} = 3.89\times10^4$

$D/\varepsilon = 0.0243/4.6\times10^{-5} = 528$; Then $f = 0.027$

$p_1 - p_2 = 8.62$ kN/m^3 × 0.027 × $\dfrac{100}{0.0243}\times\dfrac{(0.719)^2}{2(9.81)}$ m = 25.2 kN/m^2 = **25.2 kPa**

8.32 From Prob. 8.31, $p_1 - p_2 = \gamma_w h_L$; $h_L = p_1 - p_2/\gamma_w$

$h_L = \dfrac{(1035-669)\text{kN/m}^2}{9.81\text{ kN/m}^3} = 37.3\text{ m} = f\dfrac{L}{D}\dfrac{\upsilon^2}{2g}$

$f = \dfrac{h_L D 2g}{L\upsilon^2} = \dfrac{(37.3)(0.03388)(2)(9.81)}{(30)(4.16)^2} = 0.048$

$\upsilon = \dfrac{Q}{A} = \dfrac{225\text{ L/min}}{9.017\times10^{-4}\text{m}^2}\times\dfrac{1\text{ m}^3/\text{s}}{60000\text{ L/min}} = 4.16$ m/s

$N_R = \dfrac{\upsilon D}{\nu} = \dfrac{(4.16)(0.03388)}{1.30\times10^{-6}} = 1.08\times10^5$: Then $\dfrac{D}{\varepsilon} = 55$ for $f = 0.048$

$\varepsilon = D/55 = 0.03388/55 =$ **6.16 × 10^{-4} m**

8.33 $\frac{p_1}{\gamma_w} + z_1 + \frac{\upsilon_1^2}{2g} - h_L = \frac{p_2}{\gamma_w} + z_2 + \frac{\upsilon_2^2}{2g}$

$h = z_1 - z_2 = h_L + \frac{\upsilon_2^2}{2g}$

$\upsilon = \frac{Q}{A} = \frac{2.50\ \text{ft}^3/\text{s}}{0.2006\ \text{ft}^2} = 12.46\ \text{ft/s}$

Pt. 1 at tank surface. $p_1 = 0$, $\upsilon_1 = 0$
Pt. 2 in outlet stream. $p_2 = 0$
$D = 0.5054$ ft
$A = 0.2006\ \text{ft}^2$

$N_R = \frac{\upsilon D}{\nu} = \frac{(12.46)(0.5054)}{9.15 \times 10^{-6}} = 6.88 \times 10^5$: $\frac{D}{\varepsilon} = \frac{0.5054}{1.5 \times 10^{-4}} = 3369$: $f = 0.0165$

$h = f\,\frac{L}{D}\,\frac{\upsilon^2}{2g} + \frac{\upsilon^2}{2g} = 0.0165 \times \frac{550}{0.5054} \times \frac{(12.46)^2}{2(32.2)} + \frac{(12.46)^2}{2(32.2)} = \mathbf{45.7\ ft}$

8.34 From Prob. 8.31, $p_1 - p_2 = \gamma_w h_L = \gamma_w f\,\frac{L}{D}\,\frac{\upsilon^2}{2g}$

$\upsilon = \frac{Q}{A} = \frac{15.0\ \text{ft}^3/\text{s}}{\pi(1.50\ \text{ft})^2/4} = 8.49\ \text{ft/s}$

$N_R = \frac{\upsilon D}{\nu} = \frac{(8.49)(1.50)}{1.40 \times 10^{-5}} = 9.09 \times 10^5$: $\frac{D}{\varepsilon} = \frac{1.50}{4 \times 10^{-4}} = 3750$; $f = 0.0158$

$p_1 - p_2 = \gamma_w\, f\,\frac{L}{D}\,\frac{\upsilon^2}{2g} = \frac{62.4\ \text{lb}}{\text{ft}^3} \times 0.0158 \times \frac{5280\ \text{ft}}{1.50\ \text{ft}} \times \frac{(8.49)^2\ \text{ft}^2/\text{s}^2}{2(32.2\ \text{ft/s}^2)} \times \frac{1\ \text{ft}^2}{144\ \text{in}^2} = \mathbf{30.5\ psi}$

8.35 $Q = 1500\ \text{gal/min} \times \frac{1\ \text{ft}^3/\text{s}}{449\ \text{gal/min}} = 3.34\ \text{ft}^3/\text{s}$

$\upsilon_A = \frac{Q}{A_A} = \frac{3.34\ \text{ft}^3/\text{s}}{0.5479\ \text{ft}^2} = 6.097\ \text{ft/s}$; $\frac{\upsilon_A^2}{2g} = \frac{(6.097)^2}{2(32.2)} = 0.577\ \text{ft}$

a) $\frac{p_1}{\gamma_w} + z_1 + \frac{\upsilon_1^2}{2g} - h_{L_s} = \frac{p_A}{\gamma_w} + z_A + \frac{\upsilon_A^2}{2g}$ **Pt. 1 at tank surface. $p_1 = 0$, $\upsilon_1 = 0$**

$z_1 - z_A = h = \frac{p_A}{\gamma_w} + \frac{\upsilon_A^2}{2g} + h_L$

$N_R = \frac{\upsilon_A D}{\nu} = \frac{(6.097)(0.835)}{1.21 \times 10^{-5}} = 4.21 \times 10^5$: $\frac{D}{\varepsilon} = \frac{0.835}{1.5 \times 10^{-4}} = 5567$: $f = 0.0155$

$h_L = f\,\frac{L}{D}\,\frac{\upsilon^2}{2g} = (0.0155) \times \frac{45}{0.835} \times 0.577\ \text{ft} = 0.482\ \text{ft}$

$h = \frac{5.0\ \text{lb} \cdot \text{ft}^3}{\text{in}^2\, 62.4\ \text{lb}}\,\frac{144\ \text{in}^2}{\text{ft}^2} + 0.577 + 0.482 = \mathbf{12.60\ ft}$

b) $$\frac{p_A}{\gamma}+z_A+\frac{\upsilon_A^2}{2g}-h_{L_d}+h_A=\frac{p_B}{\gamma}+z_B+\frac{\upsilon_B^2}{2g}$$

$$\upsilon_B=\frac{Q}{A_B}=\frac{3.34\text{ ft}^3/\text{s}}{0.3472\text{ ft}^2}=9.62\text{ ft/s}$$

$$h_A=\frac{p_B-p_A}{\gamma_w}+(z_B-z_A)+\frac{\upsilon_B^2-\upsilon_A^2}{2g}+h_{L_d}=\frac{(85-5)\text{ lb ft}^3\,(144\text{ in}^2)}{\text{in}^2(62.4\text{ lb})\text{ft}^2}+25$$

$$+\frac{(9.62^2-6.097^2)\text{ft}^2/\text{s}^2}{2(32.2\text{ ft/s}^2)}+89.9=300.4\text{ ft}$$

$$N_{R_B}=\frac{\upsilon_B D_B}{\nu}=\frac{(9.62)(0.6651)}{1.21\times10^{-5}}=5.29\times10^5$$

$$D/\varepsilon=\frac{0.6651}{1.5\times10^{-4}}=4434\text{: } f=0.016$$

$$h_{L_d}=f\frac{L}{D}\frac{\upsilon^2}{2g}=(0.016)\times\frac{2600}{0.6651}\times\frac{(9.62)^2}{2(32.2)}=89.9\text{ ft}$$

$$P_A=h_A\gamma_w Q=300.4\text{ ft}\times\frac{62.4\text{ lb}}{\text{ft}^3}\times\frac{3.34\text{ ft}^3}{\text{s}}\frac{\text{hp}}{550\text{ ft}\cdot\text{lb/s}}=\mathbf{113.8\ hp}$$

8.36 $$\frac{p_1}{\gamma}+z_1+\frac{\upsilon_1^2}{2g}+h_A-h_L=\frac{p_2}{\gamma}+z_2+\frac{\upsilon_2^2}{2g}$$

Pt. 1 at well surface ($p_1 = 0$ psig).
Pt. 2 at tank surface.
$\upsilon_1=\upsilon_2=0$

$$h_A=\frac{p_2}{\gamma_w}+(z_2-z_1)+h_L$$

$$Q=\frac{745\text{ gal}}{\text{h}}\times\frac{1\text{ h}}{60\text{ min}}\times\frac{1\text{ ft}^3/\text{s}}{449\text{ gal/min}}=0.0277\text{ ft}^3/\text{s}$$

$$\upsilon=\frac{Q}{A}=\frac{0.0277\text{ ft}^3/\text{s}}{0.0060\text{ ft}^2}=4.61\text{ ft/s } \textbf{in pipe}$$

$$N_R=\frac{\upsilon D}{\nu}=\frac{(4.61)(0.0874)}{1.21\times10^{-5}}=3.33\times10^4\text{: }\frac{D}{\varepsilon}=\frac{0.0874}{1.5\times10^{-4}}=583\text{: } f=0.0275$$

$$h_L=f\frac{L}{D}\frac{\upsilon^2}{2g}=(0.0275)\frac{140}{0.0874}\times\frac{(4.61)^2}{2(32.2)}\text{ ft}=14.54\text{ ft}$$

$$h_A=\frac{(40\text{ lb})\text{ft}^3(144\text{ in}^2)}{\text{in}^2(62.4\text{ lb})\text{ft}^2}+120+14.54=226.8\text{ ft}$$

$P_A=h_A\gamma Q=(226.8\text{ ft})(62.4\text{ lb/ft}^3)(0.0277\text{ ft}^3/\text{s})/550\text{ ft}\cdot\text{lb/s/hp}=$ **0.713 hp**

8.37 $$\frac{p_1}{\gamma_w}+z_1+\frac{\upsilon_1^2}{2g}-h_L=\frac{p_2}{\gamma_w}+z_2+\frac{\upsilon_2^2}{2g}$$

Pt. 1 at tank surface. $\upsilon_1 = 0$
Pt. 2 in outlet stream. $p_2 = 0$

$$p_1 = \gamma_w\left[(z_2-z_1)+\frac{\upsilon_2^2}{2g}+h_L\right]$$

$$\upsilon_2 = \frac{Q}{A_2}=\frac{75\text{ gal/min}}{0.01414\text{ ft}^2}\times\frac{1\text{ ft}^3\text{/s}}{449\text{ gal/min}} = 11.8\text{ ft/s: }\frac{\upsilon^2}{2g}=\frac{(11.8)^2}{2(32.2)} = 2.167\text{ ft}$$

$$N_R = \frac{\upsilon D}{\nu}=\frac{(11.8)(0.1342)}{1.21\times10^{-5}}=1.31\times10^5:\ \frac{D}{\varepsilon}=\frac{0.1342}{1.5\times10^{-4}} = 895: f = 0.0225$$

$$h_L = f\ \frac{L}{D}\frac{\upsilon^2}{2g}=(0.0225)\frac{300}{0.1342}\ (2.167\text{ ft}) = 109.0\text{ ft}$$

$$p_1 = \frac{62.4\text{ lb}}{\text{ft}^3}[-3\text{ ft} + 2.167\text{ ft} + 109.0\text{ ft}]\frac{1\text{ ft}^2}{144\text{ in}^2} = \mathbf{46.9\ psi}$$

8.38 $$\frac{p_1}{\gamma}+z_1+\frac{\upsilon_1^2}{2g}+h_A-h_L=\frac{p_2}{\gamma}+z_2+\frac{\upsilon_2^2}{2g}$$

Pt. 1 at tank surface. $p_1 = 0$; $\upsilon_1 = 0$
Pt. 2 in hose at nozzle.
Pt. 3 in hose at pump outlet.
$\upsilon_3 = \upsilon_2$

a) $$h_A = \frac{p_2}{\gamma}+(z_2-z_1)+\frac{\upsilon_2^2}{2g}+h_L$$

$$\upsilon = \frac{Q}{A}=\frac{95\text{ L/min}}{\pi(0.025\text{ m})^2/4}\times\frac{1\text{ m}^3\text{/s}}{60000\text{ L/min}} = 3.23\text{ m/s: }\frac{\upsilon^2}{2g}=\frac{(3.23)^2}{2(9.81)}= 0.530\text{ m}$$

$$N_R = \frac{\upsilon D\rho}{\mu}=\frac{(3.23)(0.025)(1100)}{2.0\times10^{-3}}=4.44\times10^4:\ f = 0.021\text{ (smooth)}$$

$$h_L = f\ \frac{L}{D}\frac{\upsilon^2}{2g}=(0.021)\frac{85}{0.025}(0.530)\text{m} = 37.86\text{ m}$$

$$h_A = \frac{140\text{ kN/m}^2}{(1.10)(9.81\text{ kN/m}^3)}+7.3\text{ m}+0.530+37.86\text{ m} = 58.67\text{ m}$$

$$P_A = h_A\gamma Q = (58.67\text{ m})(1.10)(9.81\text{ kN/m}^3)(95/60000)\text{m}^3\text{/s} = 1.00\text{ kN·m/s} = \mathbf{1.00\ kW}$$

b) $$\frac{p_3}{\gamma}+z_3+\frac{\upsilon_3^2}{2g}-h_L=\frac{p_2}{\gamma}+z_2+\frac{\upsilon_2^2}{2g}:\ p_3 = p_2 + [(z_2-z_3)+h_L]\gamma$$

$$p_3 = 140\text{ kPa} + (1.10)(9.81\text{ kN/m}^3)[8.5\text{ m} + 37.86\text{ m}] = \mathbf{640\ kPa}$$

8.39 $Q = 1200 \text{ L/min} \times 1 \text{ m}^3\text{/s}/60000 \text{ L/min} = 0.02 \text{ m}^3\text{/s}$

$$\upsilon = \frac{Q}{A} = \frac{0.02 \text{ m}^3\text{/s}}{1.682\times10^{-2} \text{ m}^2} = 1.189 \text{ m/s}$$

a) $$p_2 - p_3 = \gamma_o h_L = \gamma_o f \frac{L}{D}\frac{\upsilon^2}{2g}$$

$$N_R = \frac{\upsilon D\rho}{\mu} = \frac{1.189(0.1463)(930)}{0.15} = 1079 \text{ Laminar}$$

$$p_2 - p_3 = \gamma_o h_L = (0.93)(9.81 \text{ kN/m}^3)\left(\frac{64}{1079}\right)\left(\frac{3200}{0.1463}\right)\frac{(1.189)^2}{2(9.81)} \text{ m} = \mathbf{853 \text{ kPa}}$$

b) $$\frac{p_1}{\gamma} + z_1 + \frac{\upsilon_1^2}{2g} + h_A - h_L = \frac{p_3}{\gamma} + z_3 + \frac{\upsilon_3^2}{2g}: \; p_1 = p_3,\ \upsilon_1 = \upsilon_3,\ z_1 = z_3$$

$$h_A = h_L = \frac{853 \text{ kN/m}^2}{(0.93)(9.81 \text{ kN/m}^3)} = 93.5 \text{ m}$$

$$P_A = h_A\gamma Q = (93.5 \text{ m})(0.93)(9.81 \text{ kN/m}^3)(0.02 \text{ m}^3\text{/s}) = 17.1 \text{ kN·m/s} = \mathbf{17.1 \text{ kW}}$$

8.40 At 100°C, $\mu = 7.9 \times 10^{-3}$ Pa·s

a) With pumping stations 3.2 km apart:

$$N_R = \frac{\upsilon D\rho}{\mu} = \frac{(1.189)(0.1463)(930)}{7.9\times10^{-3}} = 2.05 \times 10^4 \text{ turbulent}$$

$D/\varepsilon = 0.1463 \text{ m}/4.6 \times 10^{-5} \text{ m} = 3180;\ f = 0.026$

$$h_A = h_L = f\frac{L}{D}\frac{\upsilon^2}{2g} = (0.026)\frac{3200}{0.1463}\frac{(1.189)^2}{2(9.81)} \text{ m} = 40.98 \text{ m}$$

$$P_A = h_A\gamma Q = (40.98)(0.93)(9.81)(0.02) = \mathbf{7.48 \text{ kW}}$$

b) Let $h_L = 93.5$ m (from Prob. 9.13): $h_L = f\dfrac{L}{D}\dfrac{\upsilon^2}{2g}$

$$L = \frac{h_L D(2g)}{f\upsilon^2} = \frac{(93.5 \text{ m})(0.1463 \text{ m})(2)(9.81 \text{ m/s}^2)}{(0.026)(1.189 \text{ m/s})^2} = 8682 \text{ m} = \mathbf{8.68 \text{ km}}$$

8.41 $\frac{p_1}{\gamma_w} + z_1 + \frac{\upsilon_1^2}{2g} - h_L = \frac{p_B}{\gamma_w} + z_B + \frac{\upsilon_B^2}{2g}$

$p_B = \gamma_w\left[(z_1 - z_B) - \frac{\upsilon_B^2}{2g} - h_L\right]$

Pt. 1 at tank surface. $p_1 = 0$, $\upsilon_1 = 0$

$Q = \frac{900 \text{ L/min } 1 \text{ m}^3/\text{s}}{60000 \text{ L/min}} = 0.015 \text{ m}^3/\text{s}$

$\upsilon = \frac{Q}{A} = \frac{0.015 \text{ m}^3/\text{s}}{7.538\times10^{-3} \text{ m}^2} = 1.99 \text{ m/s}$

$N_R = \frac{\upsilon D}{\nu} = \frac{(1.99)(0.098)}{1.30\times10^{-6}} = 1.50\times10^5 : \frac{D}{\varepsilon} = \frac{0.098}{1.5\times10^{-6}} = 65333 : f = 0.0165$

$h_L = f\,\frac{L}{D}\frac{\upsilon^2}{2g} = (0.0165)\frac{80.5}{0.098}\times\frac{(1.99)^2}{2(9.81)} = 2.735 \text{ m}$

$p_B = 9.81 \text{ kN/m}^3\left[12 - \frac{(1.99)^2}{2(9.81)} - 2.735\right]\text{m} = \mathbf{89.9\ kPa}$

8.42 $Q = 50 \text{ gal/min} \times \frac{1 \text{ ft}^3/\text{s}}{449 \text{ gal/min}} = 0.1114 \text{ ft}^3/\text{s}: \upsilon = \frac{Q}{A} = \frac{0.1114 \text{ ft}^3/\text{s}}{0.0060 \text{ ft}^2} = 18.56 \text{ ft/s}$

$\frac{p_1}{\gamma_w} + z_1 + \frac{\upsilon_1^2}{2g} + h_A - h_L = \frac{p_2}{\gamma_w} + z_2 + \frac{\upsilon_2^2}{2g}: p_1 = 0, \upsilon_1 = \upsilon_2 = 0$

$h_A = \frac{p_2}{\gamma_w} + (z_2 - z_1) + h_L$

$N_R = \frac{\upsilon D}{\nu} = \frac{(18.56)(0.0874)}{1.21\times10^{-5}} = 1.34\times10^5 : \frac{D}{\varepsilon} = \frac{0.0874}{1.5\times10^{-4}} = 583 : f = 0.0243$

$h_L = f\,\frac{L}{D}\frac{\upsilon^2}{2g} = (0.0243)\frac{225}{0.0874}\times\frac{(18.56)^2}{2(32.2)} \text{ ft} = 335 \text{ ft}$

$h_A = \frac{(40 \text{ lb})\text{ft}^3}{\text{in}^2\ 62.4 \text{ lb}}\times\frac{144 \text{ in}^2}{\text{ft}^2} + 220 \text{ ft} + 335 \text{ ft} = 647 \text{ ft}$

$P_A = h_A\gamma_w Q = (647 \text{ ft})(62.4 \text{ lb/ft}^3)(0.1114 \text{ ft}^3/\text{s})/550 =$ **8.18 hp**

(b) Increase the pipe size to 1 1/2-in Schedule 40. Results: $\upsilon = 7.88$ ft/s; $N_R = 8.74\times10^4$; $D/\varepsilon = 895$; $f = 0.0232$; Then, $h_L = 37.5$ ft; $h_A = 349.8$ ft; **Power = P_A = 4.42 hp.**

8.43 $\frac{p_1}{\gamma_o} + z_1 + \frac{\upsilon_1^2}{2g} - h_L = \frac{p_2}{\gamma_o} + z_2 + \frac{\upsilon_2^2}{2g}: p_1 - p_2 = \gamma_o h_L$

$\upsilon = \frac{Q}{A} = \frac{60 \text{ gal/min}}{0.01414 \text{ ft}^2}\times\frac{1 \text{ ft}^3/\text{s}}{449 \text{ gal/min}} = 9.45 \text{ ft/s}$

$N_R = \frac{\upsilon D\rho}{\mu} = \frac{(9.45)(0.1342)(0.94)(1.94)}{8.5\times10^{-3}} = 272$ Laminar

$h_L = f\,\frac{L}{D}\frac{\upsilon^2}{2g} = \frac{64}{272}\times\frac{40}{0.1342}\times\frac{(9.45)^2}{2(32.2)} \text{ ft} = 97.23 \text{ ft}$

$p_1 - p_2 = \gamma_o h_L = (0.94)\frac{(62.4 \text{ lb})}{\text{ft}^3}(97.23 \text{ ft})\frac{1 \text{ ft}^2}{144 \text{ in}^2} =$ **39.6 psi**

8.44 $\frac{p_A}{\gamma}+z_A+\frac{\upsilon_A^2}{2g}+h_A-h_L=\frac{p_B}{\gamma}+z_B+\frac{\upsilon_B^2}{2g}$

$$h_A=\frac{p_B-p_A}{\gamma}+z_B-z_A+\frac{\upsilon_B^2-\upsilon_A^2}{2g}+h_L$$

$$\upsilon_A=\frac{Q}{A_A}=\frac{0.50\text{ ft}^3/\text{s}}{0.06868\text{ ft}^2}=7.28\text{ ft/s}:\ \upsilon_B=\frac{Q}{A_B}=\frac{0.50}{0.03326}=15.03\text{ ft/s}$$

$$N_{R_B}=\frac{\upsilon_B D\rho}{\mu}=\frac{(15.03)(0.2058)(1.026)(1.94)}{4.0\times10^{-5}}=1.54\times10^5$$

$$\frac{D}{\varepsilon}=\frac{0.2058}{1.5\times10^{-4}}=1372:\ f=0.020$$

$$h_L=f\ \frac{L}{D}\frac{\upsilon^2}{2g}=(0.020)\frac{80}{0.2058}\times\frac{(15.03)^2}{2(32.2)}\text{ ft}=27.28\text{ ft}$$

$$h_A=\frac{[25.0-(-3.50)]\text{lb ft}^3\ 144\text{ in}^2}{\text{in}^2(1.026)(62.4\text{ lb})\text{ ft}^2}+80\text{ ft}+\frac{(15.03)^2-(7.28)^2\text{ft}^2/\text{s}^2}{2(32.2\text{ ft/s}^2)}+27.28\text{ ft}=174.1\text{ ft}$$

$P_A=h_A\gamma Q=(174.1\text{ ft})(1.026)(62.4\text{ lb/ft}^3)(0.50\text{ ft}^3/\text{s})/550=$ **10.13 hp**

8.45 $N_R=\frac{\upsilon D\rho}{\mu}=\frac{QD\rho}{A\mu}=\frac{QD\rho}{\frac{\pi D^2}{4}\mu}=\frac{4Q\rho}{\pi D\mu}:\ D_{min}=\frac{4Q\rho}{\pi N_R\mu}$

$$D_{min}=\frac{4(0.90\text{ ft}^3/\text{s})(1.24)(1.94\text{ lb}\cdot\text{s}^2/\text{ft}^4)}{\pi(300)(5.0\times10^{-2}\text{ lb}\cdot\text{s/ft}^2)}=0.184\text{ ft}$$

2 1/2-in Type K Copper Tube: $D=0.2029$ ft: $A=0.03234\text{ ft}^2$

$$\upsilon=\frac{Q}{A}=\frac{0.90\text{ ft}^3/\text{s}}{0.03234\text{ ft}^2}=27.8\text{ ft/s}$$

$$N_R=\frac{\upsilon D\rho}{\mu}=\frac{(27.8)(0.2029)(1.24)(1.94)}{5.0\times10^{-2}}=272$$

$$p_1-p_2=\gamma_g h_L=\gamma_g f\frac{L}{D}\frac{\upsilon^2}{2g}=(1.24)(62.4)\frac{64}{272}\times\frac{55}{0.2029}\times\frac{(27.8)^2}{2(32.2)}\frac{\text{lb}}{\text{ft}^2}\frac{1\text{ ft}^2}{144\text{ in}^2}$$

= **411 psi**

8.46 $\frac{p_1}{\gamma_w}+z_1+\frac{\upsilon_1^2}{2g}-h_L=\frac{p_2}{\gamma_w}+z_2+\frac{\upsilon_2^2}{2g}$

Pt. 1 at pump outlet in pipe.
Pt. 2 at reservoir surface. $p_2=0, \upsilon_2=0$
$\upsilon=\frac{Q}{A}=\frac{4.00\text{ ft}^3/\text{s}}{0.3472\text{ ft}^2}=11.52\text{ ft/s}$

$$p_1=\gamma_w\left[(z_2-z_1)-\frac{\upsilon_1^2}{2g}+h_L\right]$$

$$N_R=\frac{\upsilon D}{\nu}=\frac{(11.52)(0.6651)}{1.21\times10^{-5}}=6.33\times10^5:\ \frac{D}{\varepsilon}=\frac{0.6651}{1.5\times10^{-4}}=4434:f=0.0155$$

$$h_L=f\ \frac{L}{D}\frac{\upsilon^2}{2g}=(0.0155)\cdot\frac{2500}{0.6651}\cdot\frac{(11.52)^2}{2(32.2)}\text{ ft}=120.1\text{ ft}$$

$$p_1=\frac{62.4\text{ lb}}{\text{ft}^3}\left[210-\frac{(11.52)^2}{2(32.2)}+120.1\right]\frac{\text{ft}\cdot1\text{ ft}^2}{144\text{ in}^2}=\mathbf{142.1\ psi}$$

8.47 $\frac{p_0}{\gamma_w} + z_0 + \frac{\upsilon_0^2}{2g} + h_A = \frac{p_1}{\gamma_w} + z_1 + \frac{\upsilon_1^2}{2g}$

Pt. 0 at pump inlet.
Pt. 1 at pump outlet.
Assume $z_0 = z_1, \upsilon_0 = \upsilon_1$

$$h_A = \frac{p_1 - p_0}{\gamma_w} = \frac{[142.1 - (-2.36)]\text{lb}}{(62.4\ \text{lb/ft}^3)(\text{in}^2)(1\ \text{ft}^2/144\ \text{in}^2)}$$

$h_A = 333.5$ ft·lb/lb

$$P_A = h_A\gamma Q = \frac{333.5\ \text{ft}\cdot\text{lb}}{\text{lb}} \cdot \frac{62.4\ \text{lb}}{\text{ft}^3} \cdot \frac{4.00\ \text{ft}^3}{\text{s}} \cdot \frac{1\ \text{hp}}{550\ \text{ft}\cdot\text{lb/s}} = \mathbf{151\ hp}$$

8.48 $\frac{p_A}{\gamma_g} + z_A + \frac{\upsilon_A^2}{2g} - h_L = \frac{p_B}{\gamma} + z_B + \frac{\upsilon_B^2}{2g}$

$\upsilon = \frac{Q}{A} = \frac{4.25\ \text{ft}^3/\text{s}}{0.5479\ \text{ft}^2} = 7.76\ \text{ft/s}$
Assume sg = 0.68
μ From App. D.

$p_A = p_B + \gamma_g[(z_B - z_A) + h_L]$

$$N_R = \frac{\upsilon D\rho}{\mu} = \frac{(7.76)(0.8350)(1.32)}{7.2\times 10^{-6}} = 1.19 \times 10^6$$

$$\frac{D}{\varepsilon} = \frac{0.8350}{1.5\times 10^{-4}} = 5567:\ f = 0.0145$$

$$h_L = f\ \frac{L}{D}\frac{\upsilon^2}{2g} = 0.0145 \cdot \frac{3200}{0.8350} \times \frac{(7.76)^2}{2(32.2)} = 51.9\ \text{ft}$$

$$p_A = 40.0\ \text{psig} + \frac{42.4\ \text{lb}}{\text{ft}^3}[85 + 51.9]\frac{\text{ft}\cdot 1\ \text{ft}^2}{144\ \text{in}^2} = 80.3\ \text{psig}$$

8.49 $\frac{p_1}{\gamma_o} + z_1 + \frac{\upsilon_1^2}{2g} + h_A - h_L = \frac{p_2}{\gamma_o} + z_2 + \frac{\upsilon_2^2}{2g}$

Pt. 1 at tank surface. $p_1 = 0, \upsilon_1 = 0$
Pt. 2 in outlet stream from 3-in pipe. $p_2 = 0$
$Q = \frac{300\ \text{gal/min}\cdot 1\ \text{ft}^3/\text{s}}{449\ \text{gal/min}} = 0.668\ \text{ft}^3/\text{s}$
oil- App. C

$$h_A = (z_2 - z_1) + \frac{\upsilon_2^2}{2g} + h_L$$

$$\upsilon_4 = \frac{Q}{A_4} = \frac{0.668\ \text{ft}^3/\text{s}}{0.08840\ \text{ft}^2} = 7.56\ \text{ft/s}$$

$$\upsilon_3 = \frac{Q}{A_3} = \frac{0.668\ \text{ft}^3/\text{s}}{0.05132\ \text{ft}^2} = 13.02\ \text{ft/s} = \upsilon_2$$

$$h_L = h_{L_3} + h_{L_4} = f_3\frac{L_3}{D_3}\frac{\upsilon_3^2}{2g} + f_4\frac{L_4}{D_4}\frac{\upsilon_4^2}{2g}$$

$$N_{R_3} = \frac{\upsilon_3 D_3}{\nu} = \frac{(13.02)(0.2557)}{2.15\times 10^{-3}} = 1548\ \text{(Laminar)}: f_3 = \frac{64}{N_R} = 0.0413$$

$$N_{R_4} = \frac{\upsilon_4 D_4}{\nu} = \frac{(7.56)(0.3355)}{2.15\times 10^{-3}} = 1180\ \text{(Laminar)}: f_4 = \frac{64}{N_R} = 0.0543$$

$$h_L = 0.0413 \cdot \frac{75}{0.2557}\cdot\frac{(13.02)^2}{2(32.2)} + 0.0543\cdot\frac{25}{0.3355}\cdot\frac{(7.56)^2}{2(32.2)} = 35.5\ \text{ft}$$

$$h_A = 1.0\ \text{ft} + \frac{(13.02)^2}{2(32.2)}\ \text{ft} + 35.5\ \text{ft} = 39.1\ \text{ft}$$

$$P_A = h_A\gamma_o Q = (39.1\ \text{ft})(0.890)\frac{(62.4\ \text{lb})}{\text{ft}^3}\frac{(0.668\ \text{ft}^3)}{\text{s}}\frac{1\ \text{hp}}{550\ \text{ft}\cdot\text{lb/s}} = \mathbf{2.64\ hp}$$

8.50 $\frac{p_1}{\gamma_o} + z_1 + \frac{\upsilon_1^2}{2g} - h_L = \frac{p_2}{\gamma_o} + z_2 + \frac{\upsilon_2^2}{2g}$: $\upsilon_1 = \upsilon_2$

$p_1 - p_2 = \gamma_o[(z_2 - z_1) + h_L]$

$N_R = \frac{\upsilon D\rho}{\mu} = \frac{(3.65)(0.0189)(930)}{3.31\times 10^{-2}} = 1938$ (Laminar): $f = \frac{64}{N_R} = 0.0330$

$h_L = f\,\frac{L}{D}\frac{\upsilon^2}{2g} = (0.0330)\frac{17.5}{0.0189}\cdot\frac{(3.65)^2}{2(9.81)} = 20.76$ m

$p_1 - p_2 = 9.12$ kN/m^3[−1.88 m + 20.76 m] = **172 kPa**

8.51 $p_1 - p_2 = \gamma_g[(z_2 - z_1) + h_L]$ (From 9.24)

$N_R = \frac{\upsilon D\rho}{\mu} = \frac{(0.701)(0.0738)(1258)}{0.960}$

$N_R = 67.8$ (Laminar): $f = \frac{64}{N_R} = 0.944$

$h_L = f\,\frac{L}{D}\frac{\upsilon^2}{2g} = (0.944)\cdot\frac{25.8}{0.0738}\cdot\frac{(0.701)^2}{2(9.81)} = 8.27$ m

$p_1 - p_2 = 12.34$ kN/m^3[0.68 m + 8.27 m] = **110 kPa**

$Q = \frac{180\text{ L/min}\cdot 1\text{ m}^3\text{/s}}{60000\text{ L/min}} = 0.003\text{ m}^3\text{/s}$

$\upsilon = \frac{Q}{A} = \frac{0.003}{4.282\times 10^{-3}} = 0.701\text{ m/s}$

NOTE: For problems 8.52 through 8.62 the objective is to compute the value of the friction factor, f, from the Swamee-Jain equation (8-7) from Section 8.8, shown below:

$$f = \frac{0.25}{\left[\log\left(\frac{1}{3.7(D/\varepsilon)} + \frac{5.74}{N_R^{0.9}}\right)\right]^2} \qquad (8\text{–}7)$$

For each problem, the calculation of the Reynolds number and the relative roughness are shown followed by the result of the calculation for f.

8.52 Water at 75°C; $\nu = 3.83\times 10^{-7}$ m^2/s

$\upsilon = \frac{Q}{A} = \frac{12.9\text{ L/min}}{60000\text{ L/min}}\cdot\frac{1\text{ m}^3\text{/s}}{1.407\times 10^{-4}\text{ m}^2} = 1.528$ m/s

$N_R = \frac{\upsilon D}{\mu} = \frac{(1.528)(0.0134)}{3.83\times 10^{-7}} = 5.34\times 10^4$

$D/\varepsilon = 0.0134/1.5\times 10^{-6} = 8933$; $f =$ **0.0209**

8.53 Benzene at 60°C: $\rho = 0.88(1000) = 880$ kg/m^3; $\mu = 3.95\times 10^{-4}$ Pa·s

$\upsilon = \frac{Q}{A} = \frac{20\text{ L/min}}{60000\text{ L/min}}\cdot\frac{1\text{ m}^3\text{/s}}{4.636\times 10^{-4}\text{ m}^2} = 0.719$ m/s

$N_R = \frac{\upsilon D\rho}{\mu} = \frac{(0.719)(0.0243)(880)}{3.95\times 10^{-4}} = 3.89\times 10^4$

$D/\varepsilon = 0.0243/4.6\times 10^{-5} = 528$; $f =$ **0.0273**

8.54 Water at 80°F: $\nu = 9.15 \times 10^{-6}$ ft²/s

$D = 0.512$ ft; $A = 0.2056$ ft²

$$\upsilon = \frac{Q}{A} = \frac{2.50\ \text{ft}^3/\text{s}}{0.2056\ \text{ft}^2} = 12.16\ \text{ft/s}$$

$$N_R = \frac{\upsilon D}{\nu} = \frac{(12.16)(0.512)}{9.15\times10^{-6}} = 6.80 \times 10^5\text{:}\ \ D/\varepsilon = \frac{0.512}{4\times10^{-4}} = 1280$$

$f =$ **0.0191**

8.55 Water at 50°F: $\nu = 1.40 \times 10^{-5}$ ft²/s

$$D = 18\ \text{in}(1\ \text{ft}/12\ \text{in}) = 1.50\ \text{ft};\ A = \frac{\pi D^2}{4} = 1.767\ \text{ft}^2$$

$$\upsilon = \frac{Q}{A} = \frac{15.0\ \text{ft}^3/\text{s}}{1.767\ \text{ft}^2} = 8.49\ \text{ft/s}$$

$$N_R = \frac{\upsilon D}{\nu} = \frac{(8.49)(1.50)}{1.40\times10^{-5}} = 9.09 \times 10^5\text{:}\ \ D/\varepsilon = \frac{1.50}{4\times10^{-4}} = 3750$$

$f =$ **0.0155**

8.56 Water at 60°F: $\nu = 1.21 \times 10^{-5}$ ft²/s

$$\upsilon = \frac{Q}{A} = \frac{1500\ \text{gal/min}}{0.5479\ \text{ft}^2} \times \frac{1\ \text{ft}^3/\text{s}}{449\ \text{gal/min}} = 6.097\ \text{ft/s}$$

$$N_R = \frac{\upsilon D}{\nu} = \frac{(6.097)(0.835)}{1.21\times10^{-5}} = 4.21 \times 10^5\text{:}\ \ D/\varepsilon = \frac{0.835}{1.5\times10^{-4}} = 5567$$

$f =$ **0.0156**

8.57 $A = \pi D^2/4 = \pi(0.025)^2/4 = 4.909 \times 10^{-4}\ \text{m}^2$

$$\upsilon = \frac{Q}{A} = \frac{95\ \text{L/min}}{4.909\ \text{ft}^2 \times 10^{-4}\ \text{m}^2} \times \frac{1\ \text{m}^3/\text{s}}{60000\ \text{L/min}} = 3.23\ \text{m/s}$$

$$N_R = \frac{\upsilon D \rho}{\mu} = \frac{(3.23)(0.025)(1.10)(1000)}{2.0\times10^{-3}} = 4.44 \times 10^4\text{:}\ \ D/\varepsilon = \text{Smooth [Large } D/\varepsilon]$$

$f =$ **0.0213**

8.58 Crude oil (sg = 0.93) at 100°C

$\rho = (0.93)(1000\ \text{kg/m}^3) = 930\ \text{kg/m}^3$; $\mu = 7.8 \times 10^{-3}$ Pa·s

$$\upsilon = \frac{Q}{A} = \frac{1200\ \text{L/min}}{1.682\times10^{-2}\ \text{m}^2} \times \frac{1\ \text{m}^3/\text{s}}{60000\ \text{L/min}} = 1.19\ \text{m/s}$$

$$N_R = \frac{\upsilon D \rho}{\mu} = \frac{(1.19)(0.1463)(9.30)}{7.8\times10^{-3}} = 2.07 \times 10^4$$

$$D/\varepsilon = \frac{0.1463}{4.6 \times 10^{-5}} = 3180;\ \boldsymbol{f = 0.0264}$$

8.59 Water at 65°C; $\nu = 4.39 \times 10^{-7}$ m^2/s

$D = 0.0409$ m

$$N_R = \frac{\upsilon D}{\nu} = \frac{(10)(0.0409)}{4.39\times10^{-7}} = 9.32 \times 10^5$$

$$D/\varepsilon = \frac{0.0409}{4.6\times10^{-5}} = 889; \boldsymbol{f} = \mathbf{0.0206}$$

8.60 Propyl alcohol at 25°C; $\rho = 802$ kg/m^3

$\mu = 1.92 \times 10^{-3}$ Pa·s

$$\upsilon = \frac{Q}{A} = \frac{0.026\,\text{m}^3/\text{s}}{4.282\times10^{-3}\ \text{m}^2} = 6.07 \text{ m/s}$$

$$N_R = \frac{\upsilon D\rho}{\mu} = \frac{(6.07)(0.0738)(802)}{1.92\times10^{-3}} = 1.87 \times 10^5$$

$$D/\varepsilon = \frac{(0.0738)}{1.5\times10^{-6}} = 49200; \boldsymbol{f} = \mathbf{0.0159}$$

8.61 Water at 70°F; $\nu = 1.05 \times 10^{-5}$ ft^2/s

$$\upsilon = \frac{Q}{A} = \frac{3.0\ \text{ft}^3/\text{s}}{0.7854\ \text{ft}^2} = 3.82 \text{ ft/s}$$

$$N_R = \frac{\upsilon D}{\nu} = \frac{(3.82)(1.00)}{1.05\times10^{-5}} = 3.64 \times 10^5$$

$$D/\varepsilon = \frac{1.00}{4.0\times10^{-4}} = 2500; \boldsymbol{f} = \mathbf{0.0175}$$

8.62 Heavy fuel oil at 77°F; $\rho = 1.76$ slugs/ft^3

$\mu = 2.24 \times 10^{-3}$ lb·s/ft^2

$\upsilon = 12$ ft/s; $D = 0.5054$ ft

$$N_R = \frac{\upsilon D\rho}{\mu} = \frac{(12.0)(0.5054)(1.76)}{2.24\times10^{-3}} = 4.77 \times 10^3$$

$$D/\varepsilon = \frac{0.5054}{1.5\times10^{-4}} = 3369; \boldsymbol{f} = \mathbf{0.0388}$$

Hazen-Williams Formula

8.63 $Q = 1.5$ ft^3/s, $L = 550$ ft, $D = 0.5/2$ ft, $A = 0.2056$ ft^2

$R = D/4 = 0.128$ ft, $C_h = 140$

$$h_L = L\left[\frac{Q}{1.32AC_hR^{0.63}}\right]^{1.852}$$

$$h_L = 550\left[\frac{1.50}{(1.32)(0.2056)(140)(0.128)^{0.63}}\right]^{1.852} = \mathbf{15.22\ ft}$$

8.64 $Q = 1000 \text{ L/min} \times \dfrac{1 \text{ m}^3/\text{s}}{60000 \text{ L/min}} = 0.0167 \text{ m}^3/\text{s}$; $L = 45$ m

4-in type K copper tube; $D = 97.97$ mm $= 0.09797$ m, $A = 7.538 \times 10^{-3}$ m^2

$R = D/4 = 0.0245$ m, $C_h = 130$

$$h_L = L\left[\frac{Q}{0.85AC_hR^{0.63}}\right]^{1.852}$$

$$= 45\left[\frac{0.0167}{0.85(7.538\times10^{-3})(130)(0.0245)^{0.63}}\right]^{1.852}$$

$h_L =$ **2.436 m**

8.65 $Q = 7.50$ ft^3/s; $L = 5280$ ft, $D = 18$ in $= 1.50$ ft, $A = 1.767$ ft^2

$R = D/4 = 0.375$ ft; $C_h = 100$

$$h_L = 5280\left[\frac{7.50}{(1.32)(1.767)(100)(0.375)^{0.63}}\right]^{1.852} = \mathbf{28.51\ ft}$$

8.66 $Q = 1500 \text{ gal/min} \times \dfrac{1 \text{ ft}^3/\text{s}}{449 \text{ gal/min}} = 3.341 \text{ ft}^3/\text{s}$; $L = 1500$ ft

$D = 10.02$ in $= 0.835$ ft; $A = 0.5479$ ft^2

$C_h = 100$; $R = D/4 = 0.2088$

$$h_L = 1500\left[\frac{3.341}{(1.32)(0.5479)(100)(0.2088)^{0.63}}\right]^{1.852}$$

$h_L =$ **31.38 ft**

8.67 $Q = 900 \text{ L/min} \times \dfrac{1 \text{ m}^3/\text{s}}{60000 \text{ L/min}} = 0.015 \text{ m}^3/\text{s}$; $L = 80$ m

$D = 97.97$ mm $= 0.09797$ m; $A = 7.538 \times 10^{-3}$ m^2

$R = D/4 = 0.0245$ m; $C_h = 130$

$$h_L = 80\left[\frac{0.015}{(0.85)(7.538\times10^{-3})(130)(0.0245)^{0.63}}\right]^{1.852} = \mathbf{3.56\ m}$$

8.68 $Q = 0.20$ ft^3/s; $D = 2.469$ in $= 0.2058$ ft; $A = 0.03326$ ft^2

$C_h = 100$; $R = D/4 = 0.0515$ ft

$\upsilon = Q/A = 6.01$ ft/s (OK)

$$h_L = 80\left[\frac{0.20}{(1.32)(0.03326)(100)(0.0515)^{0.63}}\right]^{1.852} = \mathbf{8.35\ ft}$$

8.69 $Q = 2.0\ \text{ft}^3/\text{s};\ L = 2500\ \text{ft}$

a) 8-in Schedule 40 steel pipe; $D = 0.6651$ ft; $A = 0.3472\ \text{ft}^2$
$R = D/4 = 0.1663$ ft; $C_h = 100$

$$h_L = 2500\left[\frac{2.0}{(1.32)(0.3472)(100)(0.1663)^{0.63}}\right]^{1.852} = \mathbf{61.4\ ft}$$

b) Cement lined 8-in ductile iron pipe
$D = 8.23$ in $= 0.686$ ft; $A = 0.3694\ \text{ft}^2$; $C_h = 140$
$R = D/4 = 0.1715$ ft

$$h_L = 2500\left[\frac{2.0}{(1.32)(0.3694)(140)(0.1715)^{0.63}}\right]^{1.852} = \mathbf{28.3\ ft}$$

8.70 Specify a new Schedule 40 steel pipe size. Use $C_h = 130$

$$Q = 300\ \text{gal/min} \times \frac{1\ \text{ft}^3/\text{s}}{449\ \text{gal/min}} = 0.668\ \text{ft}^3/\text{s}$$

$s = 10\ \text{ft}/1200\ \text{ft} = 0.00833\ \text{ft/ft}$

$$D = \left[\frac{2.31(0.668)}{(130)(0.00833)^{0.54}}\right]^{0.380} = 0.495\ \text{ft}$$

6-in Schedule 40 steel pipe; *D* = 0.5054 ft

Actual h_L for 6-in pipe

$D = 0.5054$ ft; $R = D/4 = 0.1264$ ft
$A = 0.2006\ \text{ft}^2$

$$h_L = L\left[\frac{Q}{1.32AC_hR^{0.63}}\right]^{1.852}$$

$$h_L = 1200\left[\frac{0.668}{(1.32)(0.2006)(130)(0.1264)^{0.63}}\right]^{1.852} = \mathbf{9.05\ ft}$$

8.71 **From 8.70**
$Q = 0.668\ \text{ft}^3/\text{s}$
$D = 0.5054$ ft $= 6.065$ in; $A = 0.2006\ \text{ft}^2$
$R = D/4 = 0.1264$ ft; $C_h = 100$

$$h_L = 1200\left[\frac{0.668}{1.32(0.2006)(100)(0.1264)^{0.63}}\right]^{1.852}$$

$h_L = \mathbf{14.72\ ft}$

8.72 $Q = 100$ gal/min × 1 ft^3/s/449 gal/min = 0.2227 ft^3/s
$L = 1000$ ft; $C_h = 130$ (New steel)

a) 2-in pipe: $D = 2.067$ in = 0.1723 ft; $A = 0.02333$ ft^2
$R = D/4 = 0.0431$ ft

$$h_L = 1000\text{ ft}\left[\frac{0.2227}{(1.32)(0.02333)(130)(0.0431)^{0.63}}\right]^{1.852}$$

$h_L =$ **186 ft**

b) 3-in pipe; $D = 3.068$ in = 0.2557 ft; $A = 0.05132$ ft^2
$R = D/4 = 0.0639$ ft

$$h_L = 1000\left[\frac{0.2227}{(1.32)(0.05132)(130)(0.0639)^{0.63}}\right]^{1.852}$$

$h_L =$ **27.27 ft**

CHAPTER NINE

VELOCITY PROFILES FOR CIRCULAR SECTIONS AND FLOW IN NONCIRCULAR SECTIONS

9.1 Local velocity: $U = 2\text{v}[1 - (r/r_o)^2]$ for laminar flow
2-in Sch 40 steel pipe; $D = 2.067$ in $= 0.1723$ ft; $r_o = D/2 = 1.034$ in; $A = 0.02333$ ft^2
$\text{v} = Q/A = 0.25$ ft^3/s/0.02333 ft^2 = 10.72 ft/s
$N_R = \text{v}D\rho/\eta = \text{v}D/\nu = (10.72)(0.1723)/7.31 \times 10^{-3} = 253$ Laminar
See spreadsheet listing for results for U as a function of radius.

9.2 Local velocity: $U = 2\text{v}[1 - (r/r_o)^2]$; $Q = 0.50$ gal/min $= 0.001113$ ft^3/s
3/4-in Type K copper tube; $D = 0.745$ in $= 0.0621$ ft; $r_o = D/2 = 0.373$ in;
$A = 0.02333$ ft^2; $\text{v} = Q/A = 0.001113$ ft^3/s/0.003027 ft^2 = 0.3679 ft/s
$N_R = \text{v}D\rho/\eta = \text{v}D/\nu = (0.3679)(0.0621)/1.21 \times 10^{-5} = 1888$ Laminar
See spreadsheet listing for results for U as a function of radius.

Problem 9.1		***Problem 9.2***	
Average velocity	10.72 ft/s	Average velocity	0.3679 ft/s
Full radius	1.0338 in	Full radius	0.3725 in
Radius (in)	***Velocity, U***	***Radius (in)***	***Velocity, U***
0.00	21.44 ft/s	0.00	0.7358 ft/s
0.20	20.64 ft/s	0.05	0.7225 ft/s
0.40	18.23 ft/s	0.10	0.6828 ft/s
0.60	14.22 ft/s	0.15	0.6165 ft/s
0.80	8.60 ft/s	0.20	0.5237 ft/s
1.00	1.38 ft/s	0.25	0.4044 ft/s
1.0338	0.00 ft/s	0.30	0.2585 ft/s
		0.35	0.0862 ft/s
		0.3725	0.0000 ft/s

9.3 Local velocity: $U = 2\text{v}[1 - (r/r_o)^2]$; $Q = 3.0$ L/min $= 5.0 \times 10^{-5}$ m^3/s
4-in Type K copper tube; $D = 97.97$ mm $= 0.09797$ m; $r_o = D/2 = 48.99$ mm
$A = 7.538 \times 10^{-3}$ m^2; $\text{v} = Q/A = 5.0 \times 10^{-5}$ m^3/s/7.538 $\times 10^{-3}$ m^2 = 6.633 $\times 10^{-3}$ m/s
$N_R = \text{v}D\rho/\eta = \text{v}D/\nu = (6.663 \times 10^{-3})(0.09797)/4.22 \times 10^{-7} = 1540$ Laminar
See spreadsheet listing for results for U as a function of radius.

9.4 Local velocity: $U = 2\text{v}[1 - (r/r_o)^2]$; $Q = 25.0$ L/min $= 4.167 \times 10^{-4}$ m^3/s
2-in drawn steel tube; $D = 47.50$ mm $= 0.00475$ m; $r_o = D/2 = 23.75$ mm
$A = 1.772 \times 10^{-3}$ m^2; $\text{v} = Q/A = 4.167 \times 10^{-4}$ m^3/s/1.772 $\times 10^{-3}$ m^2 = 0.2352 m/s
$N_R = \text{v}D\rho/\eta = \text{v}D/\nu = (0.2352)(0.0475)/7.9 \times 10^{-3} = 1258$ Laminar
See spreadsheet listing for results for U as a function of radius.

Problem 9.3	
Average velocity	6.63E-03 m/s
Full radius	48.985 mm
Radius (in)	***Velocity, U***
0.00	0.01327 m/s
8.00	0.01291 m/s
16.00	0.01185 m/s
24.00	0.01008 m/s
32.00	0.00760 m/s
40.00	0.00442 m/s
48.00	0.00053 m/s
48.99	0.00000 m/s

Problem 9.4	
Average velocity	0.2352 m/s
Full radius	23.75 mm
Radius (mm)	***Velocity, U***
0.000	0.470 m/s
4.00	0.457 m/s
8.00	0.417 m/s
12.00	0.350 m/s
16.00	0.257 m/s
20.00	0.137 m/s
23.75	0.000 m/s

9.5 (See Section 9.4) U = Local Velocity

$$U = 2\upsilon\left[1-(r/r_o)^2\right]$$

If U = υ = average velocity

$$\upsilon = 2\upsilon\left[1-(r/r_o)^2\right]$$

$$\frac{1}{2} = 1-(r/r_o)^2$$

$$(r/r_o)^2 = 0.5$$

$r = \sqrt{0.5}\ r_o = 0.707\ r_o = 0.707(73.15\ \text{mm})$
$= 51.72$ mm

$d = (r_o - r) + t = (73.15 - 51.72) + 10.97 =$ **32.40 mm**

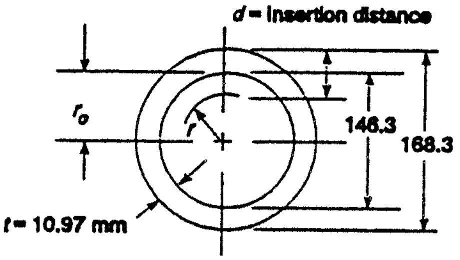

$r_o = D/2 = 73.15$ mm
6-in Schedule 80 pipe

9.6 If probe is inserted 5.0 mm too far:

$r = 51.72\ \text{mm} - 5.0\ \text{mm} = 46.72$ mm
$r/r_o = 46.72/73.15 = 0.6387$
$U = 2\upsilon[1-(0.6387)^2] =$ **1.184 υ 18.4% high**

If probe is inserted 5.0 mm too little:

$r = 51.72\ \text{mm} + 5.0\ \text{mm} = 56.72$ mm
$r/r_o = 56.72/73.15 = 0.7754$
$U = 2\upsilon[1-(0.7754)^2] =$ **0.798 υ 20.2% low**

9.7 Center of pipe is $D_o/2$ from outside surface

$$\frac{D_o}{2} = \frac{168.3\ \text{mm}}{2} = 84.15\ \text{mm; at this position, } r = 0,\ U = 2\upsilon$$

With $r = 5.0$ mm, $r/r_o = 5.0/73.15 = 0.06835$

$$U = 2\upsilon\left[1-(r/r_o)^2\right] = 2\upsilon[1-(0.06835)^2] = 1.9907\ u$$

If υ is expected to be $U/2$,

$$\frac{U}{2} = \frac{1.9907\,\upsilon}{2} = \mathbf{0.9953\ \upsilon} \quad \mathbf{0.47\%\ low}$$

9.8 $U = 2.48$ m/s; $d = 60.0$ mm (See Prob. 8.27)

$d = r_o - r + t$; $r = r_o + t - d = 73.15 + 10.97 - 60.0 = 24.12$ mm

$r/r_o = 24.12/73.15 = 0.3297$

$U = 2\upsilon\left[1-(r/r_o)^2\right] = 2\upsilon[1 - (0.3297)^2] = 1.783\ \upsilon$

$$\upsilon = \frac{U}{1.783} = \frac{2.48\text{ m/s}}{1.783} = \textbf{1.39 m/s average velocity}$$

$\nu = 850\text{ cs} \times 1.0 \times 10^{-6}\text{ m}^2\text{/s/cs} = 8.50 \times 10^{-4}\text{ m}^2\text{/s}$

$$N_R = \frac{\upsilon D}{\nu} = \frac{(1.39)(0.1463)}{8.50\times10^{-4}} = \textbf{239}\quad \textbf{Laminar OK}$$

Velocity profile for turbulent flow

9.9 $$\upsilon = \frac{Q}{A} = \frac{12.9\text{ L/min}}{1.407\times10^{-4}\text{ m}^2}\times\frac{1\text{ m}^3\text{/s}}{60000\text{ L/min}} = 1.53\text{ m/s}$$

$$N_R = \frac{\upsilon D}{\nu} = \frac{(1.53)(0.0134)}{3.83\times10^{-7}} = 5.35 \times 10^4$$

$$\frac{D}{\varepsilon} = \frac{0.0134}{1.5\times10^{-6}} = 8933; f = 0.0205$$

$$U_{max} = \upsilon\left(1 + 1.43\sqrt{f}\right) = 1.53\left(1 + 1.43\sqrt{.0205}\right) = \textbf{1.84 m/s}$$

9.10 SAE 10 oil: sg = 0.87; ρ = 0.87(1000) = 870 kg/m^3

$\mu = 2.20 \times 10^{-2}$ Pa·s (App. D) at 40°C

$$\upsilon = \frac{N_R\mu}{D\rho} = \frac{(3.60\times10^4)(2.20\times10^{-2})}{(1.20)(870)} = 0.759\text{ m/s}$$

$$Q = A\upsilon = \frac{\pi(1.20\text{ m})^2}{4}\times 0.759\text{ m/s} = \textbf{0.858 m}^3\textbf{/s}$$

$$\frac{D}{\varepsilon} = \frac{1.20}{4.6\times10^{-5}} = 26000; f = 0.0222$$

$$U_{max} = \upsilon\left(1+1.43\sqrt{f}\right) = 0.759\left(1+1.43\sqrt{0.0222}\right) = \textbf{0.920 m/s}$$

At other points: $U = \upsilon\left[1+1.43\sqrt{f}+2.15\sqrt{f}\log_{10}(y/r_o)\right]$

$U = 0.759\text{ m/s}\left[1+1.43\sqrt{0.0222}+2.15\sqrt{0.0222}\log_{10}(y/r_o)\right]$

$U = 0.759\left[1.213+0.320\log_{10}(y/r_o)\right]$ m/s

$r_o = D/2 = 1200\text{ mm}/2 = 600$ mm

y(mm)	y/r_o	U(m/s)	
0	0	0	0
10	0.0167	0.488	0.530
20	0.0333	0.561	0.592
30	0.050	0.604	0.628
40	0.0667	0.634	0.654
50	0.0833	0.658	0.674
100	0.1667	0.731	0.735
300	0.50	0.847	0.833
500	0.833	0.901	0.879
600	1.00	0.920	0.895
		Prob. 9.10	Prob. 9.11

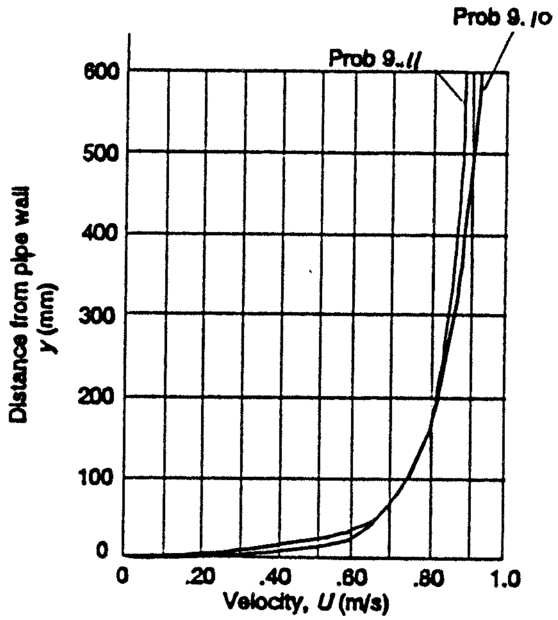

9.11 Oil at 100°C: $\mu = 4.2 \times 10^{-3}$ Pa·s

$$N_R = \frac{\upsilon D\rho}{\mu} = \frac{(0.759)(1.20)(870)}{4.20\times10^{-3}} = 1.89 \times 10^5; f = 0.0158$$

$$U_{max} = \upsilon\left[1+1.43\sqrt{f}\right] = 0.759\left[1+1.43\sqrt{0.0158}\right] = \mathbf{0.895\ m/s}$$

$$U = 0.759\left[1+1.43\sqrt{0.0158}+2.15\sqrt{0.0158}\log_{10}(y/r_o)\right]$$

$$U = 0.759\left[1.180+0.270\log_{10}(y/r_o)\right]$$

Results included with Prob. 9.10.

The lower friction factor for the hot oil results in a 3% lower maximum velocity. But the velocity in the boundary layer (y < 100 mm) is slightly higher.

9.12 $U = \upsilon\left[1+1.43\sqrt{f}+2.15\sqrt{f}\log_{10}(y/r_o)\right]$

Let $U = \upsilon$, divide both sides by υ

$1 = 1+1.43\sqrt{f}+2.15\sqrt{f}\log_{10}(y/r_o)$

Subtract 1.0 from both sides

$0 = 1.43\sqrt{f}+2.15\sqrt{f}\log_{10}(y/r_o)$

Divide by $\sqrt{f}$

$0 = 1.43+2.15\log_{10}(y/r_o)$

$\log_{10}(y/r_o) = \frac{-1.43}{2.15} = -0.665$

$y/r_o = 10^{-0.665} = 0.216$ **or** $\boldsymbol{y = 0.216\ r_o}$

9.13 $y = 0.216\,r_o = 0.216(D/2) = 0.216(22.626 \text{ in}/2) = 2.44$ in

$$\upsilon_{avg} = \frac{Q}{A} = \frac{16.75\ \text{ft}^3/\text{s}}{2.792\ \text{ft}^2} = \mathbf{6.00\ ft/s} \text{ at } y = 2.44 \text{ in}$$

At $y_1 = 2.44$ in + 0.50 in = 2.94 in; $y/r_o = 2.94/11.313 = 0.260$

At $y_2 = 2.44$ in - 0.50 in = 1.94 in; $y/r_o = 1.94/11.313 = 0.172$

$$N_R = \frac{\upsilon D}{\nu} = \frac{(6.00)(1.886)}{1.40\times10^{-5}} = 8.08\times10^5 : \frac{D}{\varepsilon} = \frac{1.886}{1.5\times10^{-4}} = 12570;$$

$f = 0.0137$

$$U_1 = 6.00 \text{ ft/s}\left[1 + 1.43\sqrt{0.0137} + 2.15\sqrt{0.0137}\log_{10}(0.260)\right]$$

$U_1 = \mathbf{6.12\ ft/s}$ (2.0% higher than υ_{avg})

$$U_2 = 6.00\left[1 + 1.43\sqrt{0.0137} + 2.15\sqrt{0.0137}\log_{10}(0.172)\right]$$

$U_2 = \mathbf{5.85\ ft/s}$ (2.50% lower than υ_{avg})

9.14 $U_{max} = \upsilon\left(1 + 1.43\sqrt{f}\right)$: $\upsilon/U_{max} = 1/\left(1 + 1.43\sqrt{f}\right)$

Smooth pipes

N_R	f	υ/U_{max}
4×10^3	0.040	0.778
1×10^4	0.031	0.799
1×10^5	0.0175	0.841
1×10^6	0.0118	0.866

9.15 $U_{max} = \upsilon\left(1 + 1.43\sqrt{f}\right)$: $\upsilon/U_{max} = 1/\left(1 + 1.43\sqrt{f}\right)$

Concrete pipe: $D = (8/12)$ ft = 0.667 ft; $D/\varepsilon = 0.667/4 \times 10^{-4} = 1670$

N_R	f	υ/U_{max}
4×10^3	0.041	0.775
1×10^4	0.032	0.796
1×10^5	0.021	0.828
1×10^6	0.0185	0.837

9.16 $$\upsilon = \frac{Q}{A} = \frac{400\ \text{gal/min}}{0.0884\ \text{ft}^2} \times \frac{1\ \text{ft}^3/\text{s}}{449\ \text{gal/min}} = 10.08 \text{ ft/s}$$

$$N_R = \frac{\upsilon D}{\nu} = \frac{(10.08)(0.3355)}{1.40\times10^{-5}} = 2.42 \times 10^5; \ \frac{D}{\varepsilon} = \frac{0.3355}{1.5\times10^{-4}} = 2237; \ f = 0.0182$$

$$U = \upsilon\left(1 + 1.43\sqrt{0.0182} + 2.15\sqrt{0.0182}\log_{10}\left(y/r_o\right)\right]$$

$$U = 10.08\left[1.193 + 0.290\log_{10}\left(y/r_o\right)\right]$$

$r_o = D/2 = 4.026$ in/2 = 2.013 in

y(in)	y/r_o	U(ft/s)	U (Prob. 9.17)
0	0	0	0
0.05	0.025	7.33	5.83
0.10	0.050	8.21	7.19
0.15	0.075	8.72	7.98
0.20	0.099	9.09	8.55
0.50	0.248	10.25	10.35
1.00	0.497	11.13	11.71
1.50	0.745	11.65	12.51
2.013	1.000	12.02	13.09

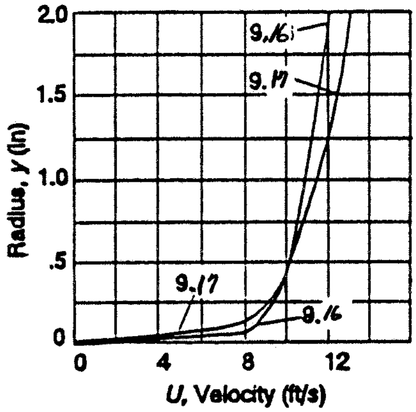

9.17 $\frac{D}{\varepsilon} = \frac{0.3355}{5.0 \times 10^{-3}} = 67.1$; $N_R = 2.42 \times 10^5$; $f = 0.0436$

$$U = 10.08\left[1 + 1.43\sqrt{0.0436} + 2.15\sqrt{0.0436}\log_{10}\left(y/r_o\right)\right]$$

$U = 10.08\left[1.299 + 0.449 \log_{10}\left(y/r_o\right)\right]$ (See results for 9.16)

9.18 $\Delta p = \gamma h_L$

Prob. 9.16: $h_L = f\frac{L}{D}\frac{\upsilon^2}{2g} = \frac{(0.0182)(250)(10.08)^2}{(0.3355)(2)(32.2)} = 21.39$ ft

$\Delta p = (62.4\text{ lb/ft}^3)(21.39\text{ ft})(1\text{ ft}^2/144\text{ in}^2) = $ **9.27 psi**

Prob. 9.17: $h_L = \frac{(0.0436)(250)(10.08)^2}{(0.3355)(2)(32.2)} = 51.24$ ft

$\Delta p = \gamma h_L = (62.4)(51.24)/144 = $ **22.2 psi**

9.19 $Q_s = A_s\upsilon_s$; $Q_t = A_t\upsilon_t$; But $\upsilon_s = \upsilon_t$ specified

$$\frac{Q_s}{Q_t} = \frac{A_s\upsilon_s}{A_t\upsilon_t} = \frac{A_s}{A_t}$$

$A_t = 8.189 \times 10^{-5}$ m^2

$A_s = 3.059 \times 10^{-4}$ m$^2 - \pi(0.0127\text{m})^2/4 = 1.792 \times 10^{-4}$ m^2

$$\frac{Q_s}{Q_t} = \frac{A_s}{A_t} = \frac{1.792 \times 10^{-4}}{8.189 \times 10^{-5}} = \mathbf{2.19}$$

9.20 $\upsilon_{\text{pipe}} = \frac{Q}{A} = \frac{450\text{ L/min}}{1.864 \times 10^{-2}\text{ m}^2} \times \frac{1\text{ m}^3/\text{s}}{60000\text{ L/min}} = $ **0.402 m/s**

$Q_{\text{duct}} = A_D\upsilon_D = (0.0355\text{ m}^2)(0.402\text{ m/s}) = 0.0143\text{ m}^3/\text{s} \times \frac{60000\text{ L/min}}{1\text{ m}^3/\text{s}}$

$A_D = (0.40\text{ m})(0.20\text{ m}) - 2(\pi)(0.1683\text{ m})^2/4 = 0.0355\text{ m}^2$

$\mathbf{Q_{\text{duct}}}$ **= 857 L/min**

9.21 $Q_T = A_T \upsilon = (0.01414\text{ ft}^2)(25\text{ ft/s}) = \mathbf{0.3535\ ft^3/s}$

$Q_S = A_S \upsilon = (0.0799\text{ ft}^2)(25\text{ ft/s}) = \mathbf{1.998\ ft^3/s}$

$$A_S = 0.1390\text{ ft}^2 - \frac{3\pi(1.900\text{ in})^2}{4} \times \frac{\text{ft}^2}{144\text{ in}^2} = 0.0799\text{ ft}^2$$

Noncircular cross sections

9.22 $A = (0.05\text{ m})^2 + (0.5)(0.05\text{ m})^2 - \pi(0.025\text{ m})^2/4 = 3.259 \times 10^{-3}\text{ m}^2$

$WP = 0.05 + 0.05 + 0.10 + \sqrt{.05^2 + .05^2} + \pi(0.025) = 0.3493\text{ m}$

$$R = \frac{A}{WP} = \frac{3.259 \times 10^{-3}\text{m}^2}{0.3493\text{ m}} = 9.33 \times 10^{-3}\text{ m}$$

$$\upsilon = \frac{Q}{A} = \frac{150\text{ m}^3}{\text{hr}} \times \frac{1\text{ hr}}{3600\text{ s}} \times \frac{1}{3.259 \times 10^{-3}\text{m}^2} = 12.78\text{ m/s}$$

$$\rho = \frac{\gamma}{g} = \frac{12.5\text{ N}\cdot\text{s}^2}{\text{m}^3 9.81\text{ m}} \times \frac{1\text{ kg}\cdot\text{m/s}^2}{\text{in}} = 1.274\text{ kg/m}^3$$

$$N_R = \frac{\upsilon(4R)\rho}{\mu} = \frac{(12.78)(4)(9.33 \times 10^{-3})(1.274)}{2.0 \times 10^{-5}} = \mathbf{3.04 \times 10^4}$$

9.23 $A = (12\text{ in})(6\text{ in}) - 2\pi(4.0\text{ in})^2/4 = 46.87\text{ in}^2(1\text{ ft}^2/144\text{ in}^2) = 0.3255\text{ ft}^2$

$WP = 2(6\text{ in}) + 2(12\text{ in}) + 2\pi(4.0\text{ in}) = 61.13\text{ in}(1\text{ ft}/12\text{ in}) = 5.094\text{ ft}$

$$R = \frac{A}{WP} = \frac{0.3255\text{ ft}^2}{5.094\text{ ft}} = 0.0639\text{ ft}$$

$$\upsilon = \frac{Q}{A} = \frac{200\text{ ft}^3}{\text{min}} \times \frac{1\text{ min}}{60\text{ s}} \times \frac{1}{0.3255\text{ ft}^2} = 10.24\text{ ft/s}$$

$$\rho = \frac{\gamma}{g} = \frac{0.114\text{ lb}\cdot\text{s}^2}{\text{ft}^3(32.2\text{ ft})} \times \frac{1\text{ slug}}{1\text{ lb}\cdot\text{s}^2/\text{ft}} = 0.00354\text{ slugs/ft}^3$$

$$N_R = \frac{\upsilon(4R)\rho}{\mu} = \frac{(10.24)(4)(0.0639)(0.00354)}{3.34 \times 10^{-7}} = \mathbf{2.77 \times 10^4}$$

9.24 $A = (10\text{ in})^2 - \pi(6.625\text{ in})^2/4 = 65.53\text{ in}^2(1\text{ ft}^2/144\text{ in}^2) = 0.455\text{ ft}^2$

$WP = 4(10\text{ in}) + \pi(6.625\text{ in}) = 60.81\text{ in}(1\text{ ft}/12\text{ in}) = 5.067\text{ ft}$

$R = A/WP = 0.455\text{ ft}^2/5.067\text{ ft} = 0.0898\text{ ft}$

$$\upsilon = \frac{Q}{A} = \frac{4.00\text{ ft}^3/\text{s}}{0.455\text{ ft}^2} = 8.79\text{ ft/s}$$

$$N_R = \frac{\upsilon 4R}{\nu} = \frac{(8.79)(4)(0.0898)}{8.29 \times 10^{-6}} = 3.808 \times 10^5$$

9.25 **Tube**: $D = 10.21\text{ mm} = 0.01021\text{ m}$; $A = 8.189 \times 10^{-5}\text{ m}^2$

$$Q = 4.75\text{ gal/min} \times \frac{6.309 \times 10^{-5}\text{ m}^3/\text{s}}{1\text{ gal/min}} = 3.00 \times 10^{-4}\text{ m}^3/\text{s}$$

$$\upsilon = \frac{Q}{A} = \frac{3.00 \times 10^{-4}\text{ m}^3/\text{s}}{8.189 \times 10^{-5}\text{ m}^2} = 3.66\text{ m/s}$$

$$N_R = \frac{\upsilon D}{\nu} = \frac{(3.66)(0.01021)}{3.04 \times 10^{-7}} = \mathbf{1.23 \times 10^5}$$

Shell: $A = 3.059 \times 10^{-4}\ \text{m}^2 - \pi(0.0127\ \text{m})^2/4 = 1.792 \times 10^{-4}\ \text{m}^2$

$WP = \pi(0.01974\ \text{m}) + \pi(0.0127\ \text{m}) = 0.1019\ \text{m}$

$R = A/WP = 0.00176\ \text{m} = 1.76 \times 10^{-3}\ \text{m}$

$$Q = 30.0\ \text{gal/min} \times \frac{6.309\times10^{-5}\ \text{m}^3/\text{s}}{1\ \text{gal/min}} = 1.89 \times 10^{-3}\ \text{m}^3/\text{s}$$

$$\upsilon = \frac{Q}{A} = \frac{1.89\times10^{-3}\ \text{m}^3/\text{s}}{1.792\times10^{-4}\ \text{m}^2} = 10.56\ \text{m/s}$$

$$N_R = \frac{\upsilon(4R)(\rho)}{\mu} = \frac{(10.56)(4)(1.76\times10^{-3})(1100)}{1.62\times10^{-2}} = 5.049 \times 10^3 = \mathbf{5049}\ \text{Turbulent}$$

9.26 **Pipe**: $Q = \dfrac{450\ \text{L/min} \times 1\ \text{m}^3/\text{s}}{60000\ \text{L/min}} = 0.00750\ \text{m}^3/\text{s}$

$$\upsilon = \frac{Q}{A} = \frac{0.00750\ \text{m}^3/\text{s}}{1.864\times10^{-2}\ \text{m}^2} = 0.402\ \text{m/s}$$

$$N_R = \frac{\upsilon D}{\nu} = \frac{(0.402)(0.1541)}{1.02\times10^{-6}} = 6.08\times10^4$$

(Water at 20°C)

Duct: Benzene at 70°C: $\rho = sg(\rho_w) = 0.862(1000) = 862\ \text{kg/m}^3$

$\mu = 3.5 \times 10^{-4}\ \text{Pa·s}$ (App. D)

$A = (0.40\ \text{m})(0.20\ \text{m}) - 2(\pi)(0.1683\ \text{m})^2/4 = 0.0355\ \text{m}^2$

$WP = 2(0.40) + 2(0.20) + 2(\pi)(0.1683) = 2.257\ \text{m}$

$$R = \frac{A}{WP} = \frac{0.0355\ \text{m}^2}{2.257\ \text{m}} = 0.0157\ \text{m}$$

$$N_R = \frac{\upsilon(4R)(\rho)}{\mu};\ \upsilon = \frac{N_R\mu}{4R\rho} = \frac{(6.08\times10^4)(3.5\times10^{-4})}{4(0.0157)(862)} = 0.392\ \text{m/s}$$

$Q = A\upsilon = (0.0355\ \text{m}^2)(0.392\ \text{m/s}) = \mathbf{1.39 \times 10^{-2}\ m^3/s}$

9.27 **Inside Pipes:** $N_R = \dfrac{\upsilon D}{\nu} = \dfrac{(25)(0.1342)}{3.35\times10^{-6}} = \mathbf{1.00 \times 10^6}$

Shell: $A = 0.1390\ \text{ft}^2 - 3(\pi)(0.1583\ \text{ft})^2/4 = 0.0799\ \text{ft}^2$

$D_o = 1.900\ \text{in}(1\ \text{ft}/12\ \text{in}) = 0.1583\ \text{ft}$ = Outside dia. of $1\frac{1}{2}$ 1 in pipe.

$WP = \pi(0.4206\ \text{ft}) + 3\pi(0.1583\ \text{ft}) = 2.813\ \text{ft}$

$$R = \frac{A}{WP} = \frac{0.0799\ \text{ft}^2}{2.813\ \text{ft}} = 0.0284\ \text{ft}$$

$$N_R = \frac{\upsilon(4R)}{\nu} = \frac{(25)(4)(0.0284)}{1.21\times10^{-5}} = \mathbf{2.35 \times 10^5}$$

9.28 $Q = 850 \text{ L/min} \times \dfrac{1 \text{ m}^3/\text{s}}{60000 \text{ L/min}} = 0.01417 \text{ m}^3/\text{s}$

$A = A_{\text{shell}} - 3A_{\text{tube-D}_o} = 1.945 \times 10^{-3} \text{ m}^2 - 3\pi(0.0127 \text{ m})^2/4 = 1.565 \times 10^{-3} \text{ m}^2$

$WP = \pi(0.04976 \text{ m}) + 3\pi(0.0127 \text{ m}) = 0.2760 \text{ m}$

$$R = \frac{A}{WP} = \frac{1.565 \times 10^{-3} \text{ m}^2}{0.2760 \text{ m}} = 5.670 \times 10^{-3} \text{ m}$$

$$\upsilon = \frac{Q}{A} = \frac{0.01417 \text{ m}^3/\text{s}}{1.565 \times 10^{-3} \text{ m}^2} = 9.05 \text{ m/s}$$

$$N_R = \frac{\upsilon 4R}{\nu} = \frac{(9.05)(4)(5.670 \times 10^{-3})}{1.30 \times 10^{-6}} = \mathbf{1.58 \times 10^5}$$

9.29 $A = (0.25 \text{ in})(1.75 \text{ in}) + 4(0.25 \text{ in})(0.50 \text{ in}) = 0.9375 \text{ in}^2(1 \text{ ft}^2/144 \text{ in}^2) = 0.00651 \text{ ft}^2$

$WP = (1.75 \text{ in}) + 7(0.25 \text{ in}) + 2(0.75 \text{ in}) + 6(0.50 \text{ in})$

$WP = 8.00 \text{ in}(1 \text{ ft}/12 \text{ in}) = 0.667 \text{ ft}$

$R = A/WP = 0.00651 \text{ ft}^2/0.667 \text{ ft} = 9.77 \times 10^{-3} \text{ ft}$

$$N_R = \frac{\upsilon 4R\rho}{\mu}; \ \upsilon = \frac{N_R \mu}{4R\rho} = \frac{(1500)(3.38 \times 10^{-4})}{4(9.77 \times 10^{-3})(2.13)} = 6.09 \text{ ft/s}$$

$Q = A\upsilon = (0.00651 \text{ ft}^2)(6.09 \text{ ft/s}) = \mathbf{3.97 \times 10^{-2} \text{ ft}^3/\text{s}}$

9.30 Air flows in cross-hatched area.

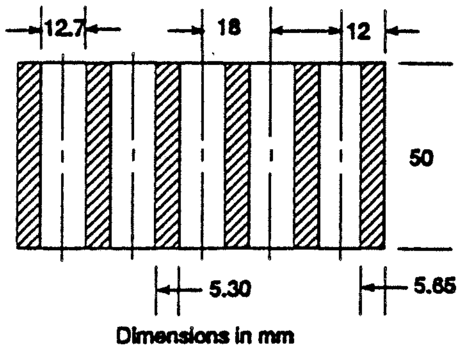

$A = [4(5.30) + 2(5.65)](50) = 1625 \text{ mm}^2$

$WP = 12(50) + 4(5.65) + 8(5.30) = 665 \text{ mm}$

$$R = \frac{A}{WP} = \frac{1625 \text{ mm}^2}{665 \text{ mm}} = 2.444 \text{ mm}$$

$$\upsilon = \frac{Q}{A}$$

$$= \frac{50 \text{ m}^3}{\text{h}} \cdot \frac{1}{1625 \text{ mm}^2} \cdot \frac{10^6 \text{ mm}^2}{\text{m}^2} \cdot \frac{1 \text{ h}}{3600 \text{ s}}$$

$\upsilon = 8.55 \text{ m/s}$

$$N_R = \frac{\upsilon(4R)(\rho)}{\mu} = \frac{(8.55)(4)(0.00244)(1.15)}{1.63 \times 10^{-5}} = \mathbf{5.90 \times 10^3}$$

9.31 $A = (0.45)(0.30) + \pi(0.30)^2/4 - 2(0.15)^2 = 0.1607 \text{ m}^2$

$WP = 2(0.45) + \pi(0.30) + 8(0.15) = 3.042 \text{ m}$

$R = A/WP = 0.1607 \text{ m}^2/3.042 \text{ m} = 0.0528 \text{ m}$

$\upsilon = Q/A = 0.10 \text{ m}^3/\text{s}/0.1607 \text{ m}^2 = 0.622 \text{ m/s}$

$$N_R = \frac{\upsilon(4R)\rho}{\mu} = \frac{(0.622)(4)(0.0528)(1260)}{0.30} = 552$$

(App. D) [refers to 0.30]

9.32 $A = (0.14446)^2 = 0.02087 \text{ m}^2$

$WP = 4(0.14446) = 0.5778 \text{ m}$

$$R = \frac{A}{WP} = \frac{0.02087 \text{ m}^2}{0.5778 \text{ m}} = 0.0361 \text{ m}$$

$$N_R = \frac{\upsilon(4R)}{\nu} = \frac{(35.9)(4)(0.0361)}{3.22 \times 10^{-7}} = \mathbf{1.61 \times 10^7}$$

$$\upsilon = \frac{Q}{A} = \frac{0.75 \text{ m}^3/\text{s}}{0.02087 \text{ m}^2} = 35.9 \text{ m/s}$$

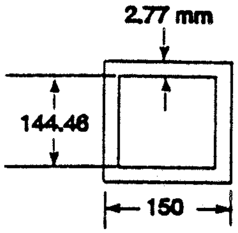

9.33 $$A = (0.75)(0.75) + \frac{\pi(1.50)^2}{8} = 1.446 \text{ in}^2(1 \text{ ft}^2/144 \text{ in}^2) = 0.01004 \text{ ft}^2$$

$WP = 0.75 + 2.25 + \pi(1.50)/2 = 5.356 \text{ in}(1 \text{ ft}/12 \text{ in}) = 0.4463 \text{ ft}$

$R = A/WP = 0.01004 \text{ ft}^2/0.4463 \text{ ft} = 0.02250 \text{ ft}$

$$\upsilon = \frac{Q}{A} = \frac{78.0 \text{ gal/min}}{0.01004 \text{ ft}^2} \times \frac{1 \text{ ft}^3/\text{s}}{449 \text{ gal/min}} = 17.30 \text{ ft/s}$$

$$N_R = \frac{\upsilon(4R)}{\nu} = \frac{(17.30)(4)(0.02250)}{1.40 \times 10^{-5}} = \mathbf{1.112 \times 10^5}$$

9.34 $$A = \frac{(2(\pi)(0.50)^2}{8} + 2(0.50)(0.50) + \left[\frac{\pi(0.75)^2}{4} - \frac{\pi(0.25)^2}{4}\right]$$

$A = 1.089 \text{ in}^2(1 \text{ ft}^2/144 \text{ in}^2) = 0.00756 \text{ ft}^2$

$$WP = \pi(0.50) + 4(0.50) + \frac{(\pi)(.25)(2)}{4} + \frac{(\pi)(0.75)(2)}{4}$$

$WP = 5.142 \text{ in}(1 \text{ ft}/12 \text{ in}) = 0.428 \text{ ft}$

$R = A/WP = 0.00756 \text{ ft}^2/0.428 \text{ ft} = 0.0177 \text{ ft}$

$$\upsilon = \frac{N_R \nu}{4R} = \frac{(1.5 \times 10^5)(1.40 \times 10^{-5})}{4(0.0177)} = 29.66 \text{ ft/s (High)}$$

$Q = A\upsilon = (0.00756 \text{ ft}^2)(29.66 \text{ ft/s}) = \mathbf{0.224 \text{ ft}^3/\text{s}}$

9.35 $a = 1.50 \dfrac{\sin 45°}{\sin 105°} = 1.098 \text{ in}$; $b = 1.50 \dfrac{\sin 30°}{\sin 105°} = 0.7765 \text{ in}$ } By Law of Sines

PART	A	WP
1	0.2209 in^2	1.178 in
2	0.0552	0.2945
3	0.0736	0.3927
4	0.0920	0.4909
5	0.5625	1.500
6	2.250	2.000
7	0.4118	0
8	0.4118	1.0981 = a
9	0.2912	0.7765 = b
A =	4.3690 in^2	7.7307 = WP

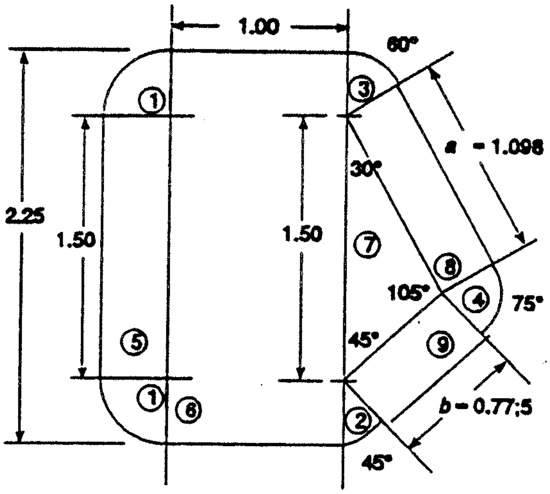

$R = A/WP = 0.5651 \text{ in}(1 \text{ ft}/12 \text{ in}) = \mathbf{0.04710 \text{ ft}}$

$$\upsilon = \frac{N_R \mu}{4R\rho} = \frac{(2.6\times10^4)(6.60\times10^{-6})}{(4)(0.0471)(1.53)} = 0.595 \text{ ft/s}$$

$$Q = A\upsilon = \frac{(4.369 \text{ in}^2)(0.595 \text{ ft/s})}{(144 \text{ in}^2/\text{ft}^2)} = \mathbf{0.0181 \text{ ft}^3/\text{s}}$$

9.36 $A = (2)(8) = 16 \text{ mm}^2(1 \text{ m}^2/10^6 \text{ mm}^2) = 1.60 \times 10^{-5} \text{ m}^2$

$WP = 2(8) + 2(2) = 20 \text{ mm} = 0.020 \text{ m}$

$$R = \frac{A}{WP} = \frac{1.60\times10^{-5} \text{ m}^2}{0.020 \text{ m}} = 8.00 \times 10^{-4} \text{ m}$$

$Q = A\upsilon = (1.60 \times 10^{-5} \text{ m}^2)(25.0 \text{ m/s}) = 4.00 \times 10^{-4} \text{ m}^3/\text{s}$ each

$\mathbf{Q_{tot} = (4.00 \times 10^{-4} \text{ m}^3/\text{s})6 = 2.40 \times 10^{-3} \text{ m}^3/\text{s}}$

$$N_R = \frac{\upsilon(4R)(\rho)}{\mu} = \frac{(25)(4)(8.00\times10^{-4})(1.20)}{1.50\times10^{-5}} = \mathbf{6.40 \times 10^3}$$

9.37 From Prob. 9.24, $R = 0.0898$ ft; $N_R = 3.808 \times 10^5$; $\upsilon = 8.79$ ft/s; Water at 90°F

$$\frac{4\ R}{\varepsilon} = \frac{4(0.0898)}{8.5\times10^{-5}} = 4226; \text{ then } f = 0.0165$$

$$h_L = f\frac{L}{4\ R}\cdot\frac{\upsilon^2}{2g} = \frac{(0.0165)(30)(8.79)^2}{(4)(0.0898)(2)(32.2)} = 1.65 \text{ ft}$$

$\Delta p = \gamma_w h_L = (62.1 \text{ lb/ft}^3)(1.65 \text{ ft})(1 \text{ ft}^2/144 \text{ in}^2) = \mathbf{0.713 \text{ psi}}$

9.38 Some data from Prob. 9.25 and Fig. 9.10.

Tube: Water at 95°C; γ = 9.44 kN/m^3: N_R = 1.23 × 10^5

$$\frac{D}{\varepsilon}=\frac{(0.01021)}{4.6\times10^{-5}} = 222;\ \text{then } f = 0.030$$

$$h_L = f\frac{L}{D}\frac{\upsilon^2}{2g}=\frac{(0.030)(5.25)(3.66)^2}{(0.01021)(2)(9.81)} = 10.53\ \text{m}$$

$\Delta p = \gamma_w h_L$ = (9.44 kN/m^3)(10.53 m) = **99.4 kPa**

Shell: Ethylene glycol at 25°C; γ = 10.79 kN/m^3:

v = 10.56 m/s: R = 1.76 × 10^{-3}; N_R = 5049 = 5.049 × 10^3

$4R/\varepsilon$ = (4)(1.76 × 10^{-3} m)/(4.6 × 10^{-5} m) = 153; Then f = 0.044

$$h_L = f\frac{L}{4R}\frac{v^2}{2g} = 0.044\frac{525}{4(0.00176)}\frac{10.56^2}{2(9.81)} = 186.5\ \text{m}$$

$\Delta p = \gamma h_L$ = (10.79 kN/m^3)(186.5 m) = 2018 kN/m^2 = 2018 kPa [Very high]

9.39 Some data from Prob. 9.26 and Fig. 9.11.

Each Pipe: Water at 20°C; γ = 9.79 kN/m^3; N_R = 6.08 × 10^4

$$\frac{D}{\varepsilon}=\frac{(0.1541)}{4.6\times10^{-5}} = 3350;\ \text{then } f = 0.021$$

$$h_L = f\frac{L}{D}\frac{\upsilon^2}{2g}=\frac{(0.021)(3.80)(0.402)^2}{(0.1541)(2)(9.81)} = 0.00427\ \text{m}$$

$\Delta p = \gamma_w h_L$ = (9.79 kN/m^3)(0.00427 m) = 0.00418 kPa = **41.8 Pa**

Duct: Benzene at 70°C; γ_B = (0.862)(9.81 kN/m^3) = 8.46 kN/m^3

$$N_R = 6.08\times10^4;\ R = 0.0157\ \text{m};\ \frac{4\ R}{\varepsilon}=\frac{(4)(0.0157)}{4.6\times10^{-5}} = 1365$$

$$f = 0.023;\ h_L = f\frac{L}{4\ R}\cdot\frac{\upsilon^2}{2g}=\frac{(0.023)(3.80)(0.392)^2}{(4)(0.0157)(2)(9.81)} = 0.0109\ \text{m}$$

$\Delta p = \gamma_B h_L$ = (8.46 kN/m^3)(0.0109 m) = 0.0920 kPa = **92.0 Pa**

9.40 Some data from Prob. 9.27 and Fig. 9.12.

Each Pipe: Water at 200°F; γ_w = 60.1 lb/ft^3; N_R = 1.00 × 10^6

$$\frac{D}{\varepsilon}=\frac{0.1342}{1.5\times10^{-4}} = 895:\ \text{then } f = 0.021$$

$$h_L = f\frac{L}{D}\frac{\upsilon^2}{2g}=\frac{(0.021)(50)(25)^2}{(0.1342)(2)(32.2)} = 75.9\ \text{ft}$$

$\Delta p = \gamma_w h_L$ = (60.1 lb/ft^3)(75.9 ft)(1 ft^2/144 in^2) = **31.7 psi**

Shell: Water at 60°F; γ = 62.4 lb/ft^3; N_R = 2.35 × 10^5; R = 0.0284 ft

$$\frac{4\ R}{\varepsilon}=\frac{(4)(0.0284)}{1.5\times10^{-4}} = 758;\ \text{then } f = 0.0225$$

$$h_L = f\frac{L}{4\ R}\cdot\frac{\upsilon^2}{2g}=\frac{(0.0225)(50)(25)^2}{(4)(0.0284)(2)(32.2)} = 96.1\ \text{ft}$$

$\Delta p = \gamma_w h_L$ = (62.4 lb/ft^3)(96.1 ft)(1 ft^2/144 in^2) = **41.6 psi**

9.41 Data from Prob. 9.28 and Fig. 9.15. Copper tubes.

Water at 10°C; $\gamma_w = 9.81$ kN/m^3; $N_R = 1.58 \times 10^5$: $R = 5.670 \times 10^{-3}$ m

$$\frac{4\,R}{\varepsilon} = \frac{(4)(5.670\times10^{-3})}{1.5\times10^{-6}} = 15120\text{: } f = 0.017$$

$$h_L = f\,\frac{L}{4\,R}\cdot\frac{\upsilon^2}{2g} = \frac{(0.017)(3.60)(9.05)^2}{(4)(5.670\,x\,10^{-3})(2)(9.81)} = 11.26\text{ m}$$

$\Delta p = \gamma_w h_L = (9.81\text{ kN/m}^3)(11.26\text{ m}) = \mathbf{111\ kPa}$

9.42 Data from Prob. 9.29 and Fig. 9.16. $N_R = 1500$ Laminar

$$f = \frac{64}{N_R} = \frac{64}{1500} = 0.0427\text{: } R = 9.77 \times 10^{-3}\text{ ft: } L = \frac{57\text{ in}}{12\text{ in/ft}} = 4.75\text{ ft}$$

$$h_L = f\,\frac{L}{4\,R}\cdot\frac{\upsilon^2}{2g} = \frac{(0.0427)(4.75)(6.09)^2}{(4)(9.77\times10^{-3})(2)(32.2)} = 2.99\text{ ft}$$

Ethylene glycol at 77°F - $\gamma = 68.47$ lb/ft^3

$\Delta p = \gamma h_L = (68.47\text{ lb/ft}^3)(2.99\text{ ft})(1\text{ ft}^2/144\text{ in}^2) = \mathbf{1.42\ psi}$

9.43 Data from Prob. 9.31 and Fig. 9.18. $N_R = 552$ Laminar

$$f = \frac{64}{N_R} = \frac{64}{552} = 0.116\text{: } R = 0.0528\text{ m}$$

$$h_L = f\,\frac{L}{4\,R}\cdot\frac{\upsilon^2}{2g} = \frac{(0.116)(22.6)(0.622)^2}{(4)(0.0528)(2)(9.81)} = 0.244\text{ m}$$

$\Delta p = \gamma_G h_L = (1.26)(9.81\text{ kN/m}^3)(0.244\text{ m}) = \mathbf{3.02\ kPa}$

9.44 Data from Prob. 9.32: $R = 0.0361$ m: $N_R = 1.61 \times 10^7$

$$\frac{4\,R}{\varepsilon} = \frac{(4)(0.0361)}{1.5\times10^{-6}} = 96267\text{: } f = 0.008\text{ approx.}$$

$$h_L = f\,\frac{L}{4\,R}\cdot\frac{\upsilon^2}{2g} = \frac{(0.008)(22.6)(35.9)^2}{(4)(0.0361)(2)(9.81)} = 82.2\text{ m}$$

$\Delta p = \gamma h_L = (9.47\text{ kN/m}^3)(82.2\text{ m}) = \mathbf{779\ kPa}$

└─ Water at 90°C

9.45 Data from Prob. 9.33 and Fig. 9.19. $N_R = 1.112 \times 10^5$

$$R = 0.0225\text{ ft: } \frac{4\,R}{\varepsilon} = \frac{(4)(0.0225)}{2.5\times10^{-5}} = 3600\text{: } f = 0.019$$

$L = (105\text{ in})(1\text{ ft}/12\text{ in}) = 8.75$ ft

$$h_L = f\,\frac{L}{4\,R}\cdot\frac{\upsilon^2}{2g} = \frac{(0.019)(8.75)(17.30)^2}{(4)(0.0225)(2)(32.2)} = 8.58\text{ ft}$$

$\Delta p = \gamma h_L = (62.4\text{ lb/ft}^3)(8.58\text{ ft})(1\text{ ft}^2/144\text{ in}^2) = \mathbf{3.72\ psi}$

9.46 Data from Prob. 9.34 and Fig. 9.20. $N_R = 1.5 \times 10^5$: $R = 0.0177$ ft; $\upsilon = 29.66$ ft/s

$$\frac{4\,R}{\varepsilon} = \frac{(4)(0.0177)}{1.5\times10^{-4}} = 472: f = 0.025 \qquad \textbf{[Steel]}$$

$L = (45 \text{ in})(1 \text{ ft}/12 \text{ in}) = 3.75$ ft

$$h_L = f\frac{L}{4\,R}\cdot\frac{\upsilon^2}{2g} = \frac{(0.025)(3.75)(29.66)^2}{(4)(0.0177)(2)(32.2)} = 18.1 \text{ ft}$$

$\Delta p = \gamma h_L = (62.4 \text{ lb/ft}^3)(18.1 \text{ ft})(1 \text{ ft}^2/144 \text{ in}^2) = \mathbf{7.84\ psi}$

9.47 $A = (2.25)(1.50) - 7(\pi(0.375)^2/4) = 2.602 \text{ in}^2(1 \text{ ft}^2/144 \text{ in}^2) = 0.01807 \text{ ft}^2$

$WP = 2(2.25) + 2(1.50) + 7(\pi)(0.375) = 15.75 \text{ in}(1 \text{ ft}/12 \text{ in}) = 1.312$ ft

$$R = \frac{A}{WP} = \frac{0.01807 \text{ ft}^2}{1.312 \text{ ft}} = 0.0138 \text{ ft}$$

$$\left.\begin{array}{l} N_R = \dfrac{\upsilon 4 R \rho}{\mu}: \upsilon = \dfrac{N_R \mu}{4\,R\,\rho} = \dfrac{(8000)(3.38\times10^{-4})}{4(0.0138)(2.13)} = 23.05 \text{ ft/s} \\ L = 128 \text{ in}(1 \text{ ft}/12 \text{ in}) = 10.67 \text{ ft}: \dfrac{4\,R}{\varepsilon} = \dfrac{4(0.0138)}{5\times10^{-6}} = 11000 \end{array}\right\} f = 0.0325$$

$$h_L = f\frac{L}{4\,R}\cdot\frac{\upsilon^2}{2g} = (0.0325)\frac{10.67}{4(0.0138)}\frac{(23.05)^2}{2(32.2)} = \mathbf{51.9\ ft}$$

$$Q = A\upsilon = (0.01807 \text{ ft}^2)(23.05 \text{ ft/s}) = 0.417 \text{ ft}^3/\text{s} \times \frac{449 \text{ gal/min}}{1 \text{ ft}^3/\text{s}} = \mathbf{187\ gal/min}$$

9.48

$$\left.\begin{array}{l} A = (0.100 \text{ m})^2 - 4(0.02)(0.03)\text{m}^2 = 0.0076 \text{ m}^2 \\ WP = 4(0.10) + 8(0.03) = 0.64 \text{ m} \end{array}\right\} R = \frac{A}{WP} = 0.0119\,m$$

$$\upsilon = \frac{Q}{A} = \frac{3000 \text{ L/min}}{0.0076 \text{ m}^2} \times \frac{1 \text{ m}^3/\text{s}}{60000 \text{ L/min}} = 6.58 \text{ m/s}$$

$$N_R = \frac{\upsilon(4\,R)\rho}{\mu} = \frac{(6.58)(4)(0.0119)(789)}{5.60\times10^{-4}} = 4.40 \times 10^5; f = 0.0135$$

$$h_L = f\frac{L}{4\,R}\cdot\frac{\upsilon^2}{2g} = \frac{(0.0135)(2.25)(6.58)^2}{4(0.0119)(2)(9.81)} = \mathbf{1.41\ m}$$

9.49 $A = (28)(14) - 3[(8)(2) + \pi(2)^2/4] = 334.6 \text{ in}^2(1 \text{ ft}^2/144 \text{ in}^2) = 2.32 \text{ ft}^2$

$WP = 2(28) + 2(14) + 3[2(8) + \pi(2)] = 150.8 \text{ in}(1 \text{ ft}/12 \text{ in}) = 12.57$ ft

$R = A/WP = 0.1848$ ft

$$N_R = \frac{\upsilon(4\,R)\rho}{\mu} = \frac{(20)(4)(0.1848)(2.06\times10^{-3})}{4.14\times10^{-7}} = 7.36 \times 10^4$$

9.50 **Each Tube:** Ethyl Alcohol at 0°F; assume $\rho = 1.53$ slugs/ft^3

$\mu = 5 \times 10^{-5}$ lb-s/ft^2 (App. D); $N_R = \dfrac{\upsilon D \rho}{\mu}$

$$\upsilon = \frac{N_R \mu}{D\rho} = \frac{(3.5\times10^4)(5.0\times10^{-5})}{(0.044)(1.53)} = 26.02 \text{ ft/s}$$

$D = 13.4 \text{ mm}(1.0 \text{ in}/25.4 \text{ mm}) = 0.5276 \text{ in} \times 1 \text{ ft}/12 \text{ in} = 0.044$ ft

$$Q = A\upsilon = \frac{\pi(0.044\text{ ft})^2}{4} \times 26.02\text{ ft} = 0.0395\text{ ft}^3/\text{s}$$

Total Flow for 3 Tubes: $Q_T = 3(0.0395) = \mathbf{0.118\ ft^3/s}$

$$h_L = f\frac{L}{D}\frac{\upsilon^2}{2g} = \frac{(0.0232)(10.5)(26.02)^2}{(0.044)(2)(32.2)} = \mathbf{58.2\ ft}$$

$$\frac{D}{\varepsilon} = \frac{0.044}{5\times10^{-6}} = 8793; f = 0.0232$$

$\Delta p = \gamma h_L = (49.01\text{ lb/ft}^3)(58.2\text{ ft})(1\text{ ft}^2/144\text{ in}^2) = \mathbf{19.8\ psi}$

Shell: Methyl Alcohol at 77°F (App. B)

$A = (2.00)(1.00) + \pi(1.00)^2/4 - 3\pi(0.625)^2/4 = 1.865\text{ in}^2(1\text{ ft}^2/144\text{ in}^2)$

$A = 0.01295\text{ ft}^2$

$WP = 2(2.0) + \pi(1.0) + 3\pi(0.625) = 13.03\text{ in}(1\text{ ft}/12\text{ in}) = 1.086\text{ ft}$

$R = A/WP = 0.0119\text{ ft}$

$$\upsilon = \frac{N_R\mu}{4\ R\rho} = \frac{(3.5\times10^4)(1.17\times10^{-5})}{4(0.0119)(1.53)} = 5.61\text{ ft/s}$$

$Q = A\upsilon = (0.01295\text{ ft}^2)(5.61\text{ ft/s}) = \mathbf{0.0727\ ft^3/s}$

$$\frac{4\ R}{\varepsilon} = \frac{4(0.0119)}{5\times10^{-6}} = 9540; f = 0.0232$$

$$h_L = f\frac{L}{4\ R}\frac{\upsilon^2}{2g} = \frac{(0.0232)(10.5)(5.61)^2}{4(0.0119)(2)(32.2)} = 2.50\text{ ft}$$

$\Delta p = \gamma h_L = (49.1\text{ lb/ft}^3) \times 2.50\text{ ft} \times (1\text{ ft}^2/144\text{ in}^2) = \mathbf{0.851\ psi}$

9 51 Given: Water at 40°F; $N_R = 3.5 \times 10^4$; Figure 9.27; Section is semicircular.

Find: Volume fiow rate of water.

$N_R = v(4R)/\nu$; Then, $v = N_R\, \nu/(4R)$ = Average velocity of flow

$\nu = 1.67\ \tau\, 10^{-5}\text{ ft}^2/\text{s}$ = Kinematic viscosity

$A = (1.431 \times 10^{-2}\text{ ft}^2)/2 = 7.155 \times 10^{-3}\text{ ft}^2$

$ID = 0.1350\text{ ft}$; $WP = ID + \pi(ID)/2 = ID(1 + \pi/2) = 0.347\text{ ft}$

$R = A/WP = (7.155 \times 10^{-3}\text{ ft}^2)/(0.347\text{ ft}) = 0.0206\text{ ft}$

Then, $v = N_R\nu/(4R) = (3.5 \times 10^4)(1.67 \times 10^{-5})/(4)(0.0206) = 7.09\text{ ft/s}$

$Q = Av = (7.155 \times 10^{-3}\text{ ft}^2)(7.09\text{ ft/s}) = \mathbf{0.0507\ ft^3/s = Q}$

Energy Loss for 92 in (7.667 ft) of drawn steel: $h_L = f(L/4R)(v/2g)$

$4R/\varepsilon = 4(0.0206\text{ ft})/(5.0 \times 10^{-6}\text{ ft}) = 16\,480$ Then $f = 0.023$

$h_L = (0.023)\,[7.667/(4)(0.0206)][(7.09)^2/(2)(32.2)] = \mathbf{1.67\ ft}$

9.52 **Given:** Figure 9.28. Three semicircular sections. Velocity = v = 15 ft/s in each.

Ethylene glycol at 77°F; $\rho = 2.13\text{ slugs/ft}^3$; $\mu = 3.38 \times 10^{-4}\text{ lb s/ft}^2$(App. B)

Find: Reynolds number in each passage. $N_R = v(4R)\rho/\mu$

Top channel: 2-in Type K.copper tube (Half). $ID = 0.1632\text{ ft}$; $A_{tot} = 2.093 \times 10^{-2}\text{ ft}^2$

$A = A_{tot}/2 = (2.093 \times 10^{-2}\text{ ft}^2)/2 = 1.0465 \times 10^{-2}\text{ ft}^2$

$WP = ID + \pi(ID)/2 = ID(1 + \pi/2) = 0.4196\text{ ft}$

$R = A/WP = (1.0465 \times 10^{-2}\text{ ft}^2)/(0.4196\text{ ft}) = 0.0249\text{ ft}$

$N_R = v(4R)\rho/\mu = (15)(4)(0.0249)(2.13)/(3.38 \times 10^{-4}) = 9.43 \times 10^3 = \mathbf{9430 = N_R}$ **Turbulent**

Both Side Channels: 1½-in Type K copper tube (Half). $ID = 0.1234$ ft; $A_{tot} = 1.196 \times 10^{-2}$ ft^2
$A = A_{tot}/2 = (1.196 \times 10^{-2}\text{ ft}^2)/2 = 5.98 \times 10^{-3}\text{ ft}^2$
$WP = ID + \pi(ID)/2 = ID(1 + \pi/2) = 0.3172$ ft
$R = A/WP = (5.98 \times 10^{-3}\text{ ft}^2)/(0.3172\text{ ft}) = 0.01885$ ft
$N_R = v(4R)\rho/\mu = (15)(4)(0.01885)(2.13)/(3.38 \times 10^{-4}) = 7.127 \times 10^3 = 7127 = \boldsymbol{N_R}$ **Turbulent**

Energy Loss for 54 in (4.50 ft) of drawn copper: $h_L = f(L/4R)(v^2/2g)$
Top: $4R/\varepsilon = 4(0.0249\text{ ft})/(5.0 \times 10^{-6}\text{ ft}) = 19\,920$ Then $f = 0.0315$
$h_L = (0.0315)[4.50/(4)(0.0249)][(15.0)^2/(2)(32.2)] =$ **4.97 ft**
Each side: $R/\varepsilon = 4(0.01885\text{ ft})/(5.0 \times 10^{-6}\text{ ft}) = 15\,080$ Then $f = 0.0340$
$h_L = (0.0340)[4.50/(4)(0.01S85)][(15.0)^2/(2)(32.2)] =$ **7.09 ft (each of two sides)**
Total loss for all three channels: $h_{LT} = 4.97 + 2(7.09) =$ **19.15 ft**

9.53 **Given:** Figure 9.29. Rectangular channel with three fins. $Q = 225$ L/min
Brine (20% NaCl), sg =1.10 at 0°C; $\rho = 1.10(1000\text{ kg/m}^3) = 1100\text{ kg/m}^3$
$\mu = 2.5 \times {}^{10-3}$ N s/m^2 (App.D)
Find: Reynolds number for the flow. $N_R = v(4R)\ \rho/\mu$
$A = (20)(50) - 3(5)(10) = (850\text{ mm}^2\ [(1\text{ m}^2)/(10^3\text{ mm})^2] = 8.5 \times 10^{-4}\text{ m}^2$
$WP = 2(20) + 2(50) + 6(10) = 200$ mm
$R = A/WP = (850\text{ mm}^2)/(200\text{ mm}) = (4.25\text{ mm})(1\text{ m}^2/1000\text{ mm}) = 0.00425$ m
$v = Q/A = (0.00375\text{ m}^3/\text{s})/(8.5 \times 10^{-4}\text{ m}^2) = 4.41$ m/s
$N_R = v(4R)\ \rho/\mu = (4.41)(4)(0.00425)(1100)/(2.5 \times 10^{-3}) = \mathbf{3.30 \times 10^4} = \boldsymbol{N_R}$ **Turbulent**
Energy Loss for 1.80 m of commercial steel: $h_L = f(L/4R)(v^2/2g)$
$4R/\varepsilon = 4(0.00425\text{ m})/(4.6 \times 10^{-5}) = 370$ Then $f = 0.030$
$h_L = (0.030)[1.80/(4)(0.00425)][(4.41)^2/(2)(9.81)] =$ **3.149 m**

CHAPTER TEN

MINOR LOSSES

10.1 $D_2/D_1 = 100/50 = 2.00$; $K = 0.52$ (Table 10.1)

$h_L = K\upsilon_1^2/2g = 0.52(3.0\text{ m/s})^2/(2)(9.81\text{ m/s}^2)$ = **0.239 m**

10.2 $$\upsilon_1 = \frac{Q}{A_1} = \frac{3.0\times10^{-3}\text{ m}^3\text{/s}}{4.636\times10^{-4}\text{ m}^2} = 6.47\text{ m/s}: \frac{D_2}{D_1} = \frac{85.4\text{ mm}}{24.3\text{ mm}} = 3.51$$

$$K = 0.73\text{ (Table 10.1)}:\ h_L = K\frac{\upsilon_1^2}{2g} = \frac{0.73(6.47)^2}{2(9.81)}\text{m} = \mathbf{1.56\ m}$$

10.3 $$\upsilon_1 = \frac{Q}{A_1} = \frac{0.10\text{ ft}^3\text{/s}}{0.00499\text{ ft}^2} = 20.0\text{ ft/s}: \frac{D_2}{D_1} = \frac{0.2803\text{ ft}}{0.07975\text{ ft}}1 = 3.51;\ K = 0.73\text{ (Table 10.1)}$$

$$h_L = K\frac{\upsilon_1^2}{2g} = \frac{(0.73)(20.0\text{ ft/s})^2}{2(32.2\text{ ft/s}^2)} = \mathbf{4.55\ ft}$$

10.4 $$\frac{p_1}{\gamma} + z_1 + \frac{\upsilon_1^2}{2g} - h_L = \frac{p_2}{\gamma} + z_2 + \frac{\upsilon_2^2}{2g}: \frac{D_2}{D_1} = \frac{6.0}{2.0} = 3.0 \rightarrow K = 0.78\text{ (Table 10.1)}$$

$$p_1 - p_2 = \gamma\left[\frac{\upsilon_2^2 - \upsilon_1^2}{2g} + h_L\right];\text{ assume } z_1 = z_2$$

$$h_L = K\upsilon_1^2/2g = (0.78)(4.0\text{ ft/s})^2/2(32.2\text{ ft/s}^2) = 0.194\text{ ft}$$

$$\upsilon_2 = \upsilon_1\left(\frac{D_1}{D_2}\right)^2 = 4.0\text{ ft/s}\left(\frac{2.0}{6.0}\right)^2 = 0.444\text{ ft/s}$$

$$p_1 - p_2 = \frac{62.4\text{ lb}}{\text{ft}^3}\left[\frac{0..444^2 - 4.0^2}{2(32.2)} + 0.194\right]\text{ft}\times\frac{1\text{ ft}^2}{144\text{ in}^2} = \mathbf{-0.0224\ psi}$$

10.5 $$\frac{D_2}{D_1} = 3.0;\ K = 0.16\text{ (Table 10.2) for }\theta = 15°$$

$$h_L = K\upsilon_1^2/2g = 0.16(4.0)^2/2(32.2) = 0.0398\text{ ft}$$

$$p_1 - p_2 = 62.4\left[\frac{0.44^2 - 4.00^2}{2(32.2)} + 0.0398\right]\text{ft}\times\frac{1\text{ ft}^2}{144\text{ in}^2} = \mathbf{-0.0891\ psi}$$

10.6 $$\frac{D_2}{D_1} = \frac{75}{25} = 3.0;\ K = 0.31\text{ (Table 10.2) for }\theta = 20°$$

$$h_L = K\upsilon_1^2/2g = 0.31(3.00\text{ m/s})^2/2(9.81\text{ m/s}^2) = 0.142\text{ m}$$

10.7 $K = 0.71$; $h_L = 0.71(3.00)^2/2(9.81)$ = **0.326 m**

10.8 $\upsilon_1 = \frac{Q}{A_1} = \frac{85 \text{ gal/min}}{0.02333 \text{ ft}^2} \times \frac{1 \text{ ft}^3/\text{s}}{449 \text{ gal/min}} = 8.11 \text{ ft/s}$: $\frac{D_2}{D_1} = \frac{0.5054}{0.1723} = 2.93$

$h_L = K\upsilon_1^2/2g = K(8.11)^2/2(32.2) = K(1.022 \text{ ft})$

θ	2°	10°	15°	20°	30°	40°	60°
K	0.03	0.08	0.16	0.31	0.48	0.59	0.71
h_L	0.031	0.082	0.164	0.317	0.491	0.603	0.726 ft

10.9 Graph shown after Problem 10.11.

10.10 and 10.11

$$\sin\left(\frac{\theta}{2}\right) = \frac{(D_2 - D_1)/2}{L}$$

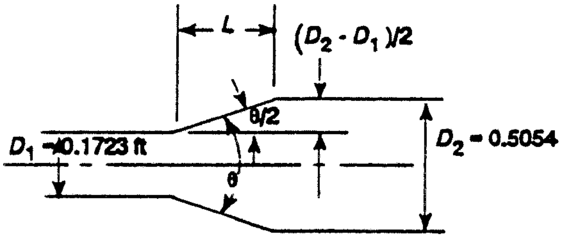

$$L = \frac{(D_2 - D_1)/2}{\sin(\theta/2)}$$

$$L = \frac{(0.5054 - 0.1723)/2}{\sin(\theta/2)} = \frac{0.1666 \text{ ft}}{\sin(\theta/2)}$$

θ	$\theta/2$	$\sin(\theta/2)$	L(ft)	**Prob. 10.10** h_{L_f} (ft)	**Prob. 10.8** $h_{L_{exp}}$ (ft)	**Prob. 10.11** $h_{L_{exp}}$ (ft)
2°	1°	0.01745	9.54	0.0414	0.031	0.0724
10°	5°	0.08716	1.910	0.0083	0.082	0.0903
15°	7.5°	0.1305	1.276	0.0055	0.164	0.1695
20°	10°	0.1736	0.959	0.0042	0.317	0.3212
30°	15°	0.2588	0.643	0.0028	0.491	0.4938
40°	20°	0.342	0.487	0.0021	0.603	0.6051
60°	30°	0.500	0.333	0.0014	0.726	0.7274

$$h_{L_f} = f\frac{L}{D}\frac{\upsilon^2}{2g} = \frac{(0.0215)(L)(2.099)^2}{(0.3389)(2)(32.2)} = 0.00434(L)$$

$D = (D_2 + D_1)/2 \ (0.5054 + 0.1723)/2 = 0.3389 \text{ ft}$

$A = \pi D^2/4 = \pi(0.3389)^2/4 = 0.0902 \text{ ft}^2$

$$\upsilon = \frac{Q}{A} = \frac{85 \text{ gal/min}}{0.0902 \text{ ft}^2} \times \frac{1 \text{ ft}^3/\text{s}}{449 \text{ gal/min}} = 2.099 \text{ ft/s}$$

$$N_R = \frac{\upsilon D}{\nu} = \frac{(2.099)(0.3389)}{1.21 \times 10^{-5}} = 5.88 \times 10^4 : \frac{D}{\varepsilon} = \frac{0.3389}{1.5 \times 10^{-4}} = 2259: f = 0.0215$$

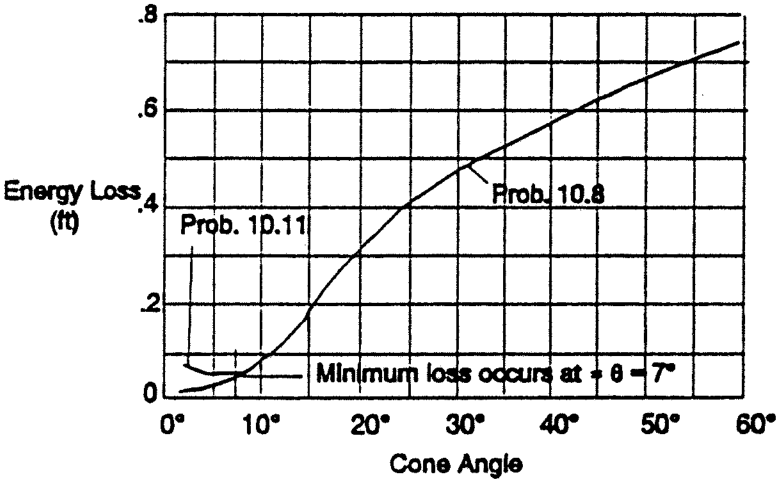

10.12 **Ideal diffuser - No energy loss**

$$\frac{p_1}{\gamma}+z_1+\frac{\upsilon_1^2}{2g}-h_L=\frac{p_2}{\gamma}+z_2+\frac{\upsilon_2^2}{2g} :: \ h_L=0, z_1=z_2$$

$$p_2=p_1+\gamma\left[\frac{\upsilon_1^2-\upsilon_2^2}{2g}\right] = 500 \text{ kPa} + \frac{9.79 \text{ kN}}{\text{m}^3}\left[\frac{4.98^2-0.584^2}{2(9.81)} \text{ m}\right] = \mathbf{512.2 \text{ kPa}}$$

12.2 kPa Recovery

$$\upsilon_1=\frac{Q}{A_1}=\frac{150 \text{ L/min}}{5.017\times10^{-4}}\times\frac{1 \text{ m}^3\text{/s}}{60000 \text{ L/min}} = 4.98 \text{ m/s}$$

$$\upsilon_2=\frac{Q}{A_2}=\frac{150}{(4.282\times10^{-3})(60000)} = 0.584 \text{ m/s}$$

10.13 $$p_2=p_1+\gamma\left[\frac{\upsilon_1^2-\upsilon_2^2}{2g}-h_L\right] = 500 + 9.79\left[\frac{4.98^2-0.584^2}{2(9.81)}-0.873\right] = $$ 503.7 kPa; 3.7 kPa recov. 30% of ideal

$$h_L=K\frac{\upsilon_1^2}{2g}=0.69\frac{(4.98)^2}{2(9.81)} = 0.873 \text{ m}$$

$D_2/D_1 = 73.8 \text{ mm}/25.3 \text{ mm} = 2.92; K = 0.69$

10.14 **Same analysis as 10.13**

a. $\theta = 60°$; $K = 0.71$; $h_L = 0.899$ m; $\boldsymbol{p_2}$ = **503.6 kPa**; 29% of ideal

b. $\theta = 30°$; $K = 0.48$; $h_L = 0.607$ m; $\boldsymbol{p_2}$ = **506.4 kPa**; 53% of ideal

c. $\theta = 10°$; $K = 0.08$; $h_L = 0.101$ m; $\boldsymbol{p_2}$ = **511.2 kPa**; 92% of ideal

10.15 **Exit loss:** $h_L = 1.0 \ \upsilon^2/2g = 1.0(2.146)^2/2(9.81)$ = **0.235 m**

$$\upsilon=\frac{Q}{A}=\frac{0.04 \text{ m}^3\text{/s}}{1.864\times10^{-2}\text{m}^2} = 2.146 \text{ m/s}$$

10.16 **Exit loss:** $h_L = 1.0\ \upsilon^2/2g = 1.0(7.48)^2/2(32.2) =$ **0.868 ft**

$$\upsilon = \frac{Q}{A} = \frac{1.50\ \text{ft}^3/\text{s}}{0.2006\ \text{ft}^2} = 7.48\ \text{ft/s}$$

10.17 **Sudden contraction:** $h_L = K\upsilon_2^2/2g$

$$\upsilon_2 = \upsilon_1\left(\frac{A_1}{A_2}\right) = \upsilon_1\left(\frac{D_1}{D_2}\right)^2 = 4.00\ \text{ft/s}\left(\frac{4.0}{2.0}\right)^2 = 16.00\ \text{ft/s}$$

For $D_2/D_12 = 2.0$, $K = 0.34$ (Table 10.3)

$h_L = (0.34)(16.0\ \text{ft/s})^2/2(32.2\ \text{ft/s}^2) =$ **1.35 ft**

10.18 $$p_2 = p_1 + \gamma\left[\frac{\upsilon_1^2 - \upsilon_2^2}{2g} - h_L\right]$$

$$= 80\ \text{psig} + (0.87)\left[\frac{62.4\ \text{lb}}{\text{ft}^3}\right]\left[\frac{4.00^2 - 16.00^2}{2(32.2)} - 1.35\right]\text{ft} \times \frac{1\ \text{ft}^2}{144\ \text{in}^2}$$

$p_2 = 80$ psig – 1.91 psi = **78.09 psig**

See Probs. 10.12, 10.13 for analysis.

10.19 **False:** K decreases, but $h_L = K\left(\upsilon_2^2/2g\right)$

The velocity head increases faster than K decreases.

Examples: $\upsilon_2 = 1.2$ m/s; $K = 0.44$; $h_L = 0.0323$ m

$\upsilon_2 = 6.0$ m/s; $K = 0.39$; $h_L = 0.716$ m

$\upsilon_2 = 12.0$ m/s; $K = 0.33$; $h_L = 2.42$ m

10.20 **Sudden contraction:** $h_L = K\left(\upsilon_2^2/2g\right)$

$$\frac{D_1}{D_2} = \frac{122.3\ \text{mm}}{49.3\ \text{mm}} = 2.48$$

$$\upsilon_2 = \frac{Q}{A_2} = \frac{500\ \text{L/min}}{1.905\times10^{-3}\ \text{m}^2} \times \frac{1\ \text{m}^3/\text{s}}{60000\ \text{L/min}} = 4.37\ \text{m/s};\ K = 0.38\ \text{(Table 10.3)}$$

$h_L = (0.38)(4.37)^2/2(9.81) =$ **0.371 m**

10.21 **Gradual contraction:** From Prob. 10.20: $\upsilon_2 = 4.37$ m/s; $\frac{D_1}{D_2} = 2.48$

$K = 0.23$; $h_L = (0.23)(4.37)^2/2(9.81) =$ **0.224 m** (Fig. 10.10) $\theta = 105°$

10.22 **Sudden contraction:** $D_1/D_2 = 0.3188\ \text{ft}/0.125\ \text{ft} = 2.55$

$$\upsilon_2 = \frac{Q}{A_2} = \frac{250\ \text{gal/min}}{0.01227\ \text{ft}^2} \times \frac{1\ \text{ft}^3/\text{s}}{449\ \text{gal/min}} = 45.38\ \text{ft/s};\ K = 0.31\ \text{(Table 10.3)}$$

$h_L = K\upsilon_2^2/2g = (0.31)(45.38)^2/2(32.2) =$ **9.91 ft**

10.23 **Gradual contraction:** Data from Prob. 10.22: $K = 0.135$ (Fig. 10.10) $\theta = 76°$
$h_L = (0.135)(45.38)^2/2(32.2) = \mathbf{4.32\ ft}$

10.24 **Gradual contraction:** Data from Prob. 10.22: $D_1/D_2 = 2.55$
$h_L = K\upsilon_2^2/2g = K(45.38)^2/2(32.2) = K(31.98\ \text{ft})$

θ	K	h_L (ft)
150°	0.36	11.51
120°	0.28	8.95
105°	0.23	7.35
90°	0.19	6.08
76°	0.135	4.32
50–60°	0.075	2.40
15–40°	0.045	1.44
10°	0.048	1.53
5°	0.084	2.69
3°	0.109	3.49

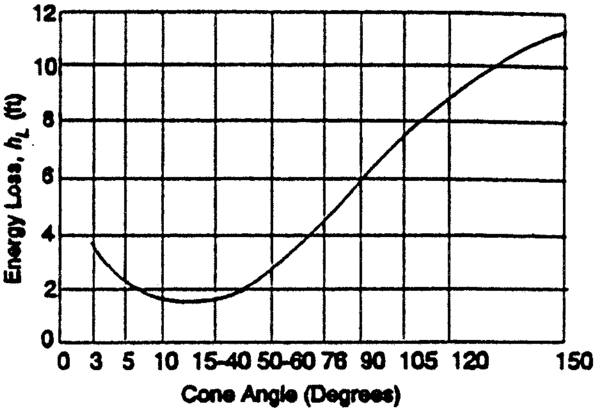

10.25 Sketches of selected contractions:

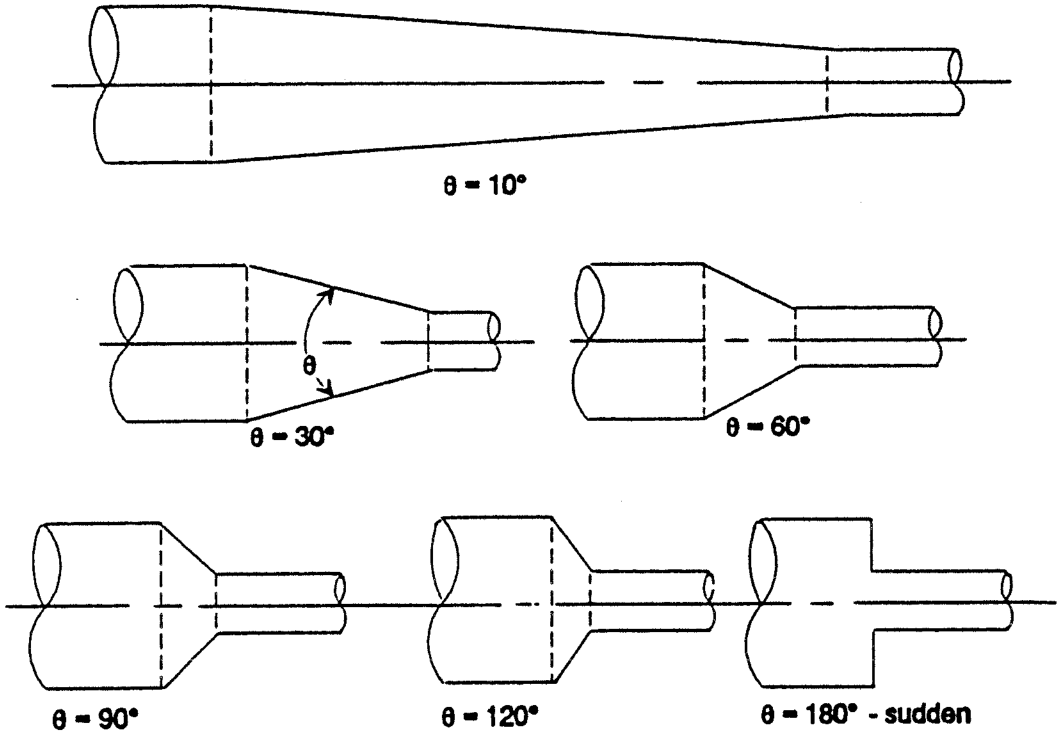

10.27 Gradual contraction, $\theta = 120°$
$D_1 = 6.14$ in, $D_2 = 3.32$ in Ductile iron pipe
$D_1/D_2 = 1.85$; $\boldsymbol{K} = \mathbf{0.255}$

10.28 $$\upsilon_2 = \frac{Q}{A_2} = \frac{50\text{ gal/min}}{1.907\times10^{-2}\text{ ft}^2}\times\frac{1\text{ ft}^3\text{/s}}{449\text{ gal/min}} = 5.84\text{ ft/s}$$

$$h_L = K\left(\frac{\upsilon_2^2}{2g}\right) = 0.50\left[\frac{(5.84\text{ ft/s})^2}{2(32.2\text{ ft/s}^2)}\right] = \mathbf{0.265\ ft}$$

10.29 Entrance loss: $$h_L = K\frac{\upsilon_2}{2g} = K\frac{(3.0\text{ m/s})^2}{2(9.81\text{ m/s}^2)} = K(0.459\text{ m})$$

a. $K = 1.0$; $h_L = \mathbf{0.459\ m}$
b. $K = 0.50$; $h_L = \mathbf{0.229\ m}$
c. $K = 0.25$; $h_L = \mathbf{0.115\ m}$
d. $K = 0.04$; $h_L = \mathbf{0.018\ m}$

10.30 10 in Sch. 40 pipe: $D = 0.2545$ m
Globe valve: $L_e/D = 340$
$L_e = (L_e/D) \times D = 340(0.2545\text{ m}) = \mathbf{86.53\ m}$

10.31 **Gate valve, fully open:** $L_e/D = 8$
$L_e = (L_e/D) \times D = 8(0.2545\text{ m}) = \mathbf{2.04\ m}$

10.32 **Ball-type check valve:**
Let $K = f_T(L_e/D) = f_T(150) = 0.019(150) = \mathbf{2.85}$
For 2-in Schedule 40 pipe, $f_T = 0.019$ (Table 10.5)

10.33 $$\Delta p = \gamma_{h_L} = \gamma\left[f_T\frac{L_e}{D}\frac{\upsilon^2}{2g}\right] = (0.90)\left(\frac{62.4\text{ lb}}{\text{ft}^3}\right)\left[(0.016)(150)\frac{(10.4)^2}{2(32.2)}\right]\frac{(\text{ft})(1\text{ ft}^2)}{144\text{ in}^2} = \mathbf{1.58\ psi}$$

Angle valve $$\upsilon = \frac{Q}{A} = \frac{650\text{ gal/min}}{0.1390\text{ ft}^2}\times\frac{1\text{ ft}^3\text{/s}}{449\text{ gal/min}} = 10.4\text{ ft/s}$$
$f_T = 0.016$ (Table 10.5)

10.34 $$\upsilon = \frac{Q}{A} = \frac{750\text{ L/min}}{3.09\times10^{-3}\text{ m}^2}\times\frac{1\text{ m}^3\text{/2}}{60000\text{ L/min}} = 4.045\text{ m/s}: \quad \frac{\upsilon^2}{2g} = \frac{(4.045)^2}{2(9.81)} = 0.834\text{ m}$$
Elbow $f_T = 0.018$ (Table 10.5)
$$\Delta p = \gamma h_L = \gamma\left[f_T\frac{L_e}{D}\frac{\upsilon^2}{2g}\right] = \frac{9.81\text{ kN}}{\text{m}^3}[0.018(30)(0.834\text{ m})] = \mathbf{4.42\ kPa}$$

10.35 **Street elbow:** $L_e/D = 50$ (See Prob. 10.34)
$\Delta p = \gamma h_L = (9.81)[(0.018)(50)(0.834)] = \mathbf{7.36\ kPa}$

10.36 **Long radius elbow:** $L_e/D = 20$ (See Prob. 10.34, 10.35)
$\Delta p = \gamma h_L = 9.81\ [(0.018)(20)(0.834)] = \mathbf{2.95\ kPa}$ Lowest
Δp is proportional to L_e/D.

10.37 Pt. 1 at inlet; Pt. 2 at outlet

$$\frac{p_1}{\gamma} + z_1 + \frac{\upsilon_1^2}{2g} - h_{L_{\text{pipe}}} - h_{L_{\text{bend}}} = \frac{p_2}{\gamma} + z_2 + \frac{\upsilon_2^2}{2g} : \ \upsilon_1 = \upsilon_2; \text{ assume } z_1 = z_2$$

$$p_1 - p_2 = \gamma\left(h_{L_{\text{pipe}}} + h_{L_{\text{bend}}}\right)$$

Close return bend: $L_e/D = 50$, $f_T = 0.027$ (Table 10.5)

$$\upsilon = \frac{Q}{A} = \frac{12.5 \text{ gal/min}}{0.00211 \text{ ft}^2} \times \frac{1 \text{ ft}^3\text{/s}}{449 \text{ gal/min}} = 13.19 \text{ ft/s}$$

$$N_R = \frac{\upsilon D \rho}{\mu} = \frac{(13.19)(0.0518)(2.13)}{3.38 \times 10^{-4}} = 4.31 \times 10^3$$

$D/\varepsilon = 0.0518/1.5 \times 10^{-4} = 345$: $f = 0.041$

$$h_{L_{\text{bend}}} = f_T \frac{L_e}{D}\frac{\upsilon^2}{2g} = (0.027)(50)\frac{(13.19)^2}{2(32.2)} \text{ ft} = 3.65 \text{ ft}$$

$$h_{L_{\text{tube}}} = f_T \frac{L}{D}\frac{\upsilon^2}{2g} = (0.041)\left[\frac{8.00}{0.0518}\right]\frac{(13.19)^2}{2(32.2)} = 17.12 \text{ ft}$$

$p_1 - p_2 = (68.47)[17.12 + 3.65]/144 =$ **9.87 psi**

10.38 3/4-in Steel tube, 0.065 in wall thickness

$D = 0.620$ in $= 0.05167$ ft; $A = 2.097 \times 10^{-3}$ ft^2

$$\upsilon = \frac{Q}{A} = \frac{(12.5/449) \text{ ft}^3\text{/s}}{2.097 \times 10^{-3} \text{ ft}^2} = 13.28 \text{ ft/s}$$

$$N_R = \frac{\upsilon D \rho}{\mu} = \frac{(13.28)(0.05167)(2.13)}{3.38 \times 10^{-4}} = 4.32 \times 10^3$$

$$D/\varepsilon = \frac{0.05167}{(1.5 \times 10^{-4})} = 344; f = 0.041$$

Use $f_T = 0.027$ because D/ε is the same as for the 1/2-in steel pipe in Problem 10.37.

90° Bend: $r = R_o - D_o/2 = 3.50 \text{ in} - 2.00/2 = 2.50$ in

$r/D = 2.50 \text{ in}/0.620 \text{ in} = 4.03$

Use $L_e/D = 14$ from Fig. 10.23

$$h_{L_{\text{bend}}} = 2f_T \frac{L_e}{D}\frac{\upsilon^2}{2g} = (2)(0.027)(14)\frac{(13.28)^2}{2(32.2)} = 2.07 \text{ ft (2 Bends)}$$

$$h_{L_{\text{tube}}} = f \frac{L}{D}\frac{\upsilon^2}{2g} = (0.041)\left[\frac{8.50}{0.05167}\right]\frac{(13.28)^2}{2(32.2)} = 18.46 \text{ ft}$$

See Problem 10.37:

$$p_1 - p_2 = \gamma\left[h_{L_{\text{tube}}} + h_{L_{\text{bend}}}\right] = (68.47)\,[18.46 + 2.07]/144$$

$p_1 - p_2 = 9.76$ psi (Virtually equal to Prob. 10.37)

10.39 $\upsilon = \frac{Q}{A} = \frac{0.40\ \text{ft}^3/\text{s}}{0.05132\ \text{ft}^2} = 7.79$ ft/s: **Tee-flow through run:** $\frac{L_e}{D} = 20$

$f_T = 0.018$ (Table 10.5)

$$h_L = f_T \frac{L_e}{D}\frac{\upsilon^2}{2g} = (0.018)(20)\frac{(7.79)^2}{2(32.2)} = \mathbf{0.340\ ft}$$

10.40 **Tee-flow through branch:** $L_e/D = 60$

$$\upsilon = \frac{Q}{A} = \frac{0.08\ \text{m}^3/\text{s}}{0.01365\ \text{m}^2} = 4.76\ \text{m/s}$$

$f_T = 0.018$ (Table 10.5)

$$h_L = f_T \frac{L_e}{D}\frac{\upsilon^2}{2g} = (0.018)(60)\frac{(4.76)^2}{2(9.81)} = \mathbf{1.25\ m}$$

10.41 **Pipe bend:** $R_o = 300$ mm; $r = R_o - D_o/2 = 300 - \frac{28.6}{2} = 285.7$ mm

$r/D = 0.2857\ \text{m}/0.0253\ \text{m} = 11.3 \rightarrow L_e/D = 32$ from Fig. 10.23.

$$\upsilon = \frac{Q}{A} = \frac{250\ \text{L/min}}{5.017\times10^{-4}\ \text{m}^2} \times \frac{1\ \text{m}^3/\text{s}}{60000\ \text{L/min}} = 8.31\ \text{m/s}$$

$$N_R = \frac{\upsilon D}{\nu} = \frac{(8.31)(0.0253)}{3.60\times10^{-7}} = 5.84\times10^5 : \frac{D}{\varepsilon} = \frac{0.0253}{1.5\times10^{-6}} = 16867:$$

$f_T = 0.0115$ in zone of complete turbulence

$$h_L = f_T \frac{L_e}{D}\frac{\upsilon^2}{2g} = (0.0115)(32)\frac{(8.31)^2}{2(9.81)} = \mathbf{1.29\ m}$$

10.42 **Pipe bend:** See Prob. 10.41 for some data.

For minimum energy loss, $r/D = 3$, $L_e/D = 11.8$ (Fig. 10.23)

$$r = \left(\frac{r}{D}\right)D = (3)(25.3\ \text{mm}) = \mathbf{76\ mm}$$

$$h_L = f_T \frac{L_e}{D}\frac{\upsilon^2}{2g} = (0.0115)(11.8)\frac{(8.31)^2}{2(9.81)} = 0.477\ \text{m}$$

10.43 **Proposal 1 - Pipe bend:** $\frac{r}{D} = \frac{750\text{ mm}}{49.8\text{ mm}} = 15.1;\ \frac{L_e}{D} = 40.5$ (Fig. 10.23)

$$\upsilon = \frac{Q}{A} = \frac{750\text{ L/min}}{1.945\times10^{-3}\text{ m}^2}\times\frac{1\text{ m}^3\text{/s}}{60000\text{ L/min}} = 6.43\text{ m/s}$$

$$N_R = \frac{\upsilon D\rho}{\mu} = \frac{(6.43)(0.0498)(802)}{1.92\times10^{-3}} = 1.34\times10^5;\ \frac{D}{\varepsilon} = \frac{0.0498}{1.5\times10^{-6}} = 33200:$$

$f = 0.017; f_T = 0.010$ in zone of complete turbulence

$$h_L = f_T\frac{L_e}{D}\frac{\upsilon^2}{2g} = (0.010)(40.5)\frac{(6.43)^2}{2(9.81)} = \mathbf{0.85\text{ m}}$$

Proposal 2 - Bend + tube: $\frac{r}{D} = \frac{150\text{ mm}}{49.8\text{ mm}} = 3.01:\ \frac{L_e}{D} = 11.8$

$$\left.\begin{aligned} h_{L_{bend}} &= f_T\frac{L_e}{D}\frac{\upsilon^2}{2g} = (0.010)(11.8)\frac{(6.43)^2}{2(9.81)} = 0.248\text{ m} \\ h_{L_{tube}} &= f\frac{L}{D}\frac{\upsilon^2}{2g} = (0.017)\frac{1.20}{0.0498}\frac{(6.43)^2}{2(9.81)} = 0.862\text{ m}\end{aligned}\right\}\ h_{L_{tot}} = 1.11\text{ m}$$

10.44 $\upsilon = \frac{Q}{A} = \frac{750\text{ L/min}}{1.905\times10^{-3}\text{ m}^2}\times\frac{1\text{ m}^3\text{/s}}{60000\text{ L/min}} = 6.56\text{ m/s}:\ \frac{\upsilon^2}{2g} = \frac{(6.56)^2}{2(9.81)} = 2.194\text{ m}$

$$N_R = \frac{\upsilon D\rho}{\mu} = \frac{(6.56)(0.0493)(802)}{1.92\times10^{-3}} = 1.35\times10^5$$

$D/\varepsilon = 0.0493/4.6\times10^{-5} = 1072:\ f = 0.0215:\ f_T = 0.019$

$$\left.\begin{aligned} h_{L_{elbow}} &= f_T\frac{L_e}{D}\frac{\upsilon^2}{2g} = (0.019)(30)(2.194\text{ m}) = 1.25\text{ m} \\ h_{L_{pipe}} &= f\frac{L}{D}\frac{\upsilon^2}{2g} = (0.0215)\left(\frac{1.40}{0.0493}\right)(2.194) = 1.340\text{ m}\end{aligned}\right\} h_{L_{total}} = 2.59\text{ m}$$

$\frac{2.59\text{ m}}{0.85\text{ m}} = 3.05$ times proposal 1.

$\frac{2.59\text{ m}}{1.11\text{ m}} = 2.33$ times proposal 2.

10.45 **Bend in tube:** $\frac{r}{D} = \frac{150\text{ mm}}{15.75\text{ mm}} = 9.52:\ \frac{L_e}{D} = 29$ (Fig. 10.23)

$$\upsilon = \frac{Q}{A} = \frac{40\text{ L/min}}{1.948\times10^{-4}\text{ m}^2}\times\frac{1\text{ m}^3\text{/s}}{60000\text{ L/min}} = 3.42\text{ m/s}$$

$\frac{D}{\varepsilon} = \frac{0.01575}{4.6\times10^{-5}} = 342:\ f_T = 0.025$ in zone of complete turbulence

$$h_L = f_T\frac{L_e}{D}\frac{\upsilon^2}{2g} = (0.025)(29)\frac{(3.42)^2}{2(9.81)} = \mathbf{0.432\text{ m}}$$

10.46 $\frac{p_1}{\gamma_w} + z_1 + \frac{\upsilon_1^2}{2g} - h_L = \frac{p_2}{\gamma_w} + z_2 + \frac{\upsilon_2^2}{2g}$

$h_L = \frac{p_1 - p_2}{\gamma_w} + z_1 - z_2 + \frac{\upsilon_1^2 - \upsilon_2^2}{2g}$

$A_1 = \frac{\pi D_1^2}{4} = \frac{\pi(0.050\text{ m})^2}{4} = 0.001963\text{ m}^2$

$A_2 = \frac{\pi D_2^2}{4} = \frac{\pi(0.10\text{ m})^2}{4} = 0.007854\text{ m}^2$

$z_1 - z_2 = -1.20\text{ m}$

$\upsilon_1 = \frac{Q}{A_1} = \frac{6.0\times10^{-3}\text{ m}^3/\text{s}}{0.001963\text{ m}^2} = 3.056\text{ m/s}: \quad \frac{\upsilon_1^2}{2g} = \frac{(3.056)^2}{2(9.81)} = 0.476\text{ m}$

$\upsilon_2 = \frac{Q}{A_2} = \frac{6.0\times10^{-3}}{0.007854} = 0.764\text{ m/s}: \quad \frac{\upsilon_2^2}{2g} = \frac{(0.764)^2}{2(9.81)} = 0.0297\text{ m}$

Manometer: $p_1 + \gamma_w(0.25\text{ m}) - \gamma_m(0.35\text{ m}) - \gamma_w(1.10\text{ m}) = p_2$

$p_1 - p_2 = \gamma_m(0.35\text{ m}) + \gamma_w(1.10 - 0.25)\text{m}$

$\frac{p_1 - p_2}{\gamma_w} = \frac{\gamma_m(0.35\text{ m})}{\gamma_w} + \frac{\gamma_w(0.85\text{ m})}{\gamma_w} = \frac{132.8(0.35\text{ m})}{9.69} + 0.85\text{ m}$

$\frac{p_1 - p_2}{\gamma_w} = 4.80\text{ m} + 0.85\text{ m} = 5.65\text{ m}$

Then $h_L = 5.65 - 1.20 + 0.476 - 0.0297 = 4.90\text{ m}$

Let $h_L = K\frac{\upsilon_1^2}{2g}$

Then $K = \frac{h_L}{\upsilon_1^2/2g} = \frac{4.90\text{ m}}{0.476\text{ m}} = \mathbf{10.3}$

10.47 90° Bend. Steel tube; '/i in OD x 0.065 in wall thickness.
$r = 2.00$ in. $D = 0.370$ in $= 0.03083$ ft.
$D/\varepsilon = 0.030S3/1.5 \times 10^{-4} = 206$. Then $f_T = 0.0295$ in fully turbulent zone. $A = 7.467 \times 10^{-4}\text{ ft}^2$.
$Q = 3.5$ gal/min $= 0.00780\text{ ft}^3/\text{s}$. $v = Q/A = (0.00780\text{ ft}^3/\text{s})/(0.00780\text{ ft}^2) = 10.44\text{ ft}^2$.
$(v^2/2g) = (10.44\text{ ft/s})^2/[2(32.2\text{ ft/s}^2)] = 1.692$ ft. $r/D = 2.00\text{ in}/0.370\text{ in} = 5.41$.
$L_e/D = 17$ (Fig. 10.27). $K = f_T/(L_e/D) = 0.0295(17) = 0.5015$.
$h_L = K(v^2/2g) = 0.5015(1.692\text{ ft}) = \mathbf{0.849\text{ ft} = h_L}$

10.48 90° Bend. Steel tube; 1 1/4 in OD × 0.083 in wall thickness.
$r = 3.25$ in. $D = 1.084$ in $= 0.09033$ ft.
$D/\varepsilon = 0.09033/1.5 \times 10^{-4} = 602$. Then $f_T = 0.023$ in fully turbulent zone. $A = 6.409 \times 10^{-3}\text{ ft}^2$.
$Q = 27.5$ gal/min $= 0.0612\text{ ft}^3/\text{s}$. $v = Q/A = (0.0612\text{ ft}^3/\text{s})/(0.006409\text{ ft}^2) = 9.556$ ft/s
$(v^2/2g) = (9.556\text{ ft/s})^2/[2(32.2\text{ ft/s}^2)] = 1.418$ ft. $r/D = 3.25\text{ in}/1.084\text{ in} = 3.00$.
$L_e/D = 12.5$ (Fig.10.27), $K = f_T/(L_e/D) = 0.023(12.5) = 0.288$.
$h_L = K(v^2/2g) = 0.288(1.418\text{ ft}) = \mathbf{0.408\text{ ft} = h_L}$

10.49 Data from Problem 10.47. Coil with 6.0 revolutions. $K = 0.5015$ for one 90° bend.
$n = 6.0$ rev(4 90° bends)/rev = 24 90° bends. $v^2/2g = 1.692$ ft. $r/D = 5.41$. $f_T = 0.0295$.
$K_B = (n - 1)\,[0.25\pi f_T(r/D) + 0.5K] + K$ [Equation 10-10]
$K_B = (24 - 1)[0.25\pi(0.0295)(5.41) + 0.5(0.5015)] + 0.5015 = \mathbf{9.15 = K_B}$
$h_L = K_B(v^2/2g) = (9.15)(1.692\text{ ft}) = \mathbf{15.5\text{ ft} = h_L}$

10.50 Data from Problem 10.48. Coil with 8.5 revolutions. $K = 0.288$ for one 90° bend.
$n = 8.5$ rev(4 90° bends)/rev = 34 90° bends. $v^2/2g = 1.418$ ft. $r/D = 3.00$. $f_T = 0.023$.
$K_B = (n-1)(0.25\pi f_T(r/D) + 0.5K] + K$ [Equation 10-10]
$K_B = (34-1)[0.25\text{m}(0.023)(3.00) + 0.5(0.288)] + 0.288 =$ **6.83 =** $\boldsymbol{K_B}$
$h_L = K_B(v^2/2g) = (6.83)(1.418) =$ **9.68 ft =** $\boldsymbol{h_L}$

10.51 Data from Problem 10.47. 145 degree bend. $K = 0.5015$ for one 90° bend.
$n = 145°/90° = 1.61$ 90° bends. $v^2/2g = 1.692$ ft. $r/D = 5.41$. $f_T = 0.0295$.
$K_B = (n-1)[0.25\pi f_T(r/D)) + 0.5K] + K$ [Equation 10-10]
$K_B = (1.61-1)\ [0.25\pi(0.0295)(5.41) + 0.5(0.5015)] + 0.5015 =$ **0.731 =** $\boldsymbol{K_B}$
$h_L = K_B(v^2/2g) = (0.731)(1.692\text{ ft}) =$ **1.25 ft =** $\boldsymbol{h_L}$

10.52 Data from Problem 10.48. 60 degree bend. $K = 0.288$ for one 90° bend.
$n = 60°/90° = 0.667$ 90° bends. $v^2/2g = 1.418$ ft. $r/D = 3.00$. $f_T = 0.023$.
$K_B = (n-1)[(0.25\pi f_T(r/D) + 0.5\text{K}] + K$ [Equation 10-10]
$K_B = (0.667-1)\ [0.25\text{m}(0.023)(3.00) + 0.5(0.288)] + 0.288 =$ **0.222 =** $\boldsymbol{K_B}$
$h_L = K_B(v^2/2g) = (0.222)(1.418) =$ **0.315 ft =** $\boldsymbol{h_L}$

10.53 Directional control valve. Figure 10.29. For $Q = 5$ gal/min, $\Delta p = 60$ psi.

10.54 Directional control valve. Figure 10.29. For $Q = 7.5$ gal/min, $\Delta p = 104$ psi.
For $Q = 10$ gal/min, $\Delta p = 175$ psi.

10.55 Find K if $\Delta p = \gamma h_L = \gamma K(v^2/2g)$. Then, $K = (\Delta p)/[\gamma(v^2/2g)]$ Dimensionless.
From Prob. 10.53: For $Q = 5$ gal/min, $\Delta p = 60$ psi = 8640 lb/ft^2.
5/8 OD tube with $t = 0.065$ in. $A = 1.336 \times 10^{-3}$ ft^2. $\gamma = 0.90(62.4\text{ lb/ft}^3) = 56.16$ 1b/ft^3.
$v = Q/A = [(5\text{ gpm})/(1\text{ ft}^3/\text{s}/449\text{ gpm})]/(1.336 \times 10^{-3}\text{ ft}^2) = 8.34$ ft/s
$(v^2/2g) = (8.34\text{ ft/s})^2/[2(32.2\text{ft/s}^2)] = 1.079$ ft
$K = (\Delta p)/[\gamma(v^2/2g)] = (8640\text{ lb/ft}^2)/[(56.16\text{ 1b/ft}^3)(1.079\text{ ft})] =$ **143 =** $\boldsymbol{K}$

10.56 Procedure like Prob. 10.55: For Q = 7.5 gal/min, $\Delta p = 104$ psi. $v = 12.5$ ft/s. $\boldsymbol{K}$ **= 110**
For $Q = 10$ gal/min, $\Delta p = 175$ psi. $v = 16.67$ fUs. $\boldsymbol{K}$ **= 104.**

10.57 Use Eq. 10-10. Solving for $C_v = Q/\sqrt{\Delta p/\text{sg}}$.
From Problem 10.53, $Q = 5.0$ gal/min, $\Delta p = 60.0$ psi, and sg = 0.90. Then,
$C_v = Q/\sqrt{\Delta p/\text{sg}} = 5.0/\sqrt{60/0.90} = 0.612 = C_v$

10.58 See Problem 10.57 for procedure and data from Problem 10.54.
For $Q = 7.5$ gal/min: $C_v = Q/\sqrt{\Delta p/\text{sg}} = 7.5/\sqrt{104/0.90} = 0.698 = C_v$
For $Q = 10.0$ gal/min: $C_v = Q/\sqrt{\Delta p/\text{sg}} = 10.0/\sqrt{175/0.90} = 0.717 = C_v$

For Problems 10.59 to 10.70, values of C, are found from Table 10.6.

10.59 $\Delta p = sg(Q/C_v)^2 = 0.981(150/170)^2 = 0.764$ psi
$sg = 61.2\text{ lb/ft}^3/62.4\text{ lb/ft}^3 = 0.981$

10.60 $\Delta p = sg(Q/C_v)^2 = 0.989(600/640)^2 = 0.869$ psi
$sg = 61.7 \text{ lb/ft}^3/62.4 \text{ lb/ft}^3 = 0.989$

10.61 $\Delta p = sg(Q/C_v)^2 = 0.997(15/25)^2 = 0.359$ psi
$sg = 62.2 \text{ lb/ft}^3/62.4 \text{ lb/ft}^3 = 0.997$

For Problems 10.62 to 10.70, values of sg are found from Appendix B.

10.62 $\Delta p = sg(Q/C_v)^2 = 1.590(60/90)^2 = 0.707$ psi

10.63 $\Delta p = sg(Q/C_v)^2 = 0.68(300/330)^2 = 0.562$ psi

10.64 $\Delta p = sg(Q/C_v)^2 = 0.495(5000/4230)^2 = 0.692$ psi

10.65 $\Delta p = sg(Q/C_v)^2 = 1.590(60/34)^2 = 4.952$ psi

10.66 $\Delta p = sg(Q/C_v)^2 = 0.68(300/160)^2 = 2.391$ psi

10.67 $\Delta p = sg(Q/C_v)^2 = 0.495(1500/700)^2 = 2.273$ psi

10.68 $\Delta p = sg(Q/C_v)^2 = 1.030(18/25)^2 = 0.534$ psi

10.69 $\Delta p = sg(Q/C_v)^2 = 0.823(300/330)^2 = 0.680$ psi

10.70 $\Delta p = sg(Q/C_v)^2 = 1.258(3500/2300)^2 = 2.913$ psi

CHAPTER ELEVEN

SERIES PIPE LINE SYSTEMS

Class I systems

11.1 **Class I**; Pt. A at tank surface: $\frac{p_A}{\gamma} + z_A + \frac{\upsilon_A^2}{2g} - h_L = \frac{p_B}{\gamma} + z_B + \frac{\upsilon_B^2}{2g}$: $p_A = 0$, $\upsilon_A = 0$

$$p_B = \gamma_w\left[z_A - z_B = \frac{\upsilon_B^2}{2g} - h_L\right] = \gamma_w\left[12\text{ m} - h_{\upsilon_B} - 1.0h_{\upsilon_B} - 3f_T(30)h_{\upsilon_B} - f\frac{L}{D}h_{\upsilon_B}\right]$$

Entr. 3 Elbows Friction

$$h_{\upsilon_B} = \text{Velocity head in pipe} = \frac{\upsilon_B^2}{2g} = \frac{1}{2g}\left(\frac{Q}{A}\right)^2 = \frac{(1.99\text{ m/s})^2}{2(9.81\text{ m/s}^2)} = 0.202\text{ m}$$

$N_R = \upsilon D/\nu = (1.99)(0.098)/(1.30 \times 10^{-6}) = 1.50 \times 10^5$

$D/\varepsilon = 0.098/1.5 \times 10^{-6} = 65300 \rightarrow f = 0.0165$;

$f_T \approx 0.010$ in zone of complete turbulence

$$p_B = \frac{9.81\text{ kN}}{\text{m}^3}\left[12\text{ m} - 0.202 - 0.202 - (3)(0.010)(30)(0.202) - (0.0165)\frac{80.5}{0.098}(0.202)\right]$$

$p_B = 85.1\text{ kN/m}^2 =$ **85.1 kPa**

11.2 **Class I**; $\frac{p_A}{\gamma} + z_A + \frac{\upsilon_A^2}{2g} - h_L = \frac{p_B}{\gamma} + z_B + \frac{\upsilon_B^2}{2g}$: $\upsilon_A = \upsilon_B = 0$; $p_B = 0$

$p_A = \gamma[z_B - z_A + h_L] = \gamma[4.5\text{ m} + h_L]$; $f_T = 0.019$

$$h_L = 1.0h_\upsilon + 100f_Th_\upsilon + 150f_Th_\upsilon + 30f_Th_\upsilon + 1.0h_\upsilon + f\frac{38}{0.0525}h_\upsilon = h_\upsilon[7.32 + 724f]$$

Ent. Chk. valve Ang. V. Elbow Exit Friction

$$h_\upsilon = \frac{\upsilon^2}{2g}\text{ (in pipe): } \upsilon = \frac{Q}{A} = \frac{435\text{ L/min}}{2.168\times10^{-3}\text{m}^2} \times \frac{1\text{ m}^3/\text{s}}{60000\text{ L/min}} = 3.344\text{ m/s}$$

$h_\upsilon = (3.344)^2/(2)(9.81) = 0.570$ m

$$N_R = \frac{\upsilon D\rho}{\mu} = \frac{(3.344)(0.0525)(820)}{1.70\times10^{-3}} = 8.47 \times 10^4;\ \frac{D}{\varepsilon} = \frac{0.0525}{4.6\times10^{-5}} = 1141; f = 0.0222$$

$p_A = \gamma[4.5\text{ m} + h_L] = (0.82)(9.81\text{ kN/m}^3)[4.5\text{ m} + 0.570\text{ m}(7.32 + 724(0.0222)]$
$=$ **143.5 kPa**

11.3 **Class I;** $\frac{P_A}{\gamma} + z_A + \frac{\upsilon_A^2}{2g} - h_L = \frac{p_B}{\gamma} + z_B + \frac{\upsilon_B^2}{2g}$: $p_A = p_B + \gamma[(z_B - z_A) + h_L]$

$\upsilon = \frac{Q}{A} = \frac{60 \text{ gal/min}}{0.02333 \text{ ft}^2} \times \frac{1 \text{ ft}^3/\text{s}}{449 \text{ gal/min}} = 5.73$ ft/s: $h_\upsilon = \frac{\upsilon^2}{2g} = \frac{(5.73)^2}{2(32.2)} = 0.509$ ft

$h_L = 6.5h_\upsilon + 2(30)f_T h_\upsilon + f\frac{50}{0.1723}h_\upsilon = (6.5 + 60f_T + 290f)h_\upsilon$: $f_T = 0.019$

$N_R = \frac{\upsilon D\rho}{\eta} = \frac{(5.73)(0.1723)(0.90)(1.94)}{6.0\times10^{-5}} = 2.87 \times 10^4$: $\frac{D}{\varepsilon} = \frac{0.1723}{1.5\times10^{-4}} = 1150$

$f = 0.0260$: Then $h_L = [6.5 + 60(0.019) + 290(0.0260)](0.509 \text{ ft}) = 7.73$ ft

$p_A = 200 \text{ psig} + \frac{(0.90)(62.4 \text{ lb})}{\text{ft}^3}[25 \text{ ft} + 7.73 \text{ ft}]\frac{1 \text{ ft}^2}{144 \text{ in}^2} = \mathbf{212.8 \text{ psig}}$

11.4 **Class I**

$\frac{P_A}{\gamma} + z_A + \frac{\upsilon_A^2}{2g} - h_L = \frac{p_B}{\gamma} + z_B + \frac{\upsilon_B^2}{2g}$

$p_A = p_B + \gamma_o\left[(z_B - z_A) + \frac{\upsilon_B^2 - \upsilon_A^2}{2g} + h_L\right]$

$\frac{\upsilon_A^2}{2g} = \frac{(20.9)^2}{2(32.2)}\text{ft} = 6.79$ ft; $\frac{\upsilon_B^2}{2g} = 1.32$ ft

$Q = 750 \text{ gal/min} \times \frac{1 \text{ ft}^3/\text{s}}{449 \text{ gal/min}} = 1.67 \text{ ft}^3/\text{s}$

$\upsilon_A = \frac{Q}{A_A} = \frac{1.67 \text{ ft}^3/\text{s}}{0.07986 \text{ ft}^2} = 20.9$ ft/s

$\upsilon_B = \frac{Q}{A_B} = \frac{1.67 \text{ ft}^3/\text{s}}{0.181 \text{ ft}^2} = 9.23$ ft/s

$f_T = 0.017$

$h_L = 2(30)f_T\frac{\upsilon_A^2}{2g} + f\frac{40 \text{ ft}}{0.3188 \text{ ft}}\frac{\upsilon_A^2}{2g} + 0.28\frac{\upsilon_A^2}{2g} = (1.30 + 125f)\frac{\upsilon_A^2}{2g}$

Elbows Friction Enlarge

Where $D_2/D_1 = 0.4801/0.3188 = 1.51 \rightarrow K = 0.28$ (Table 10.1)

At 100°F, $\nu_o = 7.21 \times 10^{-4}$ ft²/s; $N_{R_A} = \frac{\upsilon_A D_A}{\nu} = \frac{(20.9)(0.3188)}{7.21\times10^{-4}} = 9.25 \times 10^3$

$D/\varepsilon = 0.3188/1.5 \times 10^{-4} = 2125 \rightarrow f = 0.032$

$h_L = [1.30 + 125(0.032)](6.79 \text{ ft}) = 36.0$ ft

$p_A = 500 \text{ psig} + \frac{(0.895)(62.4 \text{ lb})}{\text{ft}^3}[4.0 + (1.32 - 6.79) + 36.0]\frac{\text{ft}(1 \text{ ft}^2)}{144 \text{ in}^2} = \mathbf{513.4 \text{ psig}}$

Similarly: At 210°F, $\nu = 7.85 \times 10^{-5}$; $N_R = 8.49 \times 10^4 \rightarrow f = 0.0205$

$h_L = 26.2$ ft; $p_A =$ **509.6 psig**

11.5 **Class I;** $\frac{p_A}{\gamma} + z_A + \frac{\upsilon_A^2}{2g} - h_L = \frac{p_B}{\gamma} + z_B + \frac{\upsilon_B^2}{2g}$,

Then $p_A = p_B + \gamma_o\left[(z_A - z_B) + \frac{\upsilon_B^2 - \upsilon_A^2}{2g} + h_L\right]$

$\upsilon_A = \frac{Q}{A_A} = \frac{0.015\ \text{m}^3/\text{s}}{1.682\times10^{-2}\ \text{m}^2} = 0.892$ m/s; $\frac{\upsilon_A^2}{2g} = \frac{0.892^2}{2(9.81)}$ m = 0.0405 m

$\upsilon_B = \frac{Q}{A_B} = \frac{0.015}{1.905\times10^{-3}} = 7.87$ m/s; $\frac{\upsilon_B^2}{2g} = \frac{(7.87)^2}{2(9.81)}$ m = 3.16 m

$N_{R_A} = \frac{\upsilon_A D_A}{\nu} = \frac{(0.892)(0.1463)}{2.12\times10^{-5}} = 6.15\times10^3$; $D/\varepsilon = \frac{0.1463}{4.6\times10^{-5}} = 3180$; $f_A = 0.035$

$N_{R_B} = \frac{\upsilon_B D_B}{\nu} = \frac{(7.87)(0.0493)}{2.12\times10^{-5}} = 1.83\times10^4$; $D/\varepsilon = \frac{0.0493}{4.6\times10^{-5}} = 1072$; $f_B = 0.028$

$f_{TB} = 0.019$

$h_L = f_A\frac{180}{0.1463}(0.0405) + 0.37(3.16) + 2(20)(f_{TB})(3.16) + f_B\frac{8}{0.0493}(3.16)$

Friction 6-in   Contr.   Elbows   Friction 2-in

Where $D_1/D_2 = 0.1463/0.0493 = 2.97$; $K = 0.37$, Table 10.3

$h_L = 19.68$ m

$p_A = 12.5\ \text{MPa} + \frac{8.80\ \text{kN}}{\text{m}^2}[4.5 + 3.16 - 0.0405 + 19.68]\text{m} = 12.5\ \text{MPa} + 240\ \text{kPa}$

$\mathbf{p_A = 12.74\ MPa}$

11.6 **Class I**

Pts. 1 and 2 at reservoir surfaces: $p_1 = p_2 = 0$; $\upsilon_1 = \upsilon_2 = 0$

$\frac{p_1}{\gamma} + z_1 + \frac{\upsilon_1^2}{2g} - h_L = \frac{p_2}{\gamma} + z_2 + \frac{\upsilon_2^2}{2g}$: $z_1 - z_2 = h_L$ = sum of 8 losses

Water at 10°C; $\nu = 1.30\times10^{-6}\ \text{m}^2/\text{s}$

3-in pipe: $\upsilon_3 = \frac{Q}{A_3} = 5.37$ m/s: $\frac{\upsilon_3^2}{2g} = 1.47$ m: $N_{R_3} = \frac{\upsilon_3 D_3}{\nu} = 3.48\times10^5$

$D_3/\varepsilon = 0.0843/1.2\times10^{-4} = 703$; $f_3 = 0.022$; $F_{T3} = 0.0215$

6-in pipe: $\upsilon_6 = \frac{Q}{A_6} = 1.57$ m/s: $\frac{\upsilon_6^2}{2g} = 0.126$ m; $N_{R_6} = \frac{\upsilon_6 D_6}{\nu} = 1.88\times10^5$

$D_6/\varepsilon = 0.1560/1.2\times10^{-4} = 1300$; $f_6 = 0.0205$; $f_{T6} = 0.0185$

$h_L = 1.0\frac{\upsilon_3^2}{2g} + f_3\frac{100}{0.0843}\frac{\upsilon_3^2}{2g} + 2(30)f_{T3}\frac{\upsilon_3^2}{2g} + 160f_{T3}\frac{\upsilon_3^2}{2g} + 0.43\frac{\upsilon_3^2}{2g} + f_6\frac{300}{0.1560}\frac{\upsilon_6^2}{2g}$

Entr.   Friction 3-in   Elbows 3-in   Gate valve   Enl.   Friction 6-in

$+ 2(30)f_{T6}\frac{\upsilon_6^2}{2g} + 1.0\frac{\upsilon_6^2}{2g}$

Elbows 6-in   Exit

$z_1 - z_2 = \sum h_L = 1.47 + 38.4 + 1.90 + 5.06 + 0.63 + 4.97 + 0.140 + 0.126$

$z_1 - z_2 = \mathbf{52.7\ m}$

11.7 **Class I**

$$\frac{p_A}{\gamma}+z_A+\frac{\upsilon_A^2}{2g}-h_L=\frac{p_B}{\gamma}+z_B+\frac{\upsilon_B^2}{2g}: \; p_A-p_B+\gamma\left[(z_B-z_A)+h_L\right]; \; \upsilon_A=\upsilon_B$$

$$\upsilon_A=\upsilon_B=\frac{Q}{A}=\frac{1.70\text{ L/min}}{8.189\times10^{-5}\text{m}^2}\times\frac{1\text{ m}^3/\text{s}}{60000\text{ L/min}}=0.346\text{ m/s}: \; \frac{\upsilon^2}{2g}=6.10\times10^{-3}\text{ m}$$

$$N_R=\frac{\upsilon D\rho}{\mu}=\frac{(0.346)(0.01021)(1250)}{3.0\times10^{-4}}=1.47\times10^4: \; \frac{D}{\varepsilon}=6807; f=0.0282; \; f_T=0.013$$

$$h_L=f\frac{30}{0.01021}\frac{\upsilon^2}{2g}+150\,f_T\frac{\upsilon^2}{2g}+340\,f_T\frac{\upsilon^2}{2g}+8(50)f_T\frac{\upsilon^2}{2g}=0.577\text{ m}$$

Friction   Ball chk.   Globe v.   8 Ret. bends

$$p_A-p_B=(1.25)(9.81\text{ kN/m}^3)[1.2\text{ m}+0.577\text{ m}]=\mathbf{21.79\text{ kPa}}$$

(See Computer solution on next page)

APPLIED FLUID MECHANICS	*I Pressure SI:* CLASS I SERIES SYSTEMS
Objective: ***Pressure: Point 2***	*Reference points for the energy equation:*
Problem 11.7-Mott-Modified Fig. 11.17	Pt. 1: In pipe at Point A Pt. 2: In pipe at Point B

System Data: **SI Metric Units**

Volume flow rate: Q =	*2.83E-05* m^3/s	*Elevation at point 1 =* *0 m*
Pressure at point 1 =	*100 kPa*	*Elevation at point 2 =* *1.2 m*
**Pressure at point 2 =*	*78.4 kPa*	If Ref. pt. is in pipe: Set v_1 "= B20" OR Set v_2 "= E20"
Velocity at point 1 =	*0.346 m/s -->*	Vel head at point 1 = 0.006104 m
Velocity at point 2 =	*0.346 m/s -->*	Vel head at point 2 = 0.006104 m

Fluid Properties: May need to compute: $\nu = \eta/\rho$

Specific weight = *12.2625* kN/m^3 *Kinematic viscosity =* *2.40E-07* m^2/s

Pipe 1: 1/2-in x 0.049 steel tube		***Pipe 2: None***		
Diameter: D =	*0.01021 m*	*Diameter: D =*	*0.09797 m*	
Wall roughness: ε *=*	*1.50E-06 m*	*Wall roughness:* ε *=*	*1.50E-06 m*	*See Table 8.2*
Length: L =	*30 m*	*Length: L =*	*0 m*	
Area: *A* =	8.19E-05 m^2	Area: *A* =	7.54E-03 m^2	$[A = \pi D^2/4]$
D/ε =	6807	D/ε =	65313	Relative roughness
L/D =	2938	*L/D* =	0	
Flow Velocity =	0.346 m/s	Flow Velocity =	0.0038 m/s	[v = Q/A]
Velocity head =	0.006104 m	Velocity head =	0.0000 m	
Reynolds No. =	1.47E+04	Reynolds No. =	1.53E+03	$[N_R = vD/\nu]$
Friction factor: *f* =	0.0282	Friction factor: *f* =	0.0563	Using Eq. 8-7

Energy losses-Pipe 1:	*K*	Qty.			
Pipe: $K_1 = f(L/D)$ =	82.96	1	Energy loss h_{L1} =	0.5064 m	Friction
Check Valve: K_2 =	*1.95*	*1*	Energy loss h_{L2} =	0.0119 m	(f_T = 0.013)
Globe Valve: K_3 =	*4.420*	*1*	Energy loss h_{L3} =	0.0270 m	(f_T = 0.013)
Return Bends: K_4 =	*0.65*	*8*	Energy loss h_{L4} =	0.0317 m	(f_T = 0.013)
Element 5: K_5 =	*0.00*	*1*	Energy loss h_{L5} =	0.00 m	
Element 6: K_6 =	*0.00*	*1*	Energy loss h_{L6} =	0.00 m	
Element 7: K_7 =	*0.00*	*1*	Energy loss h_{L7} =	0.00 m	
Element 8: K_8 =	*0.00*	*1*	Energy loss h_{L8} =	0.00 m	

Energy losses-Pipe 2:	*K*	Qty.			
Pipe: $K_1 = f(L/D)$ =	0.00	1	Energy loss h_{L1} =	0.00 m	Friction
Element 2: K_2 =	*0.00*	*1*	Energy loss h_{L2} =	0.00 m	
Element 3: K_3 =	*0.00*	*1*	Energy loss h_{L3} =	0.00 m	
Element 4: K_4 =	*0.00*	*1*	Energy loss h_{L4} =	0.00 m	
Element 5: K_5 =	*0.00*	*1*	Energy loss h_{L5} =	0.00 m	
Element 6: K_6 =	*0.00*	*1*	Energy loss h_{L6} =	0.00 m	
Element 7: K_7 =	*0.00*	*1*	Energy loss h_{L7} =	0.00 m	
Element 8: K_8 =	*0.00*	*1*	Energy loss h_{L8} =	0.00 m	

Total energy loss h_{Ltot} = 0.5770 m

Results:

Change in pressure A to B: **-21.79 kPa**

****NOTE: Pressure at point 1 set arbitrarily to 100 kPa.***
Pressure at point 2 is computed for illustration of effect of pressure drop.

Class II systems

11.8 **Class II** $h_L = 30.0\text{ ft} = f\dfrac{L}{D}\dfrac{\upsilon^2}{2g}$ **Method IIC Iteration**

Then $\upsilon = \sqrt{\dfrac{2gh_L D}{fL}} = \sqrt{\dfrac{2(32.2)(30)(0.3188)}{f(25)}} = \sqrt{\dfrac{24.64}{f}}$

$N_R = \dfrac{\upsilon D}{\nu} = \dfrac{\upsilon(0.3188)}{7.37\times10^{-6}} = 4.33\times10^4(\upsilon)$: $\dfrac{D}{\varepsilon} = \dfrac{0.3188}{1.5\times10^{-4}} = 2120$

Try f = 0.02; then $\upsilon = \sqrt{24.64/f} = 35.1$ ft/s

$N_R = 4.33\times10^4(35.1) = 1.52\times10^6$; **New f = 0.0165**

$\upsilon = \sqrt{24.64/0.0165}$ = **38.6 ft/s**; $N_R = 1.67\times10^6$; **f = 0.0165** OK

$Q = A\upsilon = (0.07986\text{ ft}^2)(38.6\text{ ft/s}) = \mathbf{3.08\ ft^3/s}$

Class II [Repeated using computational approach - Sec. 11.5]

$h_L = 30.0$ ft; $D/\varepsilon = 2120$; Use Eq. 11-3.

$$Q = -2.22D^2\sqrt{\frac{gDh_L}{L}}\log\left[\frac{1}{3.7D/\varepsilon} + \frac{1.784\nu}{D\sqrt{gDh_L/L}}\right]$$

$$Q = -2.22(0.3188)^2\sqrt{\frac{(32.2)(0.3188)(30)}{25}}\log\left[\frac{1}{3.7(2120)} + \frac{(1.784)(7.37\times10^{-6})}{(0.3188)\sqrt{12.32}}\right]$$

$Q = 3.05\text{ ft}^3/\text{s}$

11.9 **Class II** 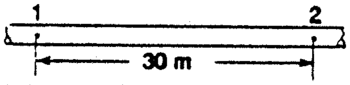

$$\frac{p_1}{\gamma} + z_1 + \frac{\upsilon_1^2}{2g} - h_L = \frac{p_2}{\gamma} + z_2 + \frac{\upsilon_2^2}{2g}:\quad z_1 = z_2;\ \upsilon_1 = \upsilon_2$$

Method IIC Iteration

$$h_L = \frac{p_1 - p_2}{\gamma} = \frac{68\text{ kN/m}^2}{((0.90)(9.81\text{ kN/m}^3))} = 7.70\text{ m} = f\frac{L}{D}\frac{\upsilon^2}{2g};\ \upsilon = \sqrt{\frac{2gh_L D}{fL}}$$

$$\upsilon = \sqrt{\frac{2(9.81)(7.70)(0.04658)}{f(30)}} = \sqrt{\frac{0.235}{f}}:\ \frac{D}{\varepsilon} = \frac{0.04658}{1.5\times10^{-6}} = 31053$$

Try f = 0.03; $\upsilon = \sqrt{0.235/0.03} = 2.80$ m/s

$$N_R = \frac{\upsilon D\rho}{\eta} = \frac{\upsilon(0.04658)(900)}{3.0\times10^{-3}} = 1.40\times10^4(\upsilon) = 3.92\times10^4$$

New f = 0.022; **υ = 3.27 m/s**; $N_R = 4.58\times10^4$; f = 0.0210

υ = **3.345 m/s**; $N_R = 4.69\times10^4$; f= 0.0210 **No change**

Spreadsheet solutions to Problems 11.8, 11.9, and 11.10 are on next page.

APPLIED FLUID MECHANICS	*II-A & II-B US:* CLASS II SERIES SYSTEMS
Objective: Volume flow rate	**Method II-A: No minor losses**
Problem 11.8	Uses Equation 11-3 to find maximum allowable volume flow rate to maintain desired pressure at point 2 for a given pressure at point 1

System Data:	**US Customary Units**				
Pressure at point 1 =	*112.917* psig		*Elevation at point 1 =*	*0* ft	
Pressure at point 2 =	*100* psig		*Elevation at point 2 =*	*0* ft	
Energy loss: h_L =	*30.00* ft				
Fluid Properties:	Water at 100F		May need to compute: $\nu = \eta/\rho$		
Specific weight =	*62.00 lb/ft³*		*Kinematic viscosity =*	*7.37E-06 ft²/s*	
Pipe data: 4-in Sch 40 steel pipe					
Diameter: D =	*0.3188 ft*				
Wall roughness: ε =	*1.50E-04 ft*				
Length: L =	*25 ft*		***Results: Maximum values***		
Area: *A* =	*0.07982* ft²		Volume flow rate: Q =	3.0546ft³/s	Using Eq. 11-3
D/ε =	*2125.33*		Velocity: v =	38.27ft/s	

APPLIED FLUID MECHANICS	*II-A & II-B US:* CLASS II SERIES SYSTEMS
Objective: Volume flow rate	**Method II-A: No minor losses**
Problem 11.9	Uses Equation 11-3 to find maximum allowable volume flow rate to maintain desired pressure at point 2 for a given pressure at point 1

System Data:	**SI Metric Units**				
Pressure at point 1 =	*168* kPa		*Elevation at point 1 =*	*0* m	
Pressure at point 2 =	*100* kPa		*Elevation at point 2 =*	*0* m	
Energy loss: h_L =	7.70 m				
Fluid Properties:			May need to compute: $\nu = \eta/\rho$		
Specific weight =	*8.83 kN/m³*		*Kinematic viscosity =*	*3.33E-06 m²/s*	
Pipe data: 2-in steel tube, t = 0.083					
Diameter: D =	*0.04658 ft*				
Wall roughness: ε =	*1.50E-06 ft*				
Length: L =	*30 ft*		***Results: Maximum values***		
Area: *A* =	0.001704 m²		Volume flow rate: Q =	0.0056m³/s	Using Eq. 11-3
D/ε =	31053.33		Velocity: v =	3.31m/s	

APPLIED FLUID MECHANICS	*II-A & II-B US:* CLASS II SERIES SYSTEMS
Objective: Volume flow rate	**Method II-A: No minor losses**
Problem 11.10	Uses Equation 11-3 to find maximum allowable volume flow rate to maintain desired pressure at point 2 for a given pressure at point 1

System Data:	**US Customary Units**				
Pressure at point 1 =	*250* psig		*Elevation at point 1 =*	*55* ft	
Pressure at point 2 =	*180* psig		*Elevation at point 2 =*	*0* ft	
Energy loss: h_L =	*202.22* ft				
Fluid Properties:	Ethyl glycol at 77F		May need to compute: $\nu = \eta/\rho$		
Specific weight =	*68.47 lb/ft³*		*Kinematic viscosity =*	*1.59E-06 ft²/s*	
Pipe data: 6-in coated ductile iron pipe					
Diameter: D =	*0.512 ft*				
Wall roughness: ε =	*4.00E-04 ft*				
Length: L =	*5000 ft*		***Results: Maximum values***		
Area: *A* =	*0.20589* ft²		Volume flow rate: Q =	1.4500ft³/s	Using Eq. 11-3
D/ε =	*1280*		Velocity: v =	7.04ft/s	

APPLIED FLUID MECHANICS	*II-A & II-B SI:* CLASS II SERIES SYSTEMS
Objective: Volume flow rate	**Method II-A: No minor losses**
Problem 11.11	Uses Equation 11-3 to find maximum allowable volume flow rate to maintain desired pressure at point 2 for a given pressure at point 1

System Data:	SI Metric Units			
Pressure at point 1 =	*550* kPa	*Elevation at point 1 =*	*7.5* m	
Pressure at point 2 =	*585* kPa	*Elevation at point 2 =*	*0* m	
Energy loss: h_L =	*3.93* m			
Fluid Properties:	Water at 15C	May need to compute: $\nu = \eta/\rho$		
Specific weight =	*9.81* kN/m^3	*Kinematic viscosity =*	*1.15E-06* m^2/s	
Pipe data:1-1/4x0.083 drawn steel pipe				
Diameter: D =	*0.02753* m			
Wall roughness: ε =	*1.50E-06* m			
Length: L =	*7.5* m	***Results: Maximum values***		
Area: *A* =	*0.000595* m^2	Volume flow rate: Q =	0.0023 m^3/s	Using Eq. 11-3
D/ε =	*18353.33*	Velocity: v =	3.91 m/s	

CLASS II SERIES SYSTEMS			*Volume flow rate: Q =*	*0.001793* m^3/s	
Method II-B: *Use results of Method IIA; Include minor losses; then pressure at Point 2 is computed*			Given: Pressure p_1 =	550 kPa	
			Pressure p_2 =	**585.01 kPa**	
			NOTE: Should be >	**585 kPa**	
Additional Pipe Data:			***Adjust estimate for Q until p_2 is equal or greater than desired.***		
L/D =	272				
Flow Velocity =	3.01 m/s		Velocity at point 1 =	3.01 m/s	|--> If velocity is in pipe:
Velocity head =	0.462 m		Velocity at point 2 =	3.01 m/s	|--> Enter "=B24"
Reynolds No. =	7.21E+04		Vel. head at point 1 =	0.462 m	
Friction factor: *f* =	0.0194		Vel. head at point 2 =	0.462 m	
Energy losses in Pipe:	*K*	Qty.			
Pipe: $K_1 = f(L/D)$ =	5.29	1	Energy loss h_{L1} =	2.45 m	Friction
Ball check value: K_2 =	*1.605*	*2*	Energy loss h_{L2} =	1.48 m	$f_T = 0.0107$
Element 3: K_3 =	*0.00*	*1*	Energy loss h_{L3} =	0.00 m	
Element 4: K_4 =	*0.00*	*1*	Energy loss h_{L4} =	0.00 m	
Element 5: K_5 =	*0.00*	*1*	Energy loss h_{L5} =	0.00 m	
Element 6: K_6 =	*0.00*	*1*	Energy loss h_{L6} =	0.00 m	
Element 7: K_7 =	*0.00*	*1*	Energy loss h_{L7} =	0.00 m	
Element 8: K_8 =	*0.00*	*1*	Energy loss h_{L8} =	0.00 m	
			Total energy loss h_{Ltot} =	3.93 m	

APPLIED FLUID MECHANICS	*II-A & II-B US:* CLASS II SERIES SYSTEMS
Objective: Volume flow rate	**Method II-A: No minor losses**
Problem 11.12	Uses Equation 11-3 to find maximum allowable volume flow rate to maintain desired pressure at point 2 for a given pressure at point 1

System Data:	**US Customary Units**				
Pressure at point 1 =	*120*	psig	*Elevation at point 1 =*	*0*	ft
Pressure at point 2 =	*105*	psig	*Elevation at point 2 =*	*20*	ft
Energy loss: h_L =	*19.85*	ft			
Fluid Properties:	Turpentine at 77F		May need to compute: $\nu = \eta/\rho$		
Specific weight =	*54.20*	*lb/ft³*	*Kinematic viscosity =*	*1.70E-05*	*ft²/s*
Pipe data: 3-in coated ductile iron pipe					
Diameter: D =	*0.277*	*ft*			
Wall roughness: ε =	*4.00E-04*	*ft*			
Length: L =	*60*	*ft*	***Results: Maximum values***		
Area: *A* =	*0.06026*	ft²	Volume flow rate: Q =	0.9782 ft³/s	Using Eq. 11-3
D/ε =	*692.5*		Velocity: v =	16.23 ft/s	

CLASS II SERIES SYSTEMS			*Volume flow rate: Q =*	*0.89850 ft³/s*	
Method II-B: *Use results of Method IIA; Include minor losses; then pressure at Point 2 is computed*			Given: Pressure p_1 =	120 psig	
			Pressure p_2 =	**105.00 psig**	
			NOTE: Should be >	**105 psig**	
Additional Pipe Data:			***Adjust estimate for Q until p_2 is equal or greater than desired.***		
L/D =	217				
Flow Velocity =	14.91 ft/s		Velocity at point 1 =	14.91 ft/s	|--> If velocity is in pipe:
Velocity head =	3.452 ft		Velocity at point 2 =	14.91 ft/s	|--> Enter "=B24"
Reynolds No. =	2.43E+05		Vel. head at point 1 =	3.45 ft	
Friction factor: *f* =	0.0226		Vel. head at point 2 =	3.45 ft	
Energy losses in Pipe:	*K*	Qty.			
Pipe: $K_1 = f(L/D)$ =	4.89	1	Energy loss h_{L1} =	16.90 ft	Friction
Long rad elbow: K_2 =	*0.43*	*2*	Energy loss h_{L2} =	2.97 ft	f_T = *0.0215*
Element 3: K_3 =	*0.00*	*1*	Energy loss h_{L3} =	2.45 ft	
Element 4: K_4 =	*0.00*	*1*	Energy loss h_{L4} =	0.00 ft	
Element 5: K_5 =	*0.00*	*1*	Energy loss h_{L5} =	0.00 ft	
Element 6: K_6 =	*0.00*	*1*	Energy loss h_{L6} =	0.00 ft	
Element 7: K_7 =	*0.00*	*1*	Energy loss h_{L7} =	0.00 ft	
Element 8: K_8 =	*0.00*	*1*	Energy loss h_{L8} =	0.00 ft	
			Total energy loss h_{Ltot} =	19.86 ft	

APPLIED FLUID MECHANICS	*II-A & II-B US:* CLASS II SERIES SYSTEMS
Objective: Volume flow rate	**Method II-A: No minor losses**
Problem 11.13 (a)	Uses Equation 11-3 to find maximum allowable volume flow rate
Figure 11.18	to maintain desired pressure at point 2 for a given pressure at point 1

System Data:	**US Customary Units**				
Pressure at point 1 =	*20* psig		*Elevation at point 1 =*	*0* ft	
Pressure at point 2 =	*0* psig		*Elevation at point 2 =*	*18* ft	
Energy loss: h_L =	*28.45* Ft				
Fluid Properties:	Turpentine at 77F	May need to compute: $\nu = \eta/\rho$			
Specific weight =	*62.00 lb/ft³*	*Kinematic viscosity =*	*7.37E-06 ft²/s*		
Pipe data: Smooth aluminum tube					
Diameter: D =	*0.417 ft*				
Wall roughness: ε =	*1.00E-08 ft*				
Length: L =	*20 ft*	***Results: Maximum values***			
Area: *A* =	*0.00137* ft²	Volume flow rate: Q =	0.0194 ft³/s	Using Eq. 11-3	
D/ε =	*4170000*	Velocity: v =	14.23 ft/s		

CLASS II SERIES SYSTEMS			*Volume flow rate: Q =*	*0.01107 ft³/s*	
Method II-B: *Use results of Method IIA;*			Given: Pressure p_1 =	20 psig	
Include minor losses;			**Pressure p_2 =**	**0.00 psig**	
then pressure at Point 2 is computed			***NOTE: Should be >***	**0 psig**	
Additional Pipe Data:			***Adjust estimate for Q until p_2***		
L/D =	480		***is equal or greater than desired.***		
Flow Velocity =	8.11 ft/s		Velocity at point 1 =	8.11 ft/s	|--> If velocity is in pipe:
Velocity head =	1.020 ft		Velocity at point 2 =	32.42 ft/s	|--> Enter "=B24"
Reynolds No. =	4.59E+04		Vel. head at point 1 =	1.02 ft	
Friction factor: *f* =	0.0212		Vel. head at point 2 =	16.32 ft	
Energy losses in Pipe:	*K*	Qty.			
Pipe: $K_1 = f(L/D)$ =	10.15	1	Energy loss h_{L1} =	10.36 ft	Friction
Bend: K_2 =	*0.34*	*1*	Energy loss h_{L2} =	0.35 ft	f_T = *0.01 Assumed*
**Nozzle:* K_3 =	*2.40*	*1*	Energy loss h_{L3} =	2.45 ft	
Element 4: K_4 =	*0.00*	*1*	Energy loss h_{L4} =	0.00 ft	
Element 5: K_5 =	*0.00*	*1*	Energy loss h_{L5} =	0.00 ft	
Element 6: K_6 =	*0.00*	*1*	Energy loss h_{L6} =	0.00 ft	
Element 7: K_7 =	*0.00*	*1*	Energy loss h_{L7} =	0.00 ft	
Element 8: K_8 =	*0.00*	*1*	Energy loss h_{L8} =	0.00 ft	
			Total energy loss h_{Ltot} =	13.15 ft	

***Nozzle K_3 restated in terms of velocity head in pipe rather than outlet velocity head.**
$*K_3 = 0.15(v_2/v_1)^2 = 0.15(4)^2 = 2.40$

Nozzle Velocity: **$v_N = v_p(A_p/A_N) = v_p(D_p/D_N)^2 = 4.0v_p = 4.0(8.11\text{ ft/s}) = 32.44\text{ ft/s}$**

APPLIED FLUID MECHANICS	*II-A & II-B US:* CLASS II SERIES SYSTEMS
Objective: Volume flow rate	**Method II-A: No minor losses**
Problem 11.13 (b)	Uses Equation 11-3 to find maximum allowable volume flow rate
Figure 11.18	to maintain desired pressure at point 2 for a given pressure at point 1

System Data: **US Customary Units**

Pressure at point 1 =	*80* psig	*Elevation at point 1 =*	*0* ft
Pressure at point 2 =	*0* psig	*Elevation at point 2 =*	*18* ft

Energy loss: h_L = *167.81* ft

Fluid Properties: Turpentine at 77F May need to compute: $\nu = \eta/\rho$

Specific weight = *62.00 lb/ft³* *Kinematic viscosity = 7.37E-06 ft²/s*

Pipe data: Smooth aluminum tube			
Diameter: D =	*0.417 ft*		
Wall roughness: ε =	*1.00E-08 ft*		
Length: L =	*20 ft*	***Results: Maximum values***	
Area: *A* =	*0.00137* ft²	Volume flow rate: Q =	0.0522 ft³/s Using Eq. 11-3
D/ε =	*4170000*	Velocity: v =	38.20 ft/s

CLASS II SERIES SYSTEMS		*Volume flow rate: Q =*	*0.02781 ft³/s*
Method II-B: *Use results of Method IIA;*		Given: Pressure p_1 =	80 psig
Include minor losses;		**Pressure p_2 =**	**0.01 psig**
then pressure at Point 2 is computed		***NOTE: Should be >***	**0 psig**
Additional Pipe Data:		***Adjust estimate for Q until p_2***	
L/D =	480	***is equal or greater than desired.***	
Flow Velocity =	20.36 ft/s	Velocity at point 1 =	20.36 ft/s |--> If velocity is in pipe:
Velocity head =	6.439 ft	Velocity at point 2 =	81.45 ft/s |--> Enter "=B24"
Reynolds No. =	1.15E+05	Vel. head at point 1 =	6.44 ft
Friction factor: *f* =	0.0173	Vel. head at point 2 =	103.02 ft

Energy losses in Pipe:	*K*	Qty.		
Pipe: $K_1 = f(L/D)$ =	8.32	1	Energy loss h_{L1} =	53.57 ft Friction
Bend: K_2 =	*0.34*	*1*	Energy loss h_{L2} =	2.19 ft *f_T = 0.01 Assumed*
**Nozzle: K_3 =*	*2.40*	*1*	Energy loss h_{L3} =	15.45 ft
Element 4: K_4 =	*0.00*	*1*	Energy loss h_{L4} =	0.00 ft
Element 5: K_5 =	*0.00*	*1*	Energy loss h_{L5} =	0.00 ft
Element 6: K_6 =	*0.00*	*1*	Energy loss h_{L6} =	0.00 ft
Element 7: K_7 =	*0.00*	*1*	Energy loss h_{L7} =	0.00 ft
Element 8: K_8 =	*0.00*	*1*	Energy loss h_{L8} =	0.00 ft
			Total energy loss h_{Ltot} =	71.21 ft

Nozzle K_3 restated in terms of velocity head in pipe rather than outlet velocity head.
$*K_3 = 0.15(v_2/v_1)^2 = 0.15(4)^2 = 2.40$

***Nozzle Velocity:* $v_N = v_p(A_p/A_N) = v_p(D_p/D_N)^2 = 4.0v_p = 4.0(20.36\ ft/s) = 32.44\ ft/s$**

APPLIED FLUID MECHANICS	*II-A & II-B SI:* CLASS II SERIES SYSTEMS
Objective: Volume flow rate	**Method II-A: No minor losses**
Problem 11.14	Uses Equation 11-3 to find maximum allowable volume flow rate
Figure 11.19	to maintain desired pressure at point 2 for a given pressure at point 1

System Data:	**SI Metric Units**				
Pressure at point 1 =	*150* kPa		*Elevation at point 1 =*	0 m	
Pressure at point 2 =	*0* kPa		*Elevation at point 2 =*	5 m	
Energy loss: h_L =	*13.59* m				
Fluid Properties:	Kerosene at 25C		May need to compute: $\nu = \eta/\rho$		
Specific weight =	*8.07 kN/m³*		*Kinematic viscosity =*	*1.99E-06 m²/s*	
Pipe data:2-in Type K Copper tube					
Diameter: D =	*0.0498 m*				
Wall roughness: ε *=*	*1.50E-06 m*				
Length: L =	*30 m*		***Results: Maximum values***		
Area: *A* =	*0.001948* m²		Volume flow rate: Q =	0.0098 m³/s	Using Eq. 11-3
D/ε =	*33200*		Velocity: v =	5.05 m/s	

CLASS II SERIES SYSTEMS			*Volume flow rate: Q = 0.008485 m³/s*		
Method II-B: *Use results of Method IIA;*			Given: Pressure p_1 =	150 kPa	
Include minor losses;			**Pressure p_2 =**	**0.01 kPa**	
then pressure at Point 2 is computed			***NOTE: Should be >***	**0 kPa**	
Additional Pipe Data:			***Adjust estimate for Q until p_2***		
L/D =	602		***is equal or greater than desired.***		
Flow Velocity =	4.36 m/s		Velocity at point 1 =	0.00 ft/s	|--> If velocity is in pipe:
Velocity head =	0.967 m		Velocity at point 2 =	4.36 ft/s	|--> Enter "=B24"
Reynolds No. =	109E+05		Vel. head at point 1 =	0.000 ft	
Friction factor: *f* =	0.0177		Vel. head at point 2 =	0.967 ft	
Energy losses in Pipe:	*K*	Qty.			
Pipe: $K_1 = f(L/D)$ =	10.69	1	Energy loss h_{L1} =	10.33 m	Friction
1/2 op. gate valve: K_2 =	*1.52*	*1*	Energy loss h_{L2} =	1.47 m	f_T = *0.0095*
Element 3: K_3 =	*0.50*	*1*	Energy loss h_{L3} =	0.48 m	
Element 4: K_4 =	*0.17*	*2*	Energy loss h_{L4} =	0.33 m	
Element 5: K_5 =	*0.00*	*1*	Energy loss h_{L5} =	0.00 m	
Element 6: K_6 =	*0.00*	*1*	Energy loss h_{L6} =	0.00 m	
Element 7: K_7 =	*0.00*	*1*	Energy loss h_{L7} =	0.00 m	
Element 8: K_8 =	*0.00*	*1*	Energy loss h_{L8} =	0.00 m	
			Total energy loss h_{Ltot} =	12.62 m	

11.14 **Class II** Pt. 1 at surface of tank A; Pt. 2 in stream outside pipe. $\upsilon_1 = 0, p_2 = 0$

$$\frac{p_1}{\gamma}+z_1+\frac{\upsilon_1^2}{2g}-h_L=\frac{p_2}{\gamma}+z_2+\frac{\upsilon_2^2}{2g}:\ \frac{p_1}{\gamma}+(z_1-z_2)=\frac{\upsilon_2^2}{2g}+h_L$$

$$\frac{150\ \text{kN/m}^2}{8.07\ \text{kN/m}^3}-5\ \text{m}=\boxed{13.59\ \text{m}=\frac{\upsilon_2^2}{2g}+h_L}\quad \text{(I)}$$ **Method IIC**

$$h_L=0.50\frac{\upsilon_2^2}{2g}+160f_T\frac{\upsilon_2^2}{2g}+2(18)f_T\frac{\upsilon_2^2}{2g}+f\frac{30\ \text{mm}}{0.0498\ \text{m}}\frac{\upsilon_2^2}{2g}=(2.46+602f)\frac{\upsilon_2^2}{2g}$$

Entrance Valve Bends Friction

$$\llcorner\ r/D=\frac{300\ \text{mm}}{49.8\ \text{mm}}=6.02\rightarrow\frac{L_e}{D}=18\ (\text{Fig. }10.23)$$

$$D/\varepsilon=\frac{0.0498\ \text{m}}{1.5\times10^{-6}\ \text{m}}=33200$$

$f_T = 0.010$ (Approx.)

In Eq. I:

$$13.59\ \text{m}=\frac{\upsilon_2^2}{2g}+(2.46+602f)\frac{\upsilon_2^2}{2g}=(3.46+602f)\frac{\upsilon_2^2}{2g}$$

$$\upsilon=\sqrt{\frac{2g(13.59\ \text{m})}{3.46+602f}}=\sqrt{\frac{2(9.81)(13.59)}{3.46+602f}}=\sqrt{\frac{266.6}{3.46+602f}}$$

Try $f = 0.02$

$$\upsilon=\sqrt{\frac{266.6}{3.46+602(0.02)}}=4.15\ \text{m/s};\ N_R=\frac{\upsilon D\rho}{\mu}=\frac{(4.15)(0.0498)(823)}{1.64\times10^{-3}}=1.04\times10^5$$

New $f = 0.018$; $\upsilon = 4.32$ m/s; $N_R = 1.08\times10^5$; New $f = 0.018$ **No change**

$Q = A\upsilon = (1.945\times10^{-3}\ \text{m}^2)(4.32\ \text{m/s}) = 8.40\times10^{-3}\ \text{m}^3/\text{s}$

11.15 **Class II with 2 pipes:** Pts. **A** and **B** at tank surfaces. **Method IIC**

$$\frac{p_A}{\gamma}+z_A+\frac{\upsilon_A^2}{2g}-h_L=\frac{p_B}{\gamma}+z_B+\frac{\upsilon_B^2}{2g}:\ z_A-z_B=h_L=10\ \text{m}:\quad p_A=p_B=0,\ \upsilon_A=\upsilon_B=0$$

$$h_L=1.0\frac{\upsilon_3^2}{2g}+2(30)f_{3T}\frac{\upsilon_3^2}{2g}+f_3\frac{55}{0.08432}\frac{\upsilon_3^2}{2g}+0.45\frac{\upsilon_3^2}{2g}$$ Based on 3-in pipe; $f_{3T} = 0.022$

Entrance Elbows Friction Enlarge. $\frac{D_2}{D_1}=\frac{0.156}{0.0843}=1.85$

$$+f_6\frac{30}{0.156}\frac{\upsilon_6^2}{2g}+30f_{6T}\frac{\upsilon_6^2}{2g}+45f_{6T}\frac{\upsilon_6^2}{2g}+1.0\frac{\upsilon_6^2}{2g}$$ Based on 6-in pipe; $f_{6T} = 0.019$

Friction Elbow Valve Exit

$$h_L=(2.77+652f_3)\frac{\upsilon_3^2}{2g}+(2.43+192f_6)\frac{\upsilon_6^2}{2g}$$

But $\upsilon_3=\upsilon_6\frac{A_6}{A_3}=\upsilon_6\left(\frac{D_6}{D_3}\right)^2=\upsilon_6\left(\frac{0.156}{0.0843}\right)^2=3.42\upsilon_6;\ \upsilon_3^2=11.73\upsilon_6^2$

$$h_L = (2.77 + 652f_3)\frac{11.73\upsilon_6^2}{2g} + (2.43 + 192f_6)\frac{\upsilon_6^2}{2g} = (34.9 + 7646f_3 + 192f_6)\frac{\upsilon_6^2}{2g}$$

Solve for υ_6

$$\upsilon_6 = \sqrt{\frac{2gh_L}{(34.9 + 7646f_3 + 192f_6)}} = \sqrt{\frac{2(9.81)(10)}{34.9 + 7646f_3 + 192f_6}}$$

$$= \sqrt{\frac{196.2}{34.6 + 7646f_3 + 192f_6}}$$

Iterate for both f_3 and f_6:

$$\frac{D_3}{\varepsilon} = \frac{0.0843\text{ m}}{1.2\times10^{-4}\text{ m}} = 703:\ N_{R_3} = \frac{\upsilon_3 D_3}{\nu} = \frac{\upsilon_3(0.0843)}{6.56\times10^{-7}} = 1.29\times10^5(\upsilon_3)$$

$$\frac{D_6}{\varepsilon} = \frac{0.1560}{1.2\times10^{-4}} = 1300:\ N_{R_6} = \frac{\upsilon_6 D_6}{\nu} = \frac{\upsilon_6(0.156)}{6.56\times10^{-7}} = 2.38\times10^5(\upsilon_6)$$

Try $f_3 = f_6 = 0.02$

$$\upsilon_6 = \sqrt{\frac{196.2}{34.9 + 7646(0.02) + 192(0.02)}} = 1.012\text{ m/s}$$

$\upsilon_3 = 3.42\upsilon_6 = 3.46$ m/s

$N_{R_3} = 1.29\times10^5(3.46) = 4.46\times10^5 \rightarrow$ New $f_3 = 0.0195$

$N_{R_6} = 2.38\times10^5(1.012) = 2.41\times10^5 \rightarrow$ New $f_6 = 0.020$

$$\upsilon_6 = \sqrt{\frac{196.2}{34.9 + 7646(0.0195) + 192(0.02)}} = \mathbf{1.02\ m/s}$$

$\upsilon_3 = 3.30\upsilon_6 =$ **3.51 m/s**

$N_{R_3} = 1.29 \times 10^5(3.50) = 4.20 \times 10^5 \rightarrow f_3 = 0.0195$ **No change**

$N_{R_6} = 2.38 \times 10^5(1.02) = 2.43 \times 10^5 \rightarrow f_6 = 0.020$ **No change**

$$Q = A_6\upsilon_6 = \frac{\pi(0.156\text{ m})^2}{4} \times 1.02\text{ m/s} = \mathbf{1.95 \times 10^{-3}\ m^3/s}$$

11.16 **Class II with two pipes** Pt. B in stream outside pipe. $p_B = 0$ **Method IIC**

$$\frac{p_A}{\gamma_o} + z_A + \frac{\upsilon_A^2}{2g} - h_L = \frac{p_B}{\gamma_o} + z_B + \frac{\upsilon_B^2}{2g} : \frac{p_A}{\gamma_o} + z_A - z_B = \frac{\upsilon_B^2 - \upsilon_A^2}{2g} + h_L$$

$$\frac{p_A}{\gamma_o} + z_A - z_B = \frac{175 \text{ kN/m}^2}{0.93(9.81 \text{ kN/m}^3)} - 4.5 \text{ m} = \boxed{14.68 \text{ m} = \frac{\upsilon_B^2}{2g} - \frac{\upsilon_A^2}{2g} + h_L} \quad (1)$$

$$h_L = f_2 \frac{30}{0.0498}\frac{\upsilon_A^2}{2g} + 0.52\frac{\upsilon_A^2}{2g} + f_4 \frac{100}{0.098}\frac{\upsilon_B^2}{2g} + 2(30)f_{T4}\frac{\upsilon_B^2}{2g} : f_{T4} = 0.010 \text{ approx.}$$

Friction(2-in) Enlarge. Friction (4-in) Elbows

$$D_2/D_1 = \frac{0.098}{0.0498} = 1.97$$

$$D_A/\varepsilon = 0.0498/1.5 \times 10^{-6} = 33200; \; N_{R_A} = \frac{\upsilon_A D_A \rho}{\mu} = \frac{\upsilon_A(0.0498)(930)}{9.50 \times 10^{-3}} = 4.88 \times 10^3(\upsilon_A)$$

$$D_B/\varepsilon = 0.098/1.5 \times 10^{-6} = 65333; \; N_{R_B} \frac{\upsilon_B D_B \rho}{\mu} = \frac{\upsilon_B(0.098)(930)}{9.5 \times 10^{-3}} = 9.59 \times 10^3(\upsilon_B)$$

$$h_L = (0.52 + 602f_2)\frac{\upsilon_A^2}{2g} + (0.6 + 1020f_4)\frac{\upsilon_B^2}{2g}$$

But $\upsilon_A = \upsilon_B \dfrac{A_B}{A_A} = \upsilon_B\left(\dfrac{D_B}{D_A}\right)^2 = \upsilon_B(1.97)^2 = 3.87\upsilon_B$: $\upsilon_A^2 = 15.0\upsilon_B^2$

Then: $h_L = (0.52 + 602f_2)\dfrac{15.0\upsilon_B^2}{2g} + (0.6 + 1020f_4)\dfrac{\upsilon_B^2}{2g} = \dfrac{\upsilon_B^2}{2g}[8.40 + 9030f_2 + 1020f_4]$

In Eq.(1)

$$14.68 = \frac{\upsilon_B^2}{2g} - \frac{15\upsilon_B^2}{2g} + \frac{\upsilon_B^2}{2g}[8.40 + 9030f_2 + 1020f_4] = \frac{\upsilon_B^2}{2g}[-5.60 + 9030f_2 + 1020f_4]$$

$$\upsilon_B = \sqrt{\frac{2g(14.68)}{-5.60 + 9030f_2 + 1020f_4}} = \sqrt{\frac{288.1}{-5.60 + 9030f_2 + 1020f_4}}$$ Iterate for both f_2 and f_4.

Try $f_2 = f_4 = 0.02$

$$\upsilon_B = \sqrt{\frac{288.1}{-5.60 + 9030(0.02) + 1020(0.02)}} = 1.21 \text{ m/s}; \; \upsilon_A = 3.87\upsilon_B = 4.69 \text{ m/s}$$

$N_{R_A} = 4.88 \times 10^3(4.69) = 2.29 \times 10^4$; $N_{R_B} = 9.59 \times 10^3(1.21) = 1.16 \times 10^4$

New $f_2 = 0.0255, f_4 = 0.0305$

$$\upsilon_B = \sqrt{\frac{288.1}{-5.60 + 9030(0.0255) + 1020(0.0305)}} = \mathbf{1.06 \text{ m/s}}; \; \upsilon_A = 3.87\upsilon_B = \mathbf{4.10 \text{ m/s}}$$

$N_{R_A} = 2.01 \times 10^4 \rightarrow f_2 = 0.0255$ **No change**; $N_{R_B} = 1.02 \times 10^4 \rightarrow f_4 = 0.0305$ **No change**

$Q = A_B\upsilon_B = (7.538 \times 10^{-3}\text{m}^2)(1.06 \text{ m/s}) = \mathbf{7.99 \times 10^{-3} \text{ m}^3\text{/s}}$

Class III systems

11.17 **Class III**

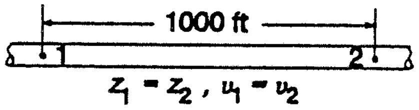

$$\frac{p_1}{\gamma} + z_1 + \frac{\upsilon_1^2}{2g} - h_L = \frac{p_2}{\gamma} + z_2 + \frac{\upsilon_2^2}{2g}$$

$$\frac{p_1 - p_2}{\gamma} = h_L = \frac{10.0\ \text{lb}\cdot\text{ft}^3\ 144\ \text{in}^2}{\text{in}^2\ (61.0\ \text{lb})\ \text{ft}^2} = 23.61\ \text{ft} = f\frac{L}{D}\frac{\upsilon^2}{2g} = \frac{fLQ^2 16}{D 2g\pi^2 D^4}$$

$$D = \left[\frac{8LQ^2}{\pi^2 g h_L} f\right]^{0.2} = \left[\frac{8(1000)(0.5)^2}{\pi^2(32.2)(23.61)} f\right]^{0.2} = (0.267f)^2$$

$$N_R = \frac{\upsilon D}{\nu} = \frac{4QD}{\pi D^2 \nu} = \frac{4(0.5)}{\pi(4.38\times10^{-6})D} = \frac{1.453\times10^5}{D}$$

Try $f = 0.02$

$D = [0.267(0.02)]^{0.2} = 0.351$ ft;

$$N_R = \frac{1.453\times10^5}{0.351} = 4.14\times10^5;\ \frac{D}{\varepsilon} = \frac{0.351}{1.5\times10^{-4}} = 2330$$

New $f = 0.0175$

$D = 0.342$ ft; $N_R = 4.25 \times 10^5$; $D/\varepsilon = 2279 \rightarrow f = 0.0175$ **No change**

└ Minimum Specify: **5-in Sch. 80 pipe**, $D = 0.4011$ ft

11.18 **Class III** Same method as Prob. 11.17.

$$D = \left[\frac{8LQ^2}{\pi^2 g h_L} f\right]^{0.2} = \left[\frac{8(30)(0.06)^2}{\pi^2(9.81)(15.74)} f\right]^{0.2} = [5.67\times10^{-4} f]^{0.2}$$

$$h_L = \frac{p_1 - p_2}{\gamma} = \frac{150\ \text{kN/m}^2}{9.53\ \text{kN/m}^3} = 15.74\ \text{m}$$

$$N_R = \frac{4Q}{\pi \nu D} = \frac{4(0.06)}{\pi(3.60\times10^{-7})D} = \frac{2.12\times10^5}{D}$$

Try $f = 0.02$

$D = [5.67 \times 10^{-4}(0.02)]^{0.2} = 0.103$ m;

$$N_R = \frac{2.12\times10^5}{0.103} = 2.07\times10^6;\ \frac{D}{\varepsilon} = \frac{0.103}{1.5\times10^{-6}} = 68400$$

New $f = 0.0105$

$D = 0.0901$ m; $N_R = 2.35 \times 10^6$; $\frac{D}{\varepsilon} = 60100 \rightarrow f = 0.0105$ **No change**

└ Minimum Specify **4-in type K copper tube**; $D = 97.97$ mm

APPLIED FLUID MECHANICS		III-A & III-B SI: CLASS III SERIES SYSTEMS	
Objective: Minimum pipe diameter		***Method III-A:*** *Uses Equation 11-13 to compute the minimum size of pipe of a given length that will flow a given volume flow rate of fluid with a limited pressure drop. (No minor losses)*	
Problem 11.18			
System Data: **SI Metric Units**		***Fluid Properties: Water at 80C***	
Pressure at point 1 =	*150* kPa	*Specific weight =*	*9.53* kN/m^3
Pressure at point 2 =	*0* kPa	*Kinematic Viscosity =*	*3.60E-07* m^2/s
Elevation at point 1 =	*0* m	**Intermediate Results in Eq. 11-13:**	
Elevation at point 2 =	*0* m		
Allowable Energy Loss: h_L =	15.74 m	L/gh_L =	0.194292
Volume flow rate: Q =	*0.06* m^3/s	Argument in bracket:	2.89E-22
Length of pipe: L =	*30* m	**Final Minimum Diameter:**	
Pipe wall roughness: ε =	*1.50E-06* m	Minimum diameter: D =	0.0908 m

Specify 4-in type K copper tube: D = 97.97 mm

APPLIED FLUID MECHANICS		III-A & III-B US: CLASS III SERIES SYSTEMS	
Objective: Minimum pipe diameter		***Method III-A:*** *Uses Equation 11-8 to compute the minimum size of pipe of a given length that will flow a given volume flow rate of fluid with a limited pressure drop. (No minor losses)*	
Example Problem 11.19			
System Data: **SI Metric Units**		***Fluid Properties: Water at 60F***	
Pressure at point 1 =	*0* psig	*Specific weight =*	*62.40* lb/ft^3
Pressure at point 2 =	*0* psig	*Kinematic Viscosity =*	*1.21E-05* ft^2/s
Elevation at point 1 =	*130* ft	**Intermediate Results in Eq. 11-8:**	
Elevation at point 2 =	*0* ft		
Allowable Energy Loss: h_L =	130.00 ft	L/gh_L =	2.522695
Volume flow rate: Q =	*30.067* ft^3/s	Argument in bracket:	6.22E-11
Length of pipe: L =	*10560* ft	**Final Minimum Diameter:**	
Pipe wall roughness: ε =	*4.00E-04* ft	Minimum diameter: D =	1.9556 ft

APPLIED FLUID MECHANICS		III-A & III-B US: CLASS III SERIES SYSTEMS	
Objective: Minimum pipe diameter		***Method III-A:*** *Uses Equation 11-8 to compute the minimum size of pipe of a given length that will flow a given volume flow rate of fluid with a limited pressure drop. (No minor losses)*	
Problem 11.17			
System Data: **SI Metric Units**		***Fluid Properties: Water at 160F***	
Pressure at point 1 =	*110* psig	*Specific weight =*	*61.00* lb/ft^3
Pressure at point 2 =	*100* psig	*Kinematic Viscosity =*	*4.38E-06* ft^2/s
Elevation at point 1 =	*0* ft	**Intermediate Results in Eq. 11-8:**	
Elevation at point 2 =	*0* ft		
Allowable Energy Loss: h_L =	23.61 ft	L/gh_L =	1.315562
Volume flow rate: Q =	*0.5* ft^3/s	Argument in bracket:	1.11E-07
Length of pipe: L =	*1000* ft	**Final Minimum Diameter:**	
Pipe wall roughness: ε =	*1.50E-04* ft	Minimum diameter: D =	0.3479 ft

Specify 5-in Sch. 80 steel pipe; D = 0.4100 ft

APPLIED FLUID MECHANICS		III-A & III-B US: CLASS III SERIES SYSTEMS	
Objective: Minimum pipe diameter		***Method III-A:*** *Uses Equation 11-8 to compute the minimum size of pipe of a given length that will flow a given volume flow rate of fluid with a limited pressure drop. (No minor losses)*	
Problem 11.20			
Figure 11.22			
System Data: **SI Metric Units**		***Fluid Properties: Water at 80F***	
Pressure at point 1 =	*0* psig	*Specific weight =*	*62.20* lb/ft^3
Pressure at point 2 =	*0* psig	*Kinematic Viscosity =*	*9.15E-06* ft^2/s
Elevation at point 1 =	*12* ft	**Intermediate Results in Eq. 11-8:**	
Elevation at point 2 =	*0* ft	L/gh_L =	0.194099
Allowable Energy Loss: h_L =	12.00 ft	Argument in bracket:	2.91E-09
Volume flow rate: Q =	*0.8909* ft^3/s	**Final Minimum Diameter:**	
Length of pipe: L =	*75* ft	Minimum diameter: D =	0.3007 ft
Pipe wall roughness: ε *=*	*1.50E-04* ft		

CLASS III SERIES SYSTEMS			*Specified pipe diameter: D =*	*0.4206* ft-min std sz
Method III-B: *Use results of Method III-A; Specify actual diameter; Include minor losses; then pressure at Point 2 is computed.*			5-in Sch 40 steel pipe	
			If velocity is in the pipe, enter "=B23" for value	
			Velocity at point 1 =	*0.00* ft/s
Additional Pipe Data:			Velocity at point 2 =	*6.41* ft/s
Flow area: A =	0.13894 ft^2		Vel. head at point 1 =	0.000 ft
Relative roughness: D/ε =	2804		Vel. head at point 2 =	0.638 ft
L/D =	178		***Results:***	
Flow Velocity =	6.41 ft/s		*Given pressure at point 1 =*	0 psig
Velocity head =	0.638 ft		*Desired pressure at point 2 =*	0 psig
Reynolds No. =	2.95E+05		***Actual pressure at point 2 =***	***2.28 psig***
Friction factor: f =	0.0175		***(Compare actual with desired pressure at point 2)***	
Energy losses in Pipe:	K	Qty.		
Pipe Friction: $K_1 = f(L/D)$ =	3.12	1	Energy loss h_{L1} =	1.99 ft
Entrance: K_2 =	*0.50*	*1*	Energy loss h_{L2} =	0.32 ft
Globe valve: K_3 =	*5.44*	*1*	Energy loss h_{L3} =	3.47 ft **f_T = 0.016**
Std. Elbow: K_4 =	*0.48*	*1*	Energy loss h_{L4} =	0.31 ft **f_T = 0.016**
Element 5: K_5 =	*0.00*	*1*	Energy loss h_{L5} =	0.00 ft
Element 6: K_6 =	*0.00*	*1*	Energy loss h_{L6} =	0.00 ft
Element 7: K_7 =	*0.00*	*1*	Energy loss h_{L7} =	0.00 ft
Element 8: K_8 =	*0.00*	*1*	Energy loss h_{L8} =	0.00 ft
			Total energy loss h_{Ltot} =	6.09 ft

Practice problems for any class

11.21 **Class I** Pt. 1 at tank surface, Pt. 2 in stream outside pipe: $p_1 = p_2 = 0$; $\upsilon_1 = 0$

$$\frac{p_1}{\gamma} + z_1 + \frac{\upsilon_1^2}{2g} - h_L = \frac{p_2}{\gamma} + z_2 + \frac{\upsilon_2^2}{2g}: \quad \boxed{z_1 - z_2 = \frac{\upsilon_2^2}{2g} + h_L} \quad ①$$

$$\upsilon_2 = \frac{Q}{A_2} = \frac{1500\text{ L/min}}{6.38\times10^{-3}\text{m}^2}\frac{1\text{ m}^3\text{/s}}{60000\text{ L/min}} = 3.92\text{ m/s}: \frac{\upsilon_2^2}{2\text{g}} = \frac{(3.92)^2}{2(9.81)} = 0.782\text{ m}$$

$f_T = 0.018$

$$h_L = 0.5\frac{\upsilon_2^2}{2g} + f_T(160)\frac{\upsilon_2^2}{2g} + f_T(30)\frac{\upsilon_2^2}{2g} = \frac{\upsilon_2^2}{2g}[0.5 + 190 f_T] = 0.782[0.5 + 190(0.018)]$$

$= 3.07$ m

In Eq. ①

$$z_1 - z_2 = \frac{\upsilon_2^2}{2g} + h_L = 0.782 + 3.07 = 3.85\text{ m}$$

But $h = z_1 - z_2 - 0.5$ m $= 3.85$ m $- 0.5$ m $=$ **3.35 m**

11.22 **Class I** Pt. 1 at collector tank surface. Pt. 2 at pump inlet. $p_1 = 0$, $\upsilon_1 = 0$

$$\frac{p_1}{\gamma} + z_1 + \frac{\upsilon_1^2}{2g} - h_L = \frac{p_2}{\gamma} + z_2 + \frac{\upsilon_2^2}{2g}: \quad \boxed{p_2 = \gamma\left[(z_1 - z_2) - h_L - \frac{\upsilon_2^2}{2g}\right]} \quad ①$$

$$Q = 30\text{ gal/min} \times \frac{1\text{ ft}^3\text{/s}}{449\text{ gal/min}} 1 = 0.0668\text{ ft}^3\text{/s} \qquad f_T = 0.019 \text{ for 2-in pipe}$$

$$\upsilon_2 = \frac{Q}{A_2} = \frac{0.0668\text{ ft}^3\text{/s}}{0.02333\text{ ft}^2} = 2.86\text{ ft/s}; \frac{\upsilon_2^2}{2\text{g}} = \frac{(2.86)^2}{2(32.2)} = 0.127\text{ ft}$$

$$h_L = 0.5\frac{\upsilon_2^2}{2g} + 1.85\frac{\upsilon_2^2}{2g} + f\frac{10.0\text{ ft}}{0.1723\text{ ft}}\frac{\upsilon_2^2}{2g} + f_T(8)\frac{\upsilon_2^2}{2g} = \frac{\upsilon_2^2}{2g}(2.50 + 58.0f)$$

Entrance Filter Friction Valve

$$N_R = \frac{\upsilon D\rho}{\mu} = \frac{(2.86)(0.1723)(0.92)(1.94)}{3.6\times10^{-5}} = 2.45\times10^4 : \frac{D}{\varepsilon} = \frac{0.1723}{1.5\times10^{-4}} = 1149$$

$f = 0.0265$

$h_L = (0.127\text{ ft})[2.50 + 58.0(0.0265)] = 0.513$ ft

In Eq.①:

$$p_2 = (0.92)\left(\frac{62.4\,lb}{\text{ft}^3}\right)[3.0 - 0.513 - 0.127]\frac{\text{ft ft}^2}{144\text{ in}^2} = \mathbf{0.94\text{ psig}}$$

11.23 **Class I** Pt. 1 at collector tank surface; Pt. 3 at upper tank surface. $p_1 = p_3 = 0$, $\upsilon_1 = \upsilon_3 = 0$

$$\frac{p_1}{\gamma} + z_1 + \frac{\upsilon_1^2}{2g} - h_L + h_A = \frac{p_3}{\gamma} + z_3 + \frac{\upsilon_3^2}{2g}: \; h_A = (z_3 - z_1) + h_L = 19.0\text{ ft} + h_L$$

$$h_L = h_{L_{suct.}} + h_{L_{disch.}} = 0.513\text{ ft} + f_{dT}(100)\frac{\upsilon_d^2}{2g} + f_d \frac{18\text{ ft}}{0.115\text{ ft}}\frac{\upsilon_2^2}{2g} + 1.0\frac{\upsilon_d^2}{2g}$$

From Prob. 11.22 — Ch. valve — Friction — Exit

$$\upsilon_d = \frac{Q}{A_d} = \frac{0.0668\text{ ft}^3/\text{s}}{0.01039\text{ ft}^2} = 6.43\text{ ft/s}: \; \frac{\upsilon_d^3}{2g} = \frac{(6.43)^2}{2(32.2)} = 0.642\text{ ft}$$

$$N_{R_d} = \frac{\upsilon_d D\rho}{\mu} = \frac{(6.43)(0.115)(0.92)(1.94)}{3.6\times10^{-5}} = 3.67\times10^4:$$

$$\frac{D}{\varepsilon} = \frac{0.115}{1.5\times10^{-4}} = 767 \rightarrow f = 0.0265; \; f_{dT} = 0.022$$

$h_L = 0.513\text{ ft} + (0.022)(100)(0.642) + (0.0265)(157)(0.642) + 1.0(0.642) = 5.24\text{ ft}$

$h_A = 19.0\text{ ft} + h_L = 19.0 + 5.24 = 24.24\text{ ft}$

$$\text{Power} = P_A = h_A\gamma Q = (24.24\text{ ft})(0.92)\left(\frac{62.4\,lb}{\text{ft}^3}\right)\left(\frac{0.0668\text{ ft}^3}{\text{s}}\right)\frac{1\text{ hp}}{550\text{ ft-lb/s}}2 = 0.169\text{ hp}$$

APPLIED FLUID MECHANICS		*III-A & III-B US:* CLASS III SERIES SYSTEMS	
Objective: Minimum pipe diameter		***Method III-A:*** *Uses Equation 11-8 to compute the*	
Problem 11.24		*minimum size of pipe of a given length*	
Figure 11.24 – Return System from upper tank		*that will flow a given volume flow rate of fluid*	
System Data: **SI Metric Units**		*with a limited pressure drop. (No minor losses)*	
Pressure at point 1 =	*0* psig	***Fluid Properties: Coolant – Given properties***	
Pressure at point 2 =	*0* psig	*Specific weight =*	*57.41*lb/ft³
Elevation at point 1 =	*9* ft	*Kinematic Viscosity =*	*2.02E-05*ft²/s
Elevation at point 2 =	*0* ft	**Intermediate Results in Eq. 11-8:**	
Allowable Energy Loss: h_L =	12.00 ft	L/gh$_L$ =	0.134576
Volume flow rate: Q =	*0.-6682* ft³/s	Argument in bracket:	1.37E-09
Length of pipe: L =	*39* ft	**Final Minimum Diameter:**	
Pipe wall roughness: ε =	*1.50E-04* ft	Minimum diameter: *D* =	0.1059ft

CLASS III SERIES SYSTEMS			Specified pipe diameter: D =	0.115 ft-min std sz
Method III-B: *Use results of Method III-A; Specify actual diameter; Include minor losses; then pressure at Point 2 is computed.*			5-in Sch 40 steel pipe	
			If velocity is in the pipe, enter "=B23" for value	
			Velocity at point 1 =	*0.00* ft/s
Additional Pipe Data:			Velocity at point 2 =	*6.43* ft/s
Flow area: A =	0.01039 ft^2		Vel. head at point 1 =	0.000 ft
Relative roughness: D/ε =	767		Vel. head at point 2 =	0.643 ft
L/D =	339		***Results:***	
Flow Velocity =	6.43 ft/s		*Given pressure at point 1 =*	0 psig
Velocity head =	0.643 ft		*Desired pressure at point 2 =*	0 psig
Reynolds No. =	3.67E+04		***Actual pressure at point 2 =***	***0.36 psig***
Friction factor: f =	0.0261		***(Compare actual with desired pressure at point 2)***	
Energy losses in Pipe:	K	Qty.		
Pipe Friction: $K_1 = f(L/D)$ =	8.84	1	Energy loss h_{L1} =	5.68 ft
Entrance: K_2 =	*1.00*	*1*	Energy loss h_{L2} =	0.64 ft
Elbows: K_3 =	*0.66*	*2*	Energy loss h_{L3} =	0.85 ft f_T = 0.022
Tee-flow thru run: K_4 =	*0.44*	*1*	Energy loss h_{L4} =	0.28 ft f_T = 0.022
Element 5: K_5 =	*0.00*	*1*	Energy loss h_{L5} =	0.00 ft
Element 6: K_6 =	*0.00*	*1*	Energy loss h_{L6} =	0.00 ft
Element 7: K_7 =	*0.00*	*1*	Energy loss h_{L7} =	0.00 ft
Element 8: K_8 =	*0.00*	*1*	Energy loss h_{L8} =	0.00 ft
			Total energy loss h_{Ltot} =	7.45 ft

11.25 **Class II** Computational approach, Eq. 11.12.

$$h_L = \frac{p_1 - p_2}{\gamma} = \frac{10.0\text{ lb}}{\text{in}^2}\cdot\frac{\text{ft}^3}{62.4\text{ lb}}\cdot\frac{144\text{ in}^2}{\text{ft}^2} = 23.08\text{ ft}$$

1-in Schedule 80 steel pipe; $D = 0.07975$ ft; $A = 0.00499$ ft^2

$D/\varepsilon = 0.07975/1.5 \times 10^{-4} = 532$

Water at 60°F; $\nu = 1.21 \times 10^{-5}$ ft^2/s

$Q = -2.22D^2$

$$= -2.22(0.07975)^2\sqrt{\frac{(32.2)(0.07975)(23.08)}{100}}\log\left[\frac{1}{3.7(532)} + \frac{(1.7841)(1.21\times10^{-5})}{(0.07975)\sqrt{0.5927}}\right]$$

$Q = 0.0333$ ft^3/s

$$\upsilon = \frac{Q}{A} = \frac{0.0333\text{ ft}^3/\text{s}}{0.00499\text{ ft}^2} = 6.68\text{ ft/s}$$

APPLIED FLUID MECHANICS		*II-A & II-B US:* CLASS II SERIES SYSTEMS	
Objective: Volume flow rate		**Method II-A: No minor losses**	
Problem 11.25		Uses Equation 11-3 to find maximum allowable volume flow rate to maintain desired pressure at point 2 for a given pressure at point 1	
System Data:	**US Customary Units**		
Pressure at point 1 =	*110* psig	*Elevation at point 1 =*	*0* ft
Pressure at point 2 =	*100* psig	*Elevation at point 2 =*	*0* ft
Energy loss: h_L =	*23.08* ft		
Fluid Properties:	Water at 60F	May need to compute: ν = η/ρ	
Specific weight =	*62.40 lb/ft³*	*Kinematic viscosity =*	*1.21E-05 ft²/s*
Pipe data: 3-in coated ductile iron pipe			
Diameter: D =	*0.07975 ft*		
Wall roughness: ε =	*1.50E-04 ft*		
Length: L =	*100 ft*	***Results: Maximum values***	
Area: *A* =	*0.00500* ft²	Volume flow rate: Q =	0.03332 ft³/s Using Eq. 11-3
D/ε =	*531.667*	Velocity: v =	6.67 ft/s

APPLIED FLUID MECHANICS	*III-A & III-B US:* CLASS III SERIES SYSTEMS
Objective: Minimum pipe diameter	***Method III-A:*** *Uses Equation 11-8 to compute the minimum size of pipe of a given length that will flow a given volume flow rate of fluid with a limited pressure drop. (No minor losses)*
Problem 11.26	
***System Data:* SI Metric Units**	***Fluid Properties: Gasoline at 77F***
Pressure at point 1 = *108* psig	*Specific weight =* *42.40* lb/ft^3
Pressure at point 2 = *100* psig	*Kinematic Viscosity =* *4.55E-06* ft^2/s
Elevation at point 1 = *0* ft	**Intermediate Results in Eq. 11-8:**
Elevation at point 2 = *0* ft	
Allowable Energy Loss: h_L = 27.17 ft	L/gh_L = 0.137164
Volume flow rate: Q = *0.22272* ft^3/s	Argument in bracket: 9.52E-16
Length of pipe: L = *120* ft	**Final Minimum Diameter:**
Pipe wall roughness: ε = *1.50E-04* ft	Minimum diameter: *D* = 0.1655 ft

CLASS III SERIES SYSTEMS			*Specified pipe diameter: D =*	*0.1723* ft-min std sz
Method III-B: *Use results of Method III-A; Specify actual diameter; Include minor losses; then pressure at Point 2 is computed.*			2-inch Sch 40 steel pipe	
			If velocity is in the pipe, enter "=B23" for value	
			Velocity at point 1 =	9.55 ft/s
Additional Pipe Data:			Velocity at point 2 =	9.55 ft/s
Flow area: *A* =	0.02332 ft^2		Vel. head at point 1 =	1.417 ft
Relative roughness: *D*/ε =	1149		Vel. head at point 2 =	1.417 ft
L/D =	696		***Results:***	
Flow Velocity =	9.55 ft/s		*Given pressure at point 1 =*	108 psig
Velocity head =	1.417 ft		*Desired pressure at point 2 =*	100 psig
Reynolds No. =	3.62E+05		***Actual pressure at point 2 =***	***102.18 psig***
Friction factor: *f* =	0.0200		***(Compare actual with desired pressure at point 2)***	
Energy losses in Pipe:	*K*	Qty.		
Pipe Friction: K_1 = f(L/D) =	13.94	1	Energy loss h_{L1} =	19.75 ft
Element 2: K_2 =	*0.00*	*1*	Energy loss h_{L2} =	0.00 ft
Element: K_3 =	*0.00*	*2*	Energy loss h_{L3} =	0.00 ft
Element 4: K_4 =	*0.00*	*1*	Energy loss h_{L4} =	0.00 ft
Element 5: K_5 =	*0.00*	*1*	Energy loss h_{L5} =	0.00 ft
Element 6: K_6 =	*0.00*	*1*	Energy loss h_{L6} =	0.00 ft
Element 7: K_7 =	*0.00*	*1*	Energy loss h_{L7} =	0.00 ft
Element 8: K_8 =	*0.00*	*1*	Energy loss h_{L8} =	0.00 ft
			Total energy loss h_{Ltot} =	19.75 ft

11.27 **Class I** $Q = 475$ L/min (1 m^3/s/60000 L/min) = 7.917×10^{-3}m^3/s
Pt. 1 at reservoir surface; Pt. 2 at pump inlet. $p_1 = 0$, $\upsilon_1 = 0$

$$\frac{p_1}{\gamma} + z_1 + \frac{\upsilon_1^2}{2g} - h_L = \frac{p_1}{\gamma} + z_2 + \frac{\upsilon_2^2}{2g}: \quad \boxed{p_2 = \gamma\left[(z_1 - z_2) - \frac{\upsilon_2^2}{2g} - h_L\right]} \quad ①$$

$$\upsilon_2 = \frac{Q}{A} = \frac{7.917\times10^{-3}\text{m}^3/\text{s}}{3.090\times10^{-3}\text{ m}^2} = 2.56\text{m/s}: \quad \frac{\upsilon_2^2}{2g} = \frac{(2.56)^2}{2(9.81)} = 0.335\text{ m}$$

$$h_L = \frac{\upsilon_2^2}{2g} + (0.0195)\frac{12.90\text{ m}}{0.0627\text{ m}}\frac{\upsilon_2^2}{2g} + (0.018)(2)(30)\frac{\upsilon_2^2}{2g} + (0.018)(340)\frac{\upsilon_2^2}{2g} = 4.09\text{ m}$$

Entrance Friction 2 Elbows Valve

$$N_R = \frac{\upsilon D}{\nu} = \frac{(2.56)(0.0627)}{3.60\times10^{-7}} = 4.46\times10^5 : \frac{D}{\varepsilon} = \frac{0.0627}{4.6\times10^{-5}} = 1363 \rightarrow f = 0.0195$$

$f_T = 0.018$

$L = 11.5$ m + 1.40 m = 12.90 m

$z_1 - z_2 = 0.75$ m − 1.40 m = 0.65 m

In Eq.①

$$p_2 = \frac{9.53\text{ kN}}{\text{m}^3}[-0.65\text{ m} - 0.335\text{ m} - 4.09\text{ m}] = -48.4\text{ kPa}$$

11.28 Design problem with variable solutions: Pressure at pump inlet can be increased by: lowering the pump, raising the reservoir, reducing the flow velocity in the pipe by using a larger pipe, reducing the h_L in the valve by using a less restrictive valve (gate, butterfly), eliminating elbows or using long-radius elbows, using a well-rounded entrance, and shortening the suction line.

11.29 **Class I** Pt. B in stream outside nozzle. $p_B = 0$

$$\frac{p_A}{\gamma} + z_A + \frac{\upsilon_A^2}{2g} - h_L + h_A = \frac{p_B}{\gamma} + z_B + \frac{\upsilon_B^2}{2g}$$

$$h_A = (z_B - z_A) + \frac{\upsilon_B^2 - \upsilon_A^2}{2g} - \frac{p_A}{\gamma} + h_L$$

In 2 1/2-in discharge line:

$$\upsilon_d = \frac{Q}{A_d} = \frac{0.50}{0.03326} = 15.03\text{ ft/s}$$

$$\frac{\upsilon_d^2}{2g} = \frac{(15.03)^2}{2(32.2)} = 3.509\text{ ft}$$

$$\upsilon_A = \frac{Q}{A_A} = \frac{0.50\text{ ft}^3/\text{s}}{0.05132\text{ ft}^2} = 9.743\text{ ft/s}$$

$$\frac{\upsilon_A^2}{2g} = \frac{(9.743)^2}{2(32.2)}\text{ ft} = 1.474\text{ ft}$$

$$\upsilon_B = \frac{Q}{A_B} = \frac{0.50}{\frac{\pi(1.3/12)^2}{4}} = 54.2\text{ ft/s}$$

$$\frac{\upsilon_B^2}{2g} = 45.7\text{ ft}$$

$$\rho = \frac{\gamma}{g} = \frac{64.0\text{ lb/ft}^3}{32.2\text{ ft/s}^2} = 1.988\ \frac{\text{slugs}}{\text{ft}^3}$$

$$N_{R_d} = \frac{\upsilon_d D\rho}{\mu} = \frac{(15.03)(0.2058)(1.988)}{4.0\times10^{-5}} = 1.54\times10^5$$

$D/\varepsilon = 0.2058/1.5\times10^{-4} = 1372 \rightarrow f = 0.0205$; $f_T = 0.018$

$$h_L = \underbrace{(0.0205)\frac{82\text{ ft}}{0.2058\text{ ft}}(3.509)}_{\text{Friction}} + \underbrace{0.018(30)(3.509)}_{\text{Elbow}} + \underbrace{32.6(3.51\text{ ft})}_{\text{Nozzle}} = 144.8\text{ ft}$$

Then $h_A = 80\text{ ft} + 45.7\text{ ft} - 1.474\text{ ft} - \frac{(-3.50\text{ lb})\text{ft}^3\,144\text{ in}^2}{\text{in}^2\,64.0\text{ lb ft}^2} + 144.8\text{ ft} = 276.9\text{ ft}$

Power $= P_A = h_A\gamma Q = (276.9\text{ ft})(64.0\text{ lb/ft}^3)(0.50\text{ ft}^3/\text{s})1\text{ hp}/550\text{ ft–lb/s} =$ **16.1 hp**

Input power $= P_I = P_A/e_M = (16.1\text{ hp})/0.76 =$ **21.2 hp =** $\boldsymbol{P_I}$

11.30 **Class I** See Problem 11.29. 3-in Sch. 40 discharge line. $f_T = 0.018$

$\upsilon_d = \upsilon_A = 9.743$ ft/s: $\frac{\upsilon_d^3}{2g} = 1.474\text{ ft}$

$$N_{R_d} = \frac{\upsilon_d D\rho}{\mu} = \frac{(9.743)(0.2557)(1.988)}{4.0\times10^{-5}} = 1.24\times10^5 :$$

$$\frac{D}{\varepsilon} = \frac{0.2557}{1.5\times10^{-4}} = 1705;\ f = 0.0205$$

$$h_L = (0.0205)\frac{82}{0.2557}(1.474) + 0.018(30)(1.474) + 32.6(1.474) = 58.5\text{ ft}$$

$h_A = 80 + 45.7 - 1.474 + 7.875 + 58.5 = 190.6\text{ ft}$

$P_A = h_A\gamma Q = (256.8)(64.0)(0.50)/550 =$ **11.1 hp**

Input power $= P_I = P_A/e_M = (11.1\text{ hp})/0.76 =$ **14.6 hp =** $\boldsymbol{P_I}$

11.31 **Class I** Pt. B outside pipe. $p_B = 0$, $\upsilon_B = \upsilon_A$.

$$\frac{p_A}{\gamma} + z_A + \frac{\upsilon_A^2}{2g} - h_L = \frac{p_B}{\gamma} + z_B + \frac{\upsilon_B^2}{2g} : p_A = \gamma[(z_B - z_A) + h_L]$$

$$h_L = \underbrace{f_T(340)\frac{\upsilon^2}{2g}}_{\text{Valve}} + \underbrace{f\frac{27.5\text{ m}}{0.0409\text{ m}}\frac{\upsilon^2}{2g}}_{\text{Friction}} + \underbrace{f_T(30)\frac{\upsilon^2}{2g}}_{\text{Elbow}} = [f(672) + f_T(370)]\frac{\upsilon^2}{2g}$$

$$\upsilon = \frac{Q}{A} = \frac{200\text{ L/min}}{1.31\times10^{-3}\text{ m}^2}\frac{1\text{ m}^3/\text{s}}{60000\text{ L/min}} = 2.54\text{ m/s}: \frac{\upsilon^2}{2g} = \frac{(2.54)^2}{2(9.81)} = 0.328\text{ m}$$

$$N_R = \frac{\upsilon D}{\nu} = \frac{(2.54)(0.0409)}{1.30\times10^{-6}} = 7.98\times10^4 : \frac{D}{\varepsilon} = \frac{0.0409}{4.6\times10^{-5}} = 889: f = 0.0235$$

$f_T = 0.021$

Then $h_L = [(0.0235)(672) + (0.021)(370)](0.328\text{ m}) = 7.73\text{ m}$

$p_A = \frac{9.81\text{ kN}}{m^3}[25\text{ m} + 7.73\text{ m}] =$ **321.1 kPa**

See spreadsheet on page 167 for solution to Problem 11.31 using the spreadsheet ***I Pressure SI.***

Problems 11.32 and 11.33 are solved using the spreadsheet on the following two pages. These problems are of the Class II type and are solved using the procedure described in Section 11.5. Method II-B is used because the system contains significant minor losses. In fact, one objective of these two problems is to compare the performance of two design approaches for the same system, using a different, more efficient valve in Problem 11.33 as compared with Problem 11.32.

Recall that Method II-A is set up and solved first in the spreadsheet. This ignores the minor losses and gives an upper limit for the volume flow rate that can be delivered through the system with a given pressure drop or head loss. Then, Method II-B is used iteratively to hone in on the maximum volume flow rate that can be carried with the minor losses considered. The designer enters a series of estimates for the value of Q and observes the resulting pressure at the outlet from the piping system. Obviously this pressure for this problem should be exactly zero because the pipe discharges into the free atmosphere. Each trial requires only a few seconds to complete and the designer should continue making estimates until the pressure at the outlet is at or close to zero.

Problem 11.32 shows that $Q = 0.00283\ m^3/s$ (170 L/min) can be delivered through the given system with a fully open globe valve installed and with a pressure of 300 kPa at point A at the water main.

In Problem 11.33, the globe valve is replaced with a fully open gate valve having much less energy loss. The result is that $Q = 0.003394\ m^3/s$ (204 L/min) can be delivered with the same pressure at point A. This is approximately a 20% increase in flow. Also, it is only about 3% less than the flow that could be delivered through the pipe with no minor losses at all, as shown in the results of Method II-A at the top of the spreadsheet.

APPLIED FLUID MECHANICS	*I Pressure SI:* CLASS I SERIES SYSTEMS		
Objective: ***Pressure: Point 2***	*Reference points for the energy equation:*		
Problem 11.31	Pt. 1: In pipe at Point A		
Fig. 11.27	Pt. 2: In pipe at Point B		

System Data: **SI Metric Units**

Volume flow rate: Q =	*3.33E-03 m^3/s*	*Elevation at point 1 =*	*0 m*
Pressure at point 1 =	*320.58 kPa*	*Elevation at point 2 =*	*25 m*
Pressure at point 2 =	*0.00 kPa*	If Ref. pt. is in pipe: Set v_1 "= B20" OR Set v_2 "= E20"	
Velocity at point 1 =	*2.537 m/s -->*	Vel head at point 1 =	0.328084 m
Velocity at point 2 =	*2.537 m/s -->*	Vel head at point 2 =	0.328084 m

Fluid Properties: Water at 10C May need to compute: $\nu = \eta/\rho$

Specific weight =	*9.81 kN/m^3*	*Kinematic viscosity =*	*1.30E-06 m^2/s*

Pipe 1: 1 1/2-in Sch 40 steel pipe		***Pipe 2: None***		
Diameter: D =	*0.0409 M*	*Diameter: D =*	*0.09797 m*	
Wall roughness: ε =	*4.60E-05 m*	*Wall roughness: ε =*	*1.50E-06 m*	*See Table 8.2*
Length: L =	*27.5 m*	*Length: L =*	*0 m*	
Area: *A* =	1.31E-03 m^2	Area: *A* =	7.54E-03 m^2	$[A = \pi D^2/4]$
D/ε =	889	*D/ε* =	65313	Relative roughness
L/D =	672	*L/D* =	0	
Flow Velocity =	2.537 m/s	Flow Velocity =	0.4422 m/s	[v = Q/A]
Velocity head =	0.328084 m	Velocity head =	0.0100 m	
Reynolds No. =	7.98E+04	Reynolds No. =	3.33E+04	$[N_R = vD/\nu]$
Friction factor: *f* =	0.0233	Friction factor: *f* =	0.0228	Using Eq. 8-7

Energy losses-Pipe 1:	*K*	Qty.			
Pipe: $K_1 = f(L/D)$ =	15.64	1	Energy loss h_{L1} =	5.13 m	Friction
Elbow: K_2 =	*0.63*	*1*	Energy loss h_{L2} =	0.21 m	$(f_T = 0.021)$
Globe Valve: K_3 =	*7.14*	*1*	Energy loss h_{L3} =	2.34 m	$(f_T = 0.021)$
Element 4: K_4 =	*0.00*	*1*	Energy loss h_{L4} =	0.00 m	
Element 5: K_5 =	*0.00*	*1*	Energy loss h_{L5} =	0.00 m	
Element 6: K_6 =	*0.00*	*1*	Energy loss h_{L6} =	0.00 m	
Element 7: K_7 =	*0.00*	*1*	Energy loss h_{L7} =	0.00 m	
Element 8: K_8 =	*0.00*	*1*	Energy loss h_{L8} =	0.00 m	
Energy losses-Pipe 2:	*K*	Qty.			
Pipe: $K_1 = f(L/D)$ =	0.00	1	Energy loss h_{L1} =	0.00 m	Friction
Element 2: K_2 =	*0.00*	*1*	Energy loss h_{L2} =	0.00 m	
Element 3: K_3 =	*0.00*	*1*	Energy loss h_{L3} =	0.00 m	
Element 4: K_4 =	*0.00*	*1*	Energy loss h_{L4} =	0.00 m	
Element 5: K_5 =	*0.00*	*1*	Energy loss h_{L5} =	0.00 m	
Element 6: K_6 =	*0.00*	*1*	Energy loss h_{L6} =	0.00 m	
Element 7: K_7 =	*0.00*	*1*	Energy loss h_{L7} =	0.00 m	
Element 8: K_8 =	*0.00*	*1*	Energy loss h_{L8} =	0.00 m	

	Total energy loss h_{Ltot} =	7.68 m
Results:	Total change in pressure =	**-320.58 kPa**
	Pressure at target point:	**320.58 kPa**

APPLIED FLUID MECHANICS	CLASS II SERIES SYSTEMS
Objective: Volume flow rate	**Method II-A: No minor losses**
Problem 11.32	Uses Equation 11-3 to estimate the allowable volume flow rate
Figure 11.27	to maintain desired pressure at point 2 for a given pressure at point 1

System Data:	**SI Metric Units**				
Pressure at point 1 =	*300*	kPa	*Elevation at point 1 =*	*0*	m
Pressure at point 2 =	*0*	kPa	*Elevation at point 2 =*	*25*	m
Energy loss: h_L =	5.58	m			
Fluid Properties:			May need to compute: $\nu = \eta/\rho$		
Specific weight =	*9.81*	*kN/m³*	*Kinematic viscosity =*	*1.30E-06*	*m²/s*
Pipe data:					
Diameter: D =	*0.0409*	*m*			
Wall roughness: ε =	*4.60E-05*	*m*			
Length: L =	*27.5*	*m*	***Results: Maximum values***		
Area: A =	*0.00131*	*m²*	Volume flow rate: Q =	0.0035	m³/s
D/ε =	*889.13*		Velocity: v =	2.66	m/s

CLASS II SERIES SYSTEMS			*Volume flow rate: Q =*	*0.00283*	*m³/s*
***Method II-B:** Use results of Method IIA;*			Given: Pressure p_1 =	300	kPa
Include minor losses;			**Pressure p_2 =**	**0.00**	**kPa**
then pressure at Point 2 is computed			***NOTE: Should be >***	**0**	**kPa**
Additional Pipe Data:			***Adjust estimate for Q until p_2***		
L/D =	672		***is greater than desired pressure.***		
Flow Velocity =	2.15	m/s	Velocity at point 1 =	2.15	m/s |--> If velocity is in pipe:
Velocity head =	0.236	m	Velocity at point 2 =	2.15	m/s |--> Enter "=B24"
Reynolds No. =	6.76E+04		Vel. head at point 1 =	0.236	m
Friction factor: f =	0.0237		Vel. head at point 2 =	0.236	m
Energy losses in Pipe 1:	*K*	Qty.			
Pipe: $K_1 = f(L/D)$ =	*15.91*	*1*	Energy loss h_{L1} =	3.75	m Friction
1 std. elbows: K_2 =	*0.63*	*1*	Energy loss h_{L2} =	0.15	m
Globe valve: K_3 =	*7.14*	*1*	Energy loss h_{L3} =	1.68	m
Element 4: K_4 =	*0.00*	*1*	Energy loss h_{L4} =	0.00	m
Element 5: K_5 =	*0.00*	*1*	Energy loss h_{L5} =	0.00	m
Element 6: K_6 =	*0.00*	*1*	Energy loss h_{L6} =	0.00	m
Element 7: K_7 =	*0.00*	*1*	Energy loss h_{L7} =	0.00	m
Element 8: K_8 =	*0.00*	*1*	Energy loss h_{L8} =	0.00	m
			Total energy loss h_{Ltot} =	5.58	m

APPLIED FLUID MECHANICS		CLASS II SERIES SYSTEMS	
Objective: Volume flow rate		**Method II-A: No minor losses**	
Problem 11.33		Uses Equation 11-3 to estimate the allowable volume flow rate	
Figure 11.27		to maintain desired pressure at point 2 for a given pressure at point 1	
System Data:	**SI Metric Units**		
Pressure at point 1 =	*300* kPa	*Elevation at point 1 =*	*0* m
Pressure at point 2 =	*0* kPa	*Elevation at point 2 =*	*25* m
Energy loss: h_L =	5.58 m		
Fluid Properties:		May need to compute: $\nu = \eta/\rho$	
Specific weight =	*9.81 kN/m³*	*Kinematic viscosity = 1.30E-06 m²/s*	
Pipe data:			
Diameter: D =	*0.0409 m*		
Wall roughness: ε =	*4.60E-05 m*		
Length: L =	*27.5 m*	***Results: Maximum values***	
Area: A =	*0.00131 m²*	Volume flow rate: Q =	0.0035 m³/s
D/ε =	*889.13*	Velocity: *v* =	2.66 m/s

CLASS II SERIES SYSTEMS			*Volume flow rate: Q =0.003394 m³/s = 203.6 L/min*	
Method II-B: *Use results of Method IIA;*			Given: Pressure p_1 =	300 kPa
Include minor losses;			**Pressure p_2 =**	**0.01 kPa**
then pressure at Point 2 is computed			***NOTE: Should be >***	**0 kPa**
Additional Pipe Data:			***Adjust estimate for Q until p_2***	
L/D =	672		***is greater than desired pressure.***	
Flow Velocity =	2.58 m/s		Velocity at point 1 =	2.58 m/s |--> If velocity is in pipe:
Velocity head =	0.340 m		Velocity at point 2 =	2.58 m/s |--> Enter "=B24"
Reynolds No. =	8.13E+04		Vel. head at point 1 =	0.340 m
Friction factor: *f* =	0.0232		Vel. head at point 2 =	0.340 m
Energy losses in Pipe 1:	*K*	Qty.		
Pipe: $K_1 = f(L/D)$ =	*15.61*	*1*	Energy loss h_{L1} =	5.31 m Friction
1 std. elbows: K_2 =	*0.63*	*1*	Energy loss h_{L2} =	0.21 m
Gate valve: K_3 =	*0.17*	*1*	Energy loss h_{L3} =	0.06 m
Element 4: K_4 =	*0.00*	*1*	Energy loss h_{L4} =	0.00 m
Element 5: K_5 =	*0.00*	*1*	Energy loss h_{L5} =	0.00 m
Element 6: K_6 =	*0.00*	*1*	Energy loss h_{L6} =	0.00 m
Element 7: K_7 =	*0.00*	*1*	Energy loss h_{L7} =	0.00 m
Element 8: K_8 =	*0.00*	*1*	Energy loss h_{L8} =	0.00 m
			Total energy loss h_{Ltot} =	5.58 m

11.34 **Class I** Pt. 1 at surface of tank A; Pt. 2 outside pipe in tank B. $\upsilon_1 = 0$

$$\frac{p_1}{\gamma} + z_1 + \frac{\upsilon_1^2}{2g} - h_L = \frac{p_1}{\gamma} + z_2 + \frac{\upsilon_2^2}{2g}: \quad \boxed{p_1 = p_2 + \gamma\left[(z_2 - z_1) + \frac{\upsilon_2^2}{2g} + h_L\right]} \quad ①$$

$$\upsilon_2 = \frac{Q}{A} = \frac{250 \text{ gal/min}}{0.02333 \text{ ft}^2} \cdot \frac{1 \text{ ft}^3\text{/s}}{449 \text{ gal/min}} = 23.87 \text{ ft/s}: \frac{\upsilon_2^2}{2\text{g}} = \frac{(23.87)^2}{2(32.2)} = 8.844 \text{ ft}$$

$$N_R = \frac{\upsilon D \rho}{\mu} = \frac{(23.87)(0.1723)(1.53)}{2.10 \times 10^{-5}} = 3.00 \times 10^5:$$

$$\frac{D}{\varepsilon} = \frac{0.1723}{1.5 \times 10^{-4}} = 1149 \rightarrow f = 0.0205$$

$$h_L = 0.5\frac{\upsilon_2^2}{2g} + f_T(160)\frac{\upsilon_2^2}{2g} + 2f_T(30)\frac{\upsilon_2^2}{2g} + f\left(\frac{110 \text{ ft}}{0.1723 \text{ ft}}\right)\frac{\upsilon_2^2}{2g}: f_T = 0.019$$

Entr. Valve 2 Elbows Friction

$$h_L = \frac{\upsilon_2^2}{2g}[4.68 + 638f] = 8.844 \text{ ft}[4.68 + 638(0.0205)] = 157.1 \text{ ft}$$

① $p_1 = 40.0 \text{ psig} + \frac{49.01 \text{ lb}}{\text{ft}^3}[20 \text{ ft} + 8.844 \text{ ft} + 157.1 \text{ ft}]\frac{1 \text{ ft}^2}{144 \text{ in}^2}$ = **103.3 psig**

APPLIED FLUID MECHANICS		*II-A & II-B US:* CLASS II SERIES SYSTEMS	
Objective: Volume flow rate		**Method II-A: No minor losses**	
Problem 11.35		Uses Equation 11-3 to find maximum allowable volume flow rate	
Figure 11.28		to maintain desired pressure at point 2 for a given pressure at point 1	
System Data:	**US Customary Units**		
Pressure at point 1 =	*125* psig	*Elevation at point 1 =*	*18* ft
Pressure at point 2 =	*40* psig	*Elevation at point 2 =*	*38* ft
Energy loss: h_L =	*229.74* ft		
Fluid Properties:	Ethyl Alcohol -77F	May need to compute: $\nu = \eta/\rho$	
Specific weight =	*49.01 lb/ft³*	*Kinematic viscosity = 1.37E-05 ft²/s*	
Pipe data: 2-in Sch 40 steel pipe			
Diameter: D =	*0.1723 ft*		
Wall roughness: ε =	*1.50E-04 ft*		
Length: L =	*110 ft*	***Results: Maximum values***	
Area: *A* =	*0.02332* ft²	Volume flow rate: Q =	0.7981 ft³/s Using Eq. 11-3
D/ε =	*1148.67*	Velocity: v =	34.23 ft/s

CLASS II SERIES SYSTEMS			*Volume flow rate: Q =*	*65990 ft³/s = 296.3 gal/min*
Method II-B: *Use results of Method IIA;*			Given: Pressure p_1 =	125 psig
Include minor losses;			**Pressure p_2 =**	**40.1 psig**
then pressure at Point 2 is computed			***NOTE: Should be >***	**40 psig**
Additional Pipe Data:			***Adjust estimate for Q until p_2***	
L/D =	638		***is equal or greater than desired.***	
Flow Velocity =	28.30 ft/s		Velocity at point 1 =	0.00 ft/s |--> If velocity is in pipe:
Velocity head =	12.438 ft		Velocity at point 2 =	28.30 ft/s |--> Enter "=B24"
Reynolds No. =	3.56E+05		Vel. head at point 1 =	0.00 ft
Friction factor: *f* =	0.0200		Vel. head at point 2 =	12.44 ft
Energy losses in Pipe:	*K*	Qty.		
Pipe: K_1 = f(L/D) =	12.79	1	Energy loss h_{L1} =	159.05 ft Friction
Std. Elbows: K_2 =	*0.57*	*1*	Energy loss h_{L2} =	14.18 ft $f_T = 0.019$
1/2 op gate valve: K_3 =	*3.04*	*1*	Energy loss h_{L3} =	37.81 ft $f_T = 0.019$
Entrance: K_4 =	*0.50*	*1*	Energy loss h_{L4} =	6.22 ft
Element 5: K_5 =	*0.00*	*1*	Energy loss h_{L5} =	0.00 ft
Element 6: K_6 =	*0.00*	*1*	Energy loss h_{L6} =	0.00 ft
Element 7: K_7 =	*0.00*	*1*	Energy loss h_{L7} =	0.00 ft
Element 8: K_8 =	*0.00*	*1*	Energy loss h_{L8} =	0.00 ft
			Total energy loss h_{Ltot} =	217.26 ft

APPLIED FLUID MECHANICS	II-A & II-B US: CLASS II SERIES SYSTEMS
Objective: Volume flow rate	**Method II-A: No minor losses**
Problem 11.36	Uses Equation 11-3 to find maximum allowable volume flow rate
Figure 11.28	to maintain desired pressure at point 2 for a given pressure at point 1

System Data:	**US Customary Units**		
Pressure at point 1 =	*125* psig	*Elevation at point 1 =*	*18* ft
Pressure at point 2 =	*40* psig	*Elevation at point 2 =*	*38* ft
Energy loss: h_L =	*229.74* ft		
Fluid Properties:	Ethyl Alcohol -77F	May need to compute: $\nu = \eta/\rho$	
Specific weight =	*49.01 lb/ft³*	*Kinematic viscosity = 1.37E-05 ft²/s*	
Pipe data: 2-in Sch 40 steel pipe			
Diameter: D =	*0.1723 ft*		
Wall roughness: ε =	*1.50E-04 ft*		
Length: L =	*110 ft*	***Results: Maximum values***	
Area: *A* =	*0.02332* ft²	Volume flow rate: Q =	0.7981 ft³/s Using Eq. 11-3
D/ε =	*1148.67*	Velocity: v =	34.23 ft/s

CLASS II SERIES SYSTEMS			*Volume flow rate: Q =*	*0.71960 ft³/s = 323.1 gal/min*
***Method II-B:** Use results of Method IIA;*			Given: Pressure p_1 =	125 Psig
Include minor losses;			**Pressure p_2 =**	**40.00 Psig**
then pressure at Point 2 is computed			***NOTE: Should be >***	**40 Psig**
Additional Pipe Data:			***Adjust estimate for Q until p_2***	
L/D =	638		***is equal or greater than desired.***	
Flow Velocity =	30.86 ft/s		Velocity at point 1 =	0.00 ft/s |--> If velocity is in pipe:
Velocity head =	14.790 ft		Velocity at point 2 =	30.86 ft/s |--> Enter "=B24"
Reynolds No. =	3.88E+05		Vel. head at point 1 =	0.00 ft
Friction factor: *f* =	0.0200		Vel. head at point 2 =	14.79 Ft
Energy losses in Pipe:	*K*	Qty.		
Pipe: $K_1 = f(L/D)$ =	12.74	1	Energy loss h_{L1} =	188.44 ft Friction
Std. Elbows: K_2 =	*0.570*	*2*	Energy loss h_{L2} =	16.86 ft f_T = *0.019*
Open gate valve: K_3 =	*0.152*	*1*	Energy loss h_{L3} =	2.25 ft f_T = *0.019*
Entrance: K_4 =	*0.500*	*1*	Energy loss h_{L4} =	7.40 ft
Element 5: K_5 =	*0.00*	*1*	Energy loss h_{L5} =	0.00 ft
Element 6: K_6 =	*0.00*	*1*	Energy loss h_{L6} =	0.00 ft
Element 7: K_7 =	*0.00*	*1*	Energy loss h_{L7} =	0.00 ft
Element 8: K_8 =	*0.00*	*1*	Energy loss h_{L8} =	0.00 ft
			Total energy loss h_{Ltot} =	214.95 ft

APPLIED FLUID MECHANICS	*II-A & II-B US:* CLASS II SERIES SYSTEMS
Objective: Volume flow rate	**Method II-A: No minor losses**
Problem 11.37	Uses Equation 11-3 to find maximum allowable volume flow rate
Figure 11.28 - Modified	to maintain desired pressure at point 2 for a given pressure at point 1

System Data:	**US Customary Units**		
Pressure at point 1 =	*125* psig	*Elevation at point 1 =*	*18* ft
Pressure at point 2 =	*40* psig	*Elevation at point 2 =*	*38* ft
Energy loss: h_L =	*229.74* ft		
Fluid Properties:	Ethyl Alcohol -77F	May need to compute: $\nu = \eta/\rho$	
Specific weight =	*49.01 lb/ft^3*	*Kinematic viscosity =*	*1.37E-05 ft^2/s*
Pipe data: 2-in Sch 40 steel pipe			
Diameter: D =	*0.1723 ft*		
Wall roughness: ε =	*1.50E-04 ft*		
Length: L =	*110 ft*	***Results: Maximum values***	
Area: *A* =	*0.02332* ft^2	Volume flow rate: Q =	0.7981 ft^3/s Using Eq. 11-3
D/ε =	*1148.67*	Velocity: v =	34.23 ft/s

CLASS II SERIES SYSTEMS		*Volume flow rate: Q =*	*0.72870 ft^3/s = 327.2 gal/min*
***Method II-B:** Use results of Method IIA;*		Given: Pressure p_1 =	125 Psig
Include minor losses;		**Pressure p_2 =**	**40.01 Psig**
then pressure at Point 2 is computed		***NOTE: Should be >***	**40 Psig**
Additional Pipe Data:		***Adjust estimate for Q until p_2***	
L/D =	638	***is equal or greater than desired.***	
Flow Velocity =	31.25 ft/s	Velocity at point 1 =	0.00 ft/s |--> If velocity is in pipe:
Velocity head =	15.167 ft	Velocity at point 2 =	31.25 ft/s |--> Enter "=B24"
Reynolds No. =	3.93E+05	Vel. head at point 1 =	0.00 ft
Friction factor: *f* =	0.0199	Vel. head at point 2 =	15.17 Ft

Energy losses in Pipe:	*K*	Qty.		
Pipe: $K_1 = f(L/D)$ =	12.73	1	Energy loss h_{L1} =	193.14 ft Friction
Long R. Elbows: K_2 =	*0.380*	*2*	Energy loss h_{L2} =	11.53 ft $f_T = 0.019$
Open gate valve: K_3 =	*0.152*	*1*	Energy loss h_{L3} =	2.31 ft $f_T = 0.019$
Entrance: K_4 =	*0.500*	*1*	Energy loss h_{L4} =	7.58 ft
Element 5: K_5 =	*0.00*	*1*	Energy loss h_{L5} =	0.00 ft
Element 6: K_6 =	*0.00*	*1*	Energy loss h_{L6} =	0.00 ft
Element 7: K_7 =	*0.00*	*1*	Energy loss h_{L7} =	0.00 ft
Element 8: K_8 =	*0.00*	*1*	Energy loss h_{L8} =	0.00 ft
			Total energy loss h_{Ltot} =	214.56 ft

APPLIED FLUID MECHANICS	*II-A & II-B SI:* CLASS II SERIES SYSTEMS
Objective: Volume flow rate	**Method II-A: No minor losses**
Problem 11.38	Uses Equation 11-3 to estimate the allowable volume flow rate
Figure 11.29	to maintain desired pressure at point 2 for a given pressure at point 1

System Data: **SI Metric Units**					
Pressure at point 1 =	*415*	kPa	*Elevation at point 1 =*	*0*	m
Pressure at point 2 =	*200*	kPa	*Elevation at point 2 =*	*0*	m
Energy loss: h_L =	21.92	m			
Fluid Properties:	Water at 15C		May need to compute: $\nu = \eta/\rho$		
Specific weight =	*9.81*	kN/m^3	*Kinematic viscosity =*	*1.15E-06*	m^2/s
Pipe data: 6-in Schedule 40 steel pipe					
Diameter: D =	*0.1023*	*m*			
Wall roughness: ε =	*4.60E-05*	*m*			
Length: L =	*100*	*m*	***Results: Maximum values***		
Area: A =	0.008219	m^2	Volume flow rate: Q =	0.0412	m^3/s Using Eq. 11-3
D/ε =	2224		Velocity: v =	5.02	m/s

CLASS II SERIES SYSTEMS			*Volume flow rate: Q =*	*0.034690*	m^3/s
Method II-B: *Use results of Method IIA;*			Given: Pressure p_1 =	415	kPa
Include minor losses;			**Pressure p_2 =**	**200.07**	**kPa**
then pressure at Point 2 is computed			***NOTE: Should be >***	**200**	**kPa**
Additional Pipe Data:			***Adjust estimate for Q until p_2***		
L/D =	978		***is greater than desired pressure.***		
Flow Velocity =	4.22	m/s	Velocity at point 1 =	0.00	m/s |--> If velocity is in pipe:
Velocity head =	0.908	m	Velocity at point 2 =	4.22	m/s |--> Enter "=B24"
Reynolds No. =	3.75E+05		Vel. head at point 1 =	0.000	m
Friction factor: f =	0.0178		Vel. head at point 2 =	0.908	m
Energy losses in Pipe:	*K*	Qty.			
Pipe: $K_1 = f(L/D)$ =	17.35	1	Energy loss h_{L1} =	15.75	m Friction
Globe valve: K_2 =	*5.78*	*1*	Energy loss h_{L2} =	5.25	m $f_T = 0.017$
Entrance: K_3 =	*0.00*	*1*	Energy loss h_{L3} =	0.00	m
Element 4: K_4 =	*0.00*	*1*	Energy loss h_{L4} =	0.00	m
Element 5: K_5 =	*0.00*	*1*	Energy loss h_{L5} =	0.00	m
Element 6: K_6 =	*0.00*	*1*	Energy loss h_{L6} =	0.00	m
Element 7: K_7 =	*0.00*	*1*	Energy loss h_{L7} =	0.00	m
Element 8: K_8 =	*0.00*	*1*	Energy loss h_{L8} =	0.00	m
			Total energy loss h_{Ltot} =	21.00	m

APPLIED FLUID MECHANICS	*II-A & II-B SI:* CLASS II SERIES SYSTEMS		
Objective: Volume flow rate	**Method II-A: No minor losses**		
Problem 11.39	Uses Equation 11-3 to estimate the allowable volume flow rate		
Figure 11.29 – Butterfly valve	to maintain desired pressure at point 2 for a given pressure at point 1		
System Data: SI Metric Units			
Pressure at point 1 =	*415* kPa	*Elevation at point 1 =*	*0* m
Pressure at point 2 =	*200* kPa	*Elevation at point 2 =*	*0* m
Energy loss: h_L =	21.92 m		
Fluid Properties:	Water at 15C	May need to compute: $\nu = \eta/\rho$	
Specific weight =	*9.81 kN/m³*	*Kinematic viscosity = 1.15E-06 m²/s*	
Pipe data: 4-in Schedule 40 steel pipe			
Diameter: D =	*0.1023 m*		
Wall roughness: ε =	*4.60E-05 m*		
Length: L =	*100 m*	***Results: Maximum values***	
Area: *A* =	0.008219 m²	Volume flow rate: *Q* =	0.0412 m³/s Using Eq. 11-3
D/ε =	2223.913	Velocity: *v* =	5.02 m/s

CLASS II SERIES SYSTEMS			*Volume flow rate: Q = 0.034690 m³/s*	
Method II-B: *Use results of Method IIA;*			Given: Pressure p_1 =	415 kPa
Include minor losses;			**Pressure p_2 =**	**200.07 kPa**
then pressure at Point 2 is computed			***NOTE: Should be >***	**200 kPa**
Additional Pipe Data:			***Adjust estimate for Q until p_2***	
L/D =	978		***is greater than desired pressure.***	
Flow Velocity =	4.22 m/s		Velocity at point 1 =	0.00 m/s |--> If velocity is in pipe:
Velocity head =	0.908 m		Velocity at point 2 =	4.22 m/s |--> Enter "=B24"
Reynolds No. =	3.75E+05		Vel. head at point 1 =	0.000 m
Friction factor: *f* =	0.0178		Vel. head at point 2 =	0.908 m
Energy losses in Pipe:	*K*	Qty.		
Pipe: $K_1 = f(L/D)$ =	17.35	1	Energy loss h_{L1} =	15.75 m Friction
Globe valve: K_2 =	*5.78*	*1*	Energy loss h_{L2} =	5.25 m $f_T = 0.017$
Entrance: K_3 =	*0.00*	*1*	Energy loss h_{L3} =	0.00 m
Element 4: K_4 =	*0.00*	*1*	Energy loss h_{L4} =	0.00 m
Element 5: K_5 =	*0.00*	*1*	Energy loss h_{L5} =	0.00 m
Element 6: K_6 =	*0.00*	*1*	Energy loss h_{L6} =	0.00 m
Element 7: K_7 =	*0.00*	*1*	Energy loss h_{L7} =	0.00 m
Element 8: K_8 =	*0.00*	*1*	Energy loss h_{L8} =	0.00 m
			Total energy loss h_{Ltot} =	21.00 m

APPLIED FLUID MECHANICS	*II-A & II-B SI:* **CLASS II SERIES SYSTEMS**
Objective: Volume flow rate	**Method II-A: No minor losses**
Problem 11.40 Figure 11.29 5-in pipe; Globe valve	Uses Equation 11-3 to estimate the allowable volume flow rate to maintain desired pressure at point 2 for a given pressure at point 1

System Data: **SI Metric Units**

Pressure at point 1 =	*415*	kPa	*Elevation at point 1 =*	*0*	m
Pressure at point 2 =	*200*	kPa	*Elevation at point 2 =*	*0*	m

Energy loss: h_L = 21.92 m

Fluid Properties: Water at 15C — May need to compute: $\nu = \eta/\rho$

Specific weight = 9.81 kN/m^3 — *Kinematic viscosity = 1.15E-06 m^2/s*

Pipe data: 5-in Sch 40 steel pipe	
Diameter: D = *0.1282 m*	
Wall roughness: ε *= 4.60E-05 m*	
Length: L = *100 m*	***Results: Maximum values***
Area: A = 0.012908 m^2	Volume flow rate: Q = 0.0746 m^3/s Using Eq. 11-3
D/ε = 2786.957	Velocity: v = 5.78 m/s

CLASS II SERIES SYSTEMS			*Volume flow rate: Q =*	*0.060570 m^3/s*	
Method II-B: *Use results of Method IIA;*			Given: Pressure p_1 =	415 kPa	
Include minor losses;			**Pressure p_2 =**	**200.04 kPa**	
then pressure at Point 2 is computed			***NOTE: Should be >***	**200 kPa**	
Additional Pipe Data:			***Adjust estimate for Q until p_2 is greater than desired pressure.***		
L/D =	780				
Flow Velocity =	4.69 m/s		Velocity at point 1 =	0.00 m/s	|--> If velocity is in pipe:
Velocity head =	1.122 m		Velocity at point 2 =	4.69 m/s	|--> Enter "=B24"
Reynolds No. =	5.23E+05		Vel. head at point 1 =	0.000 m	
Friction factor: f =	0.0168		Vel. head at point 2 =	1.122 m	
Energy losses in Pipe:	*K*	Qty.			
Pipe: $K_1 = f(L/D)$ =	13.09	1	Energy loss h_{L1} =	14.69 m	Friction
Globe valve: K_2 =	*5.440*	*1*	Energy loss h_{L2} =	6.10 m	f_T = 0.016
Entrance: K_3 =	*0.00*	*1*	Energy loss h_{L3} =	0.00 m	
Element 4: K_4 =	*0.00*	*1*	Energy loss h_{L4} =	0.00 m	
Element 5: K_5 =	*0.00*	*1*	Energy loss h_{L5} =	0.00 m	
Element 6: K_6 =	*0.00*	*1*	Energy loss h_{L6} =	0.00 m	
Element 7: K_7 =	*0.00*	*1*	Energy loss h_{L7} =	0.00 m	
Element 8: K_8 =	*0.00*	*1*	Energy loss h_{L8} =	0.00 m	
			Total energy loss h_{Ltot} =	20.79 m	

APPLIED FLUID MECHANICS	*II-A & II-B SI:* **CLASS II SERIES SYSTEMS**
Objective: Volume flow rate	**Method II-A: No minor losses**
Problem 11.41	Uses Equation 11-3 to estimate the allowable volume flow rate
Figure 11.29-5 in pipe Butterfly	to maintain desired pressure at point 2 for a given pressure at point 1

System Data: **SI Metric Units**

Pressure at point 1 =	*415*	kPa	*Elevation at point 1 =*	*0*	m
Pressure at point 2 =	*200*	kPa	*Elevation at point 2 =*	*0*	m

Energy loss: h_L = 21.92 m

Fluid Properties: Water at 15C — May need to compute: $\nu = \eta/\rho$

Specific weight = 9.81 kN/m^3 — *Kinematic viscosity = 1.15E-06 m^2/s*

Pipe data: 6-in Schedule 40 steel pipe

Diameter: D =	*0.1282 m*				
Wall roughness: ε =	*4.60E-05 m*				
Length: L =	*100 m*	***Results: Maximum values***			
Area: *A* =	0.012908 m^2	Volume flow rate: Q =	0.0746 m^3/s	Using Eq. 11-3	
D/ε =	2786.957	Velocity: *v* =	5.78 m/s		

CLASS II SERIES SYSTEMS	*Volume flow rate: Q = 0.069810 m^3/s*
Method II-B: *Use results of Method IIA;*	Given: Pressure p_1 = 415 kPa
Include minor losses;	**Pressure p_2 = 200.03 kPa**
then pressure at Point 2 is computed	***NOTE: Should be >*** **200 kPa**

Additional Pipe Data: — ***Adjust estimate for Q until p_2 is greater than desired pressure.***

L/D =	780		
Flow Velocity =	5.41 m/s	Velocity at point 1 =	0.00 m/s |--> If velocity is in pipe:
Velocity head =	1.491 m	Velocity at point 2 =	5.41 m/s |--> Enter "=B24"
Reynolds No. =	6.03E+05	Vel. head at point 1 =	0.000 m
Friction factor: *f* =	0.0166	Vel. head at point 2 =	1.491 m

Energy losses in Pipe:	*K*	Qty.		
Pipe: K_1 = f(L/D) =	12.98	1	Energy loss h_{L1} = 19.35 m	Friction
Butterfly valve: K_2 =	*0.720*	*1*	Energy loss h_{L2} = 1.07 m	*f_T = 0.016*
Entrance: K_3 =	*0.00*	*1*	Energy loss h_{L3} = 0.00 m	
Element 4: K_4 =	*0.00*	*1*	Energy loss h_{L4} = 0.00 m	
Element 5: K_5 =	*0.00*	*1*	Energy loss h_{L5} = 0.00 m	
Element 6: K_6 =	*0.00*	*1*	Energy loss h_{L6} = 0.00 m	
Element 7: K_7 =	*0.00*	*1*	Energy loss h_{L7} = 0.00 m	
Element 8: K_8 =	*0.00*	*1*	Energy loss h_{L8} = 0.00 m	
			Total energy loss h_{Ltot} = 20.42 m	

11.42 **Class I** Note: Pump delivers **1.0 in³/rev**

$$Q = \frac{1.0 \text{ in}^3}{\text{rev}} \times \frac{2100 \text{ rev}}{\text{min}} \times \frac{\text{ft}^3}{1728 \text{ in}^3} \times \frac{\text{min}}{60 \text{ s}} = 0.0203 \text{ ft}^3/\text{s}$$

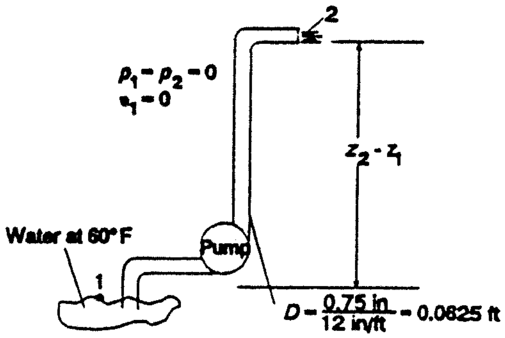

$$\frac{p_1}{\gamma} + z_1 + \frac{v_1^2}{2g} - h_L + h_A = \frac{p_1}{\gamma} + z_2 + \frac{v_2^2}{2g}$$

$$z_2 - z_1 = h_A - h_L - \frac{v^2}{2g}$$

Power = $P_A = h_A\gamma Q$ and $e = \frac{P_A}{P_I}$

Then $P_A = eP_I = (0.75)(0.20 \text{ hp})\frac{550 \text{ ft-lb/s}}{\text{hp}} = 82.5 \text{ ft-lb/s}$

$$h_A = \frac{P_A}{\gamma Q} = \frac{82.5 \text{ ft-lb/s}}{\left(\frac{62.4 \text{ lb}}{\text{ft}^3}\right)\left(\frac{0.0203 \text{ ft}^3}{\text{s}}\right)} = 65.27 \text{ ft}$$

$$v = \frac{Q}{A} = \frac{0.0203 \text{ ft}^3/\text{s}}{\pi(0.0625 \text{ ft})^2/4} = 6.60 \text{ ft/s}: \quad \frac{v^2}{2g} = \frac{(6.60)^2}{2(32.2)} = 0.677 \text{ ft}$$

$$h_L = f\frac{L}{D}\frac{v^2}{2g} = (0.0225)\frac{100}{0.0625}(0.677 \text{ ft}) = 24.36 \text{ ft}$$

$$N_R = \frac{vD}{\nu} = \frac{(6.60)(0.0625)}{1.21 \times 10^{-5}} = 3.41 \times 10^4 \rightarrow f = 0.0225 \text{ (Smooth curve)}$$

$z_2 - z_1 = 65.27 \text{ ft} - 24.36 \text{ ft} - 0.677 \text{ ft} =$ **40.2 ft**

APPLIED FLUID MECHANICS		III-A & III-B US: CLASS III SERIES SYSTEMS	
Objective: Minimum pipe diameter		***Method III-A:*** *Uses Equation 11-8 to compute the minimum size of pipe of a given length that will flow a given volume flow rate of fluid with a limited pressure drop. (No minor losses)*	
Problem 11.43 and 11.44			
Figure 11.30 Water at 60F			
System Data: **SI Metric Units**		***Fluid Properties: Water at 60F***	
Pressure at point 1 =	*80* psig	*Specific weight =*	*62.40* lb/ft^3
Pressure at point 2 =	*60* psig	*Kinematic Viscosity =*	*1.21E-05* ft^2/s
Elevation at point 1 =	*0* ft	**Intermediate Results in Eq. 11-8:**	
Elevation at point 2 =	*25* ft	L/gh_L =	0.880858
Allowable Energy Loss: h_L =	21.15 ft	Argument in bracket:	2.18E-08
Volume flow rate: Q =	*0.5* ft^3/s	**Final Minimum Diameter:**	
Length of pipe: L =	*600* ft	Minimum diameter: D =	0.3259 ft
Pipe wall roughness: ε =	*1.50E-04* ft		

CLASS III SERIES SYSTEMS			*Specified pipe diameter: D =*	*0.3355* ft-min std size	
Method III-B: *Use results of Method III-A; Specify actual diameter; Include minor losses; then pressure at Point 2 is computed.*			4-in Sch 40 steel pipe		
Additional Pipe Data:			***If velocity is in the pipe, enter "=B23" for value***		
Flow area: A =	0.08840 ft^2		*Velocity at point 1 =*	*5.66* ft/s	
Relative roughness: D/ε =	2237		*Velocity at point 2 =*	*5.66* ft/s	
L/D =	1788		Vel. head at point 1 =	0.497 ft	
Flow Velocity =	5.66 ft/s		Vel. head at point 2 =	0.497 ft	
Velocity head =	0.497 ft		***Results:***		
Reynolds No. =	1.57E+05		*Given pressure at point 1 =*	80 psig	
Friction factor: f =	0.0191		*Desired pressure at point 2 =*	60 psig	
			Actual pressure at point 2 =	***60.80 psig***	
			(Compare actual with desired pressure at point 2)		
Energy losses in Pipe:	*K*	Qty.			
Pipe Friction: $K_1 = f(L/D)$ =	34.19	1	Energy loss h_{L1} =	16.98 ft	
Gate valve: K_2 =	*0.136*	*1*	Energy loss h_{L2} =	0.07 ft	$f_T = 0.017$
Butterfly valve: K_3 =	*0.765*	*1*	Energy loss h_{L3} =	0.38 ft	$f_T = 0.017$
Std. 90 deg elbows: K_4 =	*0.510*	*3*	Energy loss h_{L4} =	0.76 ft	$f_T = 0.017$
Std. 45 deg elbows: K_5 =	*0.272*	*2*	Energy loss h_{L5} =	0.27 ft	$f_T = 0.017$
Swing type chk valve: K_6 =	*1.700*	*1*	Energy loss h_{L6} =	0.84 ft	$f_T = 0.017$
Element 7: K_7 =	*0.00*	*1*	Energy loss h_{L7} =	0.00 ft	
Element 8: K_8 =	*0.00*	*1*	Energy loss h_{L8} =	0.00 ft	
			Total energy loss h_{Ltot} =	19.30 ft	

NOTES:
Problem 11.43 answer is the result of the top portion for Method III-A solution.
Dmin = 0.3259 ft. Standard 4-in Schedule 40 steel pipe is closest standard size; D = 0.3355 ft.

Problem 11.44 answer is the result of the bottom portion for Method III-B solution.
Pipe size is set to 0.3355 ft for the 4-in Schedule 40 steel pipe. With minor losses considered, the pressure at point 2 is 60.80 psig, greater than the desired 60.0 psig. Therefore, it is satisfactory.

APPLIED FLUID MECHANICS		III-A & III-B US: CLASS III SERIES SYSTEMS	
Objective: Minimum pipe diameter		***Method III-A:*** *Uses Equation 11-8 to compute the minimum size of pipe of a given length that will flow a given volume flow rate of fluid with a limited pressure drop. (No minor losses)*	
Problem 11.45 Class III-A andIII-B			
Water at 60F			
System Data: **SI Metric Units**		***Fluid Properties: Water at 60F***	
Pressure at point 1 =	*15* psig	*Specific weight =*	*62.40* lb/ft^3
Pressure at point 2 =	*0* psig	*Kinematic Viscosity =*	*1.21E-05* ft^2/s
Elevation at point 1 =	*150.4* ft	**Intermediate Results in Eq. 11-8:**	
Elevation at point 2 =	*172.8* ft	L/gh_L =	0.140592
Allowable Energy Loss: h_L =	12.22 ft	Argument in bracket:	6.06E-20
Volume flow rate: Q =	*0.08909* ft^3/s	**Final Minimum Diameter:**	
Length of pipe: L =	*55.3* ft	Minimum diameter: D =	0.1124 ft
Pipe wall roughness: ε =	*1.00E-06* ft		

CLASS III SERIES SYSTEMS			*Specified pipe diameter: D =*	*0.1342* ft-min std sz
Method III-B: *Use results of Method III-A; Specify actual diameter; Include minor losses; then pressure at Point 2 is computed.*			1 1/2 inch Sch 40 steel pipe	
Additional Pipe Data:			***If velocity is in the pipe, enter "=B23" for value***	
			Velocity at point 1 =	*6.30* ft/s
			Velocity at point 2 =	*6.30* ft/s
Flow area: A =	0.01414 ft^2		Vel. head at point 1 =	0.616 ft
Relative roughness: D/ε =	134200		Vel. head at point 2 =	0.616 ft
L/D =	412		***Results:***	
Flow Velocity =	6.30 ft/s		*Given pressure at point 1 =*	15 psig
Velocity head =	0.616 ft		*Desired pressure at point 2 =*	0 psig
Reynolds No. =	6.99E+04		***Actual pressure at point 2 =***	***2.13 psig***
Friction factor: f =	0.0193		***(Compare actual with desired pressure at point 2)***	
Energy losses in Pipe:	*K*	Qty.		
Pipe Friction: $K_1 = f(L/D)$ =	7.96	1	Energy loss h_{L1} =	4.90 ft
Ball check valve: K_2 =	*1.50*	*1*	Energy loss h_{L2} =	0.92 ft (f_T = 0.01est)
8 std. elbows: K_3 =	*0.30*	*8*	Energy loss h_{L3} =	1.48 ft (f_T = 0.01est)
Element: K_4 =	*0.00*	*1*	Energy loss h_{L4} =	0.00 ft
Element: K_5 =	*0.00*	*1*	Energy loss h_{L5} =	0.27 ft
Element: K_6 =	*0.00*	*1*	Energy loss h_{L6} =	0.84 ft
Element 7: K_7 =	*0.00*	*1*	Energy loss h_{L7} =	0.00 ft
Element 8: K_8 =	*0.00*	*1*	Energy loss h_{L8} =	0.00 ft
			Total energy loss h_{Ltot} =	7.31 ft

APPLIED FLUID MECHANICS	*I Power US:* CLASS I SERIES SYSTEMS
Objective: ***Pump power***	*Reference points for the energy equation:*
Problem 11.46	Pt. 1: Fluid surface in sump – See Figure 10.25 (Reference)
	Pt. 2: In free stream of fluid outside end of discharge pipe

System Data: **U.S. Customary Units**

Volume flow rate: Q =	*0.08909 ft³/s*	*Elevation at point 1 =*	*150.4 ft*
Pressure at point 1 =	*0 psig*	*Elevation at point 2 =*	*172.8 ft*
Pressure at point 2 =	*0 psig*	*If Ref. pt. is in pipe: Set v_1 "= B20" OR Set v_2 "= E20"*	
Velocity at point 1 =	*0.00 ft/s -->*	Vel head at point 1 =	0.00 *ft*
Velocity at point 2 =	*6.30 ft/s -->*	Vel head at point 2 =	0.62 *ft*

Fluid Properties: Water at 60F — May need to compute: $\nu = \eta/\rho$

Specific weight =	*62.40 lb/ft³*	*Kinematic viscosity =*	*1.21E-05ft²/s*

Pipe 1: 1 1/2-in Sch 40 plastic pipe		***Pipe 2:***	***NONE***	
Diameter: D =	*0.1342 ft*	*Diameter: D =*	*1 ft*	
Wall roughness: ε =	*1.00E-06 ft*	*Wall roughness: ε =*	*1.50E-04 ft*	*[See Table 8.2]*
Length: L =	*55.3 ft*	*Length: L =*	*0 ft*	
Area: *A* =	0.01414 ft²	Area: *A* =	0.78540 ft²	[$A = \pi D^2/4$]
D/ε =	134200	*D/ε* =	6667	Relative roughness
L/D =	412	*L/D* =	0	
Flow Velocity =	6.30 ft/s	Flow Velocity =	0.11 ft/s	[$v = Q/A$]
Velocity head =	0.616 ft	Velocity head =	0.000 ft	[$v^2/2g$]
Reynolds No. =	6.99E+04	Reynolds No. =	9.37E+03	[$N_R = vD/\nu$]
Friction factor: *f* =	0.0193	Friction factor: *f* =	0.0318	Using Eq. 8-7

Energy losses-Pipe 1:	*K*	Qty.			
Pipe: K_1 =	7.96	1	Energy loss h_{L1} =	4.90 ft	
Ball check value: K_2 =	*1.50*	*1*	Energy loss h_{L2} =	0.92 ft	[f_T = 0.010 assumed]
Std. elbows: K_3 =	*0.30*	*8*	Energy loss h_{L3} =	1.48 ft	[f_T = 0.010 assumed]
Element 4: K_4 =	*0.00*	*1*	Energy loss h_{L4} =	0.00 ft	
Element 5: K_5 =	*0.00*	*1*	Energy loss h_{L5} =	0.00 ft	
Element 6: K_6 =	*0.00*	*1*	Energy loss h_{L6} =	0.00 ft	
Element 7: K_7 =	*0.00*	*1*	Energy loss h_{L7} =	0.00 ft	
Element 8: K_8 =	*0.00*	*1*	Energy loss h_{L8} =	0.00 ft	

Energy losses-Pipe 2:	*K*	Qty.		
Pipe: K_1 =	8.16	1	Energy loss h_{L1} =	0.00 ft
Elbow: K_2 =	*0.54*	*1*	Energy loss h_{L2} =	0.00 ft
Nozzle: K_3 =	*32.60*	*1*	Energy loss h_{L3} =	0.00 ft
Element 4: K_4 =	*0.00*	*1*	Energy loss h_{L4} =	0.00 ft
Element 5: K_5 =	*0.00*	*1*	Energy loss h_{L5} =	0.00 ft
Element 6: K_6 =	*0.00*	*1*	Energy loss h_{L6} =	0.00 ft
Element 7: K_7 =	*0.00*	*1*	Energy loss h_{L7} =	0.00 ft
Element 8: K_8 =	*0.00*	*1*	Energy loss h_{L8} =	0.00 ft

	Total energy loss h_{Ltot} =	7.31 ft
Results:	Total head on pump: h_A =	30.3 ft
	Power added to fluid: P_A =	0.31 hp
	Pump efficiency =	*76.00 %*
	Power input to pump: P_I =	0.403 hp

APPLIED FLUID MECHANICS		III-A & III-B SI: CLASS III SERIES SYSTEMS	
Objective: Minimum pipe diameter		*Method III-A: Uses Equation 11-13 to compute the minimum size of pipe of a given length that will flow a given volume flow rate of fluid with a limited pressure drop. (No minor losses)*	
Problem 11.47			
Figure 11.31 Propyl alcohol at 25C			
***System Data:* SI Metric Units**		***Fluid Properties:***	
Pressure at point 1 =	*0* kPa	*Specific weight =*	*7.87* kN/m^3
Pressure at point 2 =	*0* kPa	*Kinematic Viscosity =*	*2.39E-06* m^2/s
Elevation at point 1 =	*17.4* m	**Intermediate Results in Eq. 11-13:**	
Elevation at point 2 =	*2.4* m	L/gh_L =	0.047571
Allowable Energy Loss: h_L =	15.00 m	Argument in bracket:	1.15E-37
Volume flow rate: Q =	*0.0025* m^3/s	**Final Minimum Diameter:**	
Length of pipe: L =	*7* m	Minimum diameter: D =	0.0220 m
Pipe wall roughness: ε =	*1.50E-06* m		

CLASS III SERIES SYSTEMS			*Specified pipe diameter: D =*	*0.02753* m
***Method III-B:** Use results of Method III-A; Specify actual diameter; Include minor losses; then pressure at Point 2 is computed.*			Std. 1 1/4-inch steel tube; t = 0.083 (Appendix G	
			If velocity is in the pipe, enter "=B23" for value	
Additional Pipe Data:			Velocity at point 1 =	*0.00* m/s
			Velocity at point 2 =	*0.00* m/s
Flow area: A =	0.000595 m^2		Vel. head at point 1 =	0.000 m
Relative roughness: D/ε =	18353		Vel. head at point 2 =	0.000 m
L/D =	254		***Results:***	
Flow Velocity =	4.20 m/s		*Given pressure at point 1 =*	0 kPa
Velocity head =	0.899 m		*Desired pressure at point 2 =*	0 kPa
Reynolds No. =	4.84E+04		***Actual pressure at point 2 =***	***5.74 kPa***
Friction factor: f =	0.0211		***(Actual p_2 should be > desired pressure)***	
Energy losses in Pipe:	*K*	Qty.		
Pipe Friction: $K_1 = f(L/D)$ =	5.37	1	Energy loss h_{L1} =	4.83 m
Filter: K_2 =	*8.50*	*1*	Energy loss h_{L2} =	7.64 m
Entrance: K_3 =	*1.00*	*1*	Energy loss h_{L3} =	0.90 m
Exit: K_4 =	*1.00*	*1*	Energy loss h_{L4} =	0.90 m
Element 5: K_5 =	*0.00*	*1*	Energy loss h_{L5} =	0.00 m
Element 6: K_6 =	*0.00*	*1*	Energy loss h_{L6} =	0.00 m
Element 7: K_7 =	*0.00*	*1*	Energy loss h_{L7} =	0.00 m
Element 8: K_8 =	*0.00*	*1*	Energy loss h_{L8} =	0.00 m
			Total energy loss h_{Ltot} =	14.27 m

Actual flow rate will be greater than design value – See next page

Design Volume flow rate: Q = .0025 m^3/s

Design Volume flow rate: Q = 150 L/min

APPLIED FLUID MECHANICS	*II-A & II-B SI:* CLASS II SERIES SYSTEMS
Objective: Volume flow rate	**Method II-A: No minor losses**
Problem 11.47A-Added part	Uses Equation 11-3 to estimate the allowable volume flow rate
Figure 11.31 Propyl alcohol at 25C	to maintain desired pressure at point 2 for a given pressure at point 1

System Data: **SI Metric Units**

Pressure at point 1 =	*0*	kPa	*Elevation at point 1 =*	*17.4*	m
Pressure at point 2 =	*0*	kPa	*Elevation at point 2 =*	*2.4*	m

Energy loss: h_L = 15.00 m

Fluid Properties: May need to compute: $\nu = \eta/\rho$

Specific weight = *7.87 kN/m³* *Kinematic viscosity =* *2.39E-06 m²/s*

Pipe data: 1 1/4-in steel tube; t = 0.083			
Diameter: D =	*0.02753 m*		
Wall roughness: ε =	*1.50E-06 m*		
Length: L =	*7 m*	***Results: Maximum values***	
Area: *A* =	0.0005953 m²	Volume flow rate: *Q* =	0.0047 m³/s Using Eq. 11-3
D/ε =	18353.333	Velocity: *v* =	7.87 m/s

CLASS II SERIES SYSTEMS	*Volume flow rate: Q =*	*0.002566 m³/s*
Method II-B: *Use results of Method IIA;*	Given: Pressure p_1 =	0 kPa
Include minor losses;	**Pressure p_2 =**	**0.00 kPa**
then pressure at Point 2 is computed	***NOTE: Should be >***	**0 kPa**

Additional Pipe Data:		***Adjust estimate for Q until p_2 is greater than desired pressure.***	
L/D =	254		
Flow Velocity =	4.31 m/s	Velocity at point 1 =	0.00 m/s |--> If velocity is in pipe:
Velocity head =	0.947 m	Velocity at point 2 =	0.00 m/s |--> Enter "=B24"
Reynolds No. =	4.96E+04	Vel. head at point 1 =	0.000 m
Friction factor: *f* =	0.0210	Vel. head at point 2 =	0.000 m

Energy losses in Pipe:	*K*	Qty.		
Pipe: $K_1 = f(L/D)$ =	5.34	1	Energy loss h_{L1} =	5.06 m Friction
Filter: K_2 =	*8.500*	*1*	Energy loss h_{L2} =	8.05 m
Entrance: K_3 =	*0.68*	*1*	Energy loss h_{L3} =	0.95 m
Exit 4: K_4 =	*1.00*	*1*	Energy loss h_{L4} =	0.95 m
Element 5: K_5 =	*1.00*	*1*	Energy loss h_{L5} =	0.00 m
Element 6: K_6 =	*0.00*	*1*	Energy loss h_{L6} =	0.00 m
Element 7: K_7 =	*0.00*	*1*	Energy loss h_{L7} =	0.00 m
Element 8: K_8 =	*0.00*	*1*	Energy loss h_{L8} =	0.00 m
			Total energy loss h_{Ltot} =	15.00 m

Actual volume flow rate when p_2 = 0.00 kPa

Actual volume flow rate: *Q* = 0.002566 m³/s

Actual volume flow rate: *Q* = 153.93 L/min

APPLIED FLUID MECHANICS	II-A & II-B SI: CLASS II SERIES SYSTEMS
Objective: Volume flow rate	**Method II-A: No minor losses**
Problem 11.48	Uses Equation 11-3 to estimate the allowable volume flow rate
Figure 11.31 Propyl alcohol at 25C	to maintain desired pressure at point 2 for a given pressure at point 1

System Data: **SI Metric Units**

Pressure at point 1 =	*0* kPa	*Elevation at point 1 =*	*12.8* m
Pressure at point 2 =	*0* kPa	*Elevation at point 2 =*	*2.4* m

Energy loss: h_L = 10.40 m

Fluid Properties: May need to compute: $\nu = \eta/\rho$

Specific weight = *7.87 kN/m³*	*Kinematic viscosity =* *2.39E-06 m²/s*

Pipe data: 1 1/4-in steel tube; t = 0.083

Diameter: D =	*0.02753 m*
Wall roughness: ε =	*1.50E-06 m*
Length: L =	*7 m*
Area: *A* =	0.0005953 m²
D/ε =	18353.333

Results: Maximum values

Volume flow rate: *Q* =	0.0038 m³/s	Using Eq. 11-3
Velocity: *v* =	6.42 m/s	

CLASS II SERIES SYSTEMS	*Volume flow rate: Q = 0.002121 m³/s*
Method II-B: *Use results of Method IIA; Include minor losses; then pressure at Point 2 is computed*	Given: Pressure p_1 = 0 kPa **Pressure p_2 = 0.00 kPa** ***NOTE: Should be > 0 kPa***

Additional Pipe Data:

L/D =	254
Flow Velocity =	3.56 m/s
Velocity head =	0.647 m
Reynolds No. =	4.10E+04
Friction factor: *f* =	0.0219

Adjust estimate for Q until p_2 is greater than desired pressure.

Velocity at point 1 =	0.00 m/s	|--> If velocity is in pipe:
Velocity at point 2 =	0.00 m/s	|--> Enter "=B24"
Vel. head at point 1 =	0.000 m	
Vel. head at point 2 =	0.000 m	

Energy losses in Pipe:	*K*	Qty.			
Pipe: $K_1 = f(L/D)$ =	5.57	1	Energy loss h_{L1} =	3.61 m	Friction
Filter: K_2 =	*8.500*	*1*	Energy loss h_{L2} =	5.50 m	
Entrance: K_3 =	*1.00*	*1*	Energy loss h_{L3} =	0.65 m	
Exit 4: K_4 =	*1.00*	*1*	Energy loss h_{L4} =	0.65 m	
Element 5: K_5 =	*0.00*	*1*	Energy loss h_{L5} =	0.00 m	
Element 6: K_6 =	*0.00*	*1*	Energy loss h_{L6} =	0.00 m	
Element 7: K_7 =	*0.00*	*1*	Energy loss h_{L7} =	0.00 m	
Element 8: K_8 =	*0.00*	*1*	Energy loss h_{L8} =	0.00 m	
			Total energy loss h_{Ltot} =	10.40 m	

Actual volume flow rate when p_2 = 0.00 kPa

Actual volume flow rate:	*Q* = 0.002121 m³/s
Actual volume flow rate:	*Q* = 127.26 L/min
Change from Problem 11.47A:	−26.67 L/min
Percent change:	−17.3 %

APPLIED FLUID MECHANICS	*II-A & II-B SI:* CLASS II SERIES SYSTEMS
Objective: Volume flow rate	**Method II-A: No minor losses**
Problem 11.49	Uses Equation 11-3 to estimate the allowable volume flow rate
Figure 11.31 Propyl alcohol at 25C	to maintain desired pressure at point 2 for a given pressure at point 1

System Data: **SI Metric Units**

Pressure at point 1 =	*0*	kPa	*Elevation at point 1 =*	*17.4*	m
Pressure at point 2 =	*0*	kPa	*Elevation at point 2 =*	*2.4*	m

Energy loss: h_L = 10.87 m

Fluid Properties: May need to compute: $\nu = \eta/\rho$

Specific weight = *7.87* kN/m^3 *Kinematic viscosity =* *2.39E-06* m^2/s

Pipe data: 1 1/4-in steel tube; t = 0.083

Diameter: D =	*0.02753*	*m*
Wall roughness: ε =	*1.50E-06*	*m*
Length: L =	*7*	*m*
Area: *A* =	0.0005953	m^2
D/ε =	18353.333	

Results: Maximum values

Volume flow rate: *Q* =	0.0039	m^3/s	Using Eq. 11-3
Velocity: *v* =	6.58	m/s	

CLASS II SERIES SYSTEMS

Method II-B: *Use results of Method IIA;*
Include minor losses;
then pressure at Point 2 is computed

Volume flow rate: Q = 0.002170 m^3/s *= 130.2 L/min*

Given: Pressure p_1 =	-32.5	kPa
Pressure p_2 =	**0.00**	**kPa**
NOTE: Should be >	**0**	**kPa**

Adjust estimate for Q until p_2 is greater than desired pressure.

Velocity at point 1 =	0.00	m/s |--> If velocity is in pipe:
Velocity at point 2 =	0.00	m/s |--> Enter "=B24"
Vel. head at point 1 =	0.000	m
Vel. head at point 2 =	0.000	m

Additional Pipe Data:

L/D =	254	
Flow Velocity =	3.65	m/s
Velocity head =	0.678	m
Reynolds No. =	4.20E+04	
Friction factor: *f* =	0.0218	

Energy losses in Pipe:	*K*	Qty.			
Pipe: $K_1 = f(L/D)$ =	5.54	1	Energy loss h_{L1} =	3.76 m	Friction
Filter: K_2 =	*8.500*	*1*	Energy loss h_{L2} =	5.76 m	
Entrance: K_3 =	*1.00*	*1*	Energy loss h_{L3} =	0.68 m	
Exit 4: K_4 =	*1.00*	*1*	Energy loss h_{L4} =	0.68 m	
Element 5: K_5 =	*0.00*	*1*	Energy loss h_{L5} =	0.00 m	
Element 6: K_6 =	*0.00*	*1*	Energy loss h_{L6} =	0.00 m	
Element 7: K_7 =	*0.00*	*1*	Energy loss h_{L7} =	0.00 m	
Element 8: K_8 =	*0.00*	*1*	Energy loss h_{L8} =	0.00 m	
			Total energy loss h_{Ltot} =	10.87 m	

Actual volume flow rate when p_2 = 0.00 kPa

Actual volume flow rate: *Q* =	0.002170	m^3/s
Actual volume flow rate: *Q* =	130.218	L/min
Change from Problem 11.47A:	–23.712	L/min
Percent change:	–15.4	%

APPLIED FLUID MECHANICS	*II-A & II-B SI:* CLASS II SERIES SYSTEMS
Objective: Volume flow rate	**Method II-A: No minor losses**
Problem 11.50	Uses Equation 11-3 to estimate the allowable volume flow rate
Figure 11.31 Propyl alcohol at 25C	to maintain desired pressure at point 2 for a given pressure at point 1

System Data:	**SI Metric Units**			
Pressure at point 1 =	0 kPa		*Elevation at point 1 =*	17.4 m
Pressure at point 2 =	0 kPa		*Elevation at point 2 =*	2.4 m
Energy loss: h_L =	15.00 m			
Fluid Properties:			May need to compute: $\nu = \eta/\rho$	
Specific weight =	*7.87 kN/m³*		*Kinematic viscosity =*	*2.39E-06 m²/s*
Pipe data: 1 1/4-in steel tube; t = 0.083				
Diameter: D =	*0.02753 m*			
Wall roughness: ε =	*1.50E-06 m*			
Length: L =	*7 m*		***Results: Maximum values***	
Area: *A* =	0.0005953 m²		Volume flow rate: *Q* =	0.0047 m³/s Using Eq. 11-3
D/ε =	18353.333		Velocity: *v* =	7.87 m/s

CLASS II SERIES SYSTEMS			*Volume flow rate: Q =*	*0.002430 m³/s*
Method II-B: *Use results of Method IIA;*			Given: Pressure p_1 =	0 kPa
Include minor losses;			**Pressure p_2 =**	**0.00 kPa**
then pressure at Point 2 is computed			***NOTE: Should be >***	**0 kPa**
Additional Pipe Data:			***Adjust estimate for Q until p_2***	
			is greater than desired pressure.	
L/D =	254			
Flow Velocity =	4.08 m/s		Velocity at point 1 =	0.00 m/s |--> If velocity is in pipe:
Velocity head =	0.849 m		Velocity at point 2 =	0.00 m/s |--> Enter "=B24"
Reynolds No. =	4.70E+04		Vel. head at point 1 =	0.000 m
Friction factor: *f* =	0.0213		Vel. head at point 2 =	0.000 m
Energy losses in Pipe:	*K*	Qty.		
Pipe: $K_1 = f(L/D)$ =	5.41	1	Energy loss h_{L1} =	4.59 m Friction
Filter: K_2 =	*8.500*	*1*	Energy loss h_{L2} =	7.22 m
Entrance: K_3 =	*1.00*	*1*	Energy loss h_{L3} =	0.85 m
Exit 4: K_4 =	*1.00*	*1*	Energy loss h_{L4} =	0.85 m
1/2 op gate valve: K_5 =	*1.76*	*1*	Energy loss h_{L5} =	1.49 m f_T = 0.011
Element 6: K_6 =	*0.00*	*1*	Energy loss h_{L6} =	0.00 m
Element 7: K_7 =	*0.00*	*1*	Energy loss h_{L7} =	0.00 m
Element 8: K_8 =	*0.00*	*1*	Energy loss h_{L8} =	0.00 m
			Total energy loss h_{Ltot} =	15.00 m

Actual volume flow rate when p_2 = 0.00 kPa
Actual volume flow rate: *Q* = 0.002430 m³/s
Actual volume flow rate: *Q* = 145.77 L/min
Change from Problem 11.47A: -8.16 L/min
Percent change: -5.3 %

CHAPTER TWELVE

PARALLEL PIPE LINE SYSTEMS

Systems with two branches

12.1 $\frac{p_A}{\gamma} + z_A + \frac{\upsilon_A^2}{2g} - h_L = \frac{p_B}{\gamma} + z_B + \frac{\upsilon_B^2}{2g}$: $z_A = z_B$, $\upsilon_A = \upsilon_B$

$$\frac{p_A - p_B}{\gamma} = h_L = h_{L_a} = h_{L_b} = \frac{(700-550)\ \text{kN/m}^2}{8.80\ \text{kN/m}^3} = 17.05\ \text{m}$$

Upper branch a: $h_{L_a} = f_a \frac{60}{0.1023}\frac{\upsilon_a^2}{2g} + 2f_{aT}(30)\frac{\upsilon_a^2}{2g} = [587f_a + 1.02]\frac{\upsilon_a^2}{2g}$

$f_{aT} = 0.017$ Friction Elbows

Lower branch b: $h_{L_b} = f_b \frac{60}{0.0779}\frac{\upsilon_b^2}{2g} + f_{bT}(240)\frac{\upsilon_b^2}{2g} + 2f_{bT}(30)\frac{\upsilon_b^2}{2g} = [770f_b + 5.4]\frac{\upsilon_b^2}{2g}$

$f_{bT} = 0.018$ Friction Valve Elbows

Assume $f_a = f_b = 0.02$:

$$h_{L_a} = 17.05\ \text{m} = [587f_a + 1.02]\frac{\upsilon_a^2}{2g}; \upsilon_a = \sqrt{\frac{2(9.81)(17.05)}{[587f_a + 1.02]}} = \mathbf{5.08\ m/s}$$

$$N_{R_a} = \frac{\upsilon_a D_a}{\nu} = \frac{(5.08)(0.1023)}{4.8\times10^{-6}} = 1.08\times10^5 : \frac{D}{\varepsilon} = \frac{0.1023}{4.6\times10^{-5}} = 2224 \rightarrow f_a = 0.02$$

No change

$$h_{L_b} = 17.05\ \text{m} = [770f_b + 5.4]\frac{\upsilon_b^2}{2g}; \upsilon_b = \sqrt{\frac{2(9.81)(17.05)}{[770f_b + 5.4]}} = 4.01\ \text{m/s}$$

$$N_{R_b} = \frac{\upsilon_b D_b}{\nu} = \frac{(4.01)(0.0779)}{4.8\times10^{-6}} = 6.51\times10^4 : \frac{D}{\varepsilon} = \frac{0.0779}{4.6\times10^{-5}} = 1693 \rightarrow f_b = 0.022$$

Recompute υ_b:

$\upsilon_b = \sqrt{\frac{2(9.81)(17.05)}{[770f_b + 5.4]}} =$ **3.87 m/s**; $N_{R_b} = 6.28\times10^4 \rightarrow f_b = 0.022$ **No change**

Then $Q_a = A_a\upsilon_a = (8.213\times10^{-3}\ \text{m}^2)(5.08\ \text{m/s}) = 4.17\times10^{-2}\ \text{m}^3/\text{s}$

$Q_b = A_b\upsilon_b = (4.768\times10^{-3}\ \text{m}^2)(3.87\ \text{m/s}) = 1.85\times10^{-2}\ )\text{m}^3/\text{s}$

$Q_T = 6.02\times10^{-2}\ \text{m}^3/\text{s}$

12.2 Data from example Problem 12.1 $Q_1 = 0.223\ \text{ft}^3/\text{s} = A_a\upsilon_a + A_b\upsilon_b$;

$f_{aT} = 0.019;\ f_{bT} = 0.022$

$$h_{L_a} = f_{aT}(160)\frac{\upsilon_a^2}{2g} + f_{aT}(8)\frac{\upsilon_a^2}{2g} + 7.5\frac{\upsilon_a^2}{2g} = (168f_{aT} + 7.5)\frac{\upsilon_a^2}{2g} = 10.69\left(\frac{\upsilon_a^2}{2g}\right)$$

Valve 1 Valve 2 Heat exch.

$$h_{L_b} = 2f_{bT}(30)\frac{\upsilon_b^2}{2g} + f_{bT}(340)\frac{\upsilon_b^2}{2g} + f_b\frac{20}{0.115}\frac{\upsilon_b^2}{2g} = [174f_b + 400f_{bT}]\frac{\upsilon_b^2}{2g}[174f_b + 8.80]\frac{\upsilon_b^2}{2g}$$

2 Elbows Valve Friction

$(D/\varepsilon)_b = 768$; Try $f_b = 0.023$

$$h_{L_b} = [174(0.023) + 8.80]\frac{\upsilon_b^2}{2g} = 12.80\frac{\upsilon_b^2}{2g}$$

Let $h_{L_a} = h_{L_b}$: $10.69\frac{\upsilon_a^2}{2g} = 12.8\frac{\upsilon_b^2}{2g}$: $\upsilon_a = 1.094\upsilon_b$

$Q_1 = A_a\upsilon_a + A_b\upsilon_b = A_a(1.094\upsilon_b) + A_b\upsilon_b = \upsilon_b[1.094A_a + A_b]$

$$\upsilon_b = \frac{Q_1}{1.094A_a + A_b} = \frac{0.223}{1.094(0.0233) + 0.01039} = 6.21\ \text{ft/s};\ \upsilon_a = 1.094\upsilon_b = 6.79\ \text{ft/s}$$

$$N_{R_b} = \frac{\upsilon_b D_b}{\nu} = \frac{6.21(0.115)}{1.21\times 10^{-5}} = 5.90\times 10^4;\ f_b = 0.025$$

Repeat: $h_{L_b} = 13.15\frac{\upsilon_b^2}{2g}$; $\upsilon_a = 1.109\upsilon_b$; $\upsilon_b = 6.15$ ft/s; $\upsilon_a = 6.83$ ft/s

$N_{R_b} = 5.85 \times 10^4$; $f_b = 0.025$ **No change**

$Q_a = A_a\upsilon_a = (0.0233)(6.83) = 0.159\ \text{ft}^3/\text{s}$; $Q_b = A_b\upsilon_b = 0.01039(6.15) =$ **0.0639 ft³/s**

$$h_L = h_{L_a} = 10.69\frac{\upsilon_a^2}{2g} = \frac{(10.69)(6.83)^2}{2(32.2)} = 7.74\ \text{ft}$$

$$p_1 - p_2 = \gamma h_L\left(\frac{62.4\ \text{lb}}{\text{ft}^3}\right)(7.74\ \text{ft})\left(\frac{1\ \text{ft}^2}{144\ \text{in}^2}\right) = \mathbf{3.36\ psi}$$

12.3 $h_{L_a} = f_a\frac{30}{0.0525}\frac{\upsilon_a^2}{2g} = (571f_a)\frac{\upsilon_a^2}{2g}$ and $h_{L_a} = h_{L_b}$: $f_{bT} = 0.019$

Friction

$$h_{L_b} = f_b\frac{60}{0.0525}\frac{\upsilon_b^2}{2g} + 3f_{bT}(30)\frac{\upsilon_b^2}{2g} + f_{bT}(150)\frac{\upsilon_b^2}{2g} = [1142f_b + 4.56]\frac{\upsilon_b^2}{2g}$$

① Assume $f_a = f_b = 0.02$ and set $h_{L_a} = h_{L_b}$

$$571(0.02)\frac{\upsilon_a^2}{2g} = [1142(0.02) + 4.56]\frac{\upsilon_b^2}{2g}$$

$$11.42\upsilon_a^2 = 27.4\upsilon_b^2$$

$$\upsilon_a = \sqrt{27.4/11.42}\ \upsilon_b = 1.55\upsilon_b$$

$Q_A = A_a\upsilon_a + A_b\upsilon_b = A_a(1.55\upsilon_b) + A_b\upsilon_b = \upsilon_b[2.55A_b]$

$$\upsilon_b = \frac{Q_A}{2.55A_b} = \frac{850\text{ L/min}\; 1\text{ m}^3/\text{s}}{2.55(2.168\times10^{-3}\text{m}^2)(60000\text{ L/min})} = 2.56\text{ m/s}$$

$\upsilon_a = 1.55\upsilon_b = 3.97$ m/s

$$N_{R_a} = \frac{\upsilon_a D_a}{\nu} = \frac{(3.97)(0.0525)}{1.30\times10^{-6}} = 1.60\times10^5 : \frac{D}{\varepsilon} = \frac{0.0525}{4.6\times10^{-5}} = 1141 \rightarrow f_a = 0.021$$

$$N_{R_b} = \frac{\upsilon_b D_b}{\nu} = \frac{(2.56)(0.0525)}{1.30\times10^{-6}} = 1.03\times10^5 : \frac{D}{\varepsilon} = 1141 \rightarrow f_b = 0.0215$$

Recompute from ①:

$$571(0.021)\frac{\upsilon_a^2}{2g} = [1142(0.0215) + 4.56]\frac{\upsilon_b^2}{2g}$$

$$11.91\,\upsilon_a^2 = 29.11\,\upsilon_b^2$$

$$\upsilon_a = 1.56\upsilon_b$$

$$\upsilon_b = \frac{Q_A}{2.56A_b} = \frac{850/60000}{(2.56)(2.168\times10^{-3})} = 2.55\text{ m/s: } \upsilon_a = 1.56\upsilon_b = 3.98\text{ m/s}$$

No change in f_a or f_b

$Q_a = A_a\upsilon_a = (2.168\times10^{-3}\text{m}^2)(3.98\text{ m/s})[60000\text{ L/min}/1\text{ m}^3/\text{s}] = 518$ L/min

$Q_b = A_b\upsilon_b = (2.168\times10^{-3})(2.55)(60000) =$ **332 L/min**

$$p_a - p_b = \gamma h_L = \gamma h_{L_a} = \frac{9.81\text{ kN}}{\text{m}^3}\left[571(0.021)\frac{(3.98)^2}{2(9.81)}\text{m}\right] = \mathbf{95.0\ kPa}$$

12.4 $Q_{8\text{-in}} = 1350\text{ gal/min}\,\frac{1\text{ ft}^3/\text{s}}{449\text{ gal/min}} = 3.01\text{ ft}^3/\text{s}$: Benzene: $\rho = 0.87(1.94) = 1.69$ slugs/ft^3

$f_{6T} = 0.015;\ f_{2T} = 0.019$ $\qquad\eta = 8\times10^{-6}$ lb-s/ft^2

$$h_{L_6} = f_6\frac{500}{0.5054}\frac{\upsilon_6^2}{2g} + f_{6T}(340)\frac{\upsilon_6^2}{2g} + f_{6T}(100)\frac{\upsilon_6^2}{2g} + 2f_{6T}(30)\frac{\upsilon_6^2}{2g} = [989f_6 + 7.5]\frac{\upsilon_b^2}{2g}$$

$$h_{L_2} = f_2\frac{500}{0.1723}\frac{\upsilon_2^2}{2g} + 2f_{2T}(30)\frac{\upsilon_2^2}{2g} + [2902f_2 + 1.14]\frac{\upsilon_2^2}{2g}$$

But $h_{L_6} = h_{L_2}$: $[989f_6 + 7.5]\frac{\upsilon_6^2}{2g} = [2902f_2 + 1.14]\frac{\upsilon_2^2}{2g}$

$$\upsilon_6 = \upsilon_2\sqrt{\frac{2902f_2 + 1.14}{989f_6 + 7.5}}$$

$$\left(\frac{D}{\varepsilon}\right)_6 = \frac{0.5054}{1.5\times10^{-4}} = 3369\text{: Try } f_6 = 0.016\text{: } \left(\frac{D}{\varepsilon}\right)_2 = \frac{0.1723}{1.5\times10^{-4}} = 1149;$$

Try $f_2 = 0.02$

$$\upsilon_6 = \upsilon_2\sqrt{\frac{2902(0.02) + 1.14}{989(0.016) + 7.5}} = 1.59\upsilon_2$$

$Q_8 = Q_6 + Q_2 = A_6\upsilon_b + A_2\upsilon_2 = A_6(1.59\upsilon_2) + A_2\upsilon_2 = \upsilon_2[1.59A_6 + A_2] = 3.01$ ft^3/s

$$\upsilon_2 = \frac{3.01\ \text{ft}^3/\text{s}}{1.59(0.2006) + (0.02333)\ \text{ft}^2} = 8.79\ \text{ft/s};\ \upsilon_6 = 1.59\upsilon_2 = 13.98\ \text{ft/s}$$

$$N_{R_6} = \frac{\upsilon_6 D_6 \rho}{\mu} = \frac{(13.98)(0.5054)(1.69)}{8\times 10^{-6}} = 1.49\times 10^6 \rightarrow f_6 = 0.016$$

$$N_{R_2} = \frac{\upsilon_2 D_2 \rho}{\mu} = \frac{(8.79)(0.1723)(1.69)}{8\times 10^{-6}} = 3.20\times 10^5 \rightarrow f_2 = 0.020$$

No change in f_6 or f_2

$Q_6 = A_6\upsilon_6 = (0.2006\ \text{ft}^2)(13.98\ \text{ft/s}) =$ **2.80 ft³/s** [1258 gal/min]

$Q_2 = A_2\upsilon_2 = (0.02333)(8.79) =$ **0.205 ft³/s** [92 gal/min]

12.5 For illustration, use water at 10°C; $Q_a = Q_b = 500$ L/min $= 8.33 \times 10^{-3}$ m³/s.

$$\upsilon_a = \frac{Q}{A_a} = \frac{8.33\times10^{-3}\ \text{m}^3/\text{s}}{\pi(0.100)^2\ \text{m}^2/4} = 1.061\ \text{m/s}:\ \left(\frac{D}{\varepsilon}\right)_a = \frac{0.100}{1.5\times10^{-6}} = 66667$$

$$N_{R_a}\ \frac{\upsilon_a D_a}{\nu} = \frac{(1.061)(0.100)}{1.30\times10^{-6}} = 8.18\times10^4 \rightarrow f_a = 0.0186;\quad f_{aT} = (0.010)\ \text{(approx.)}$$

$$\upsilon_b = \frac{Q}{A_b} = \frac{8.33\times10^{-3}\ \text{m}^3/\text{s}}{\pi(0.05)^2\ \text{m}^2/4} = 4.24\ \text{m/s}:\ \left(\frac{D}{\varepsilon}\right)_b = \frac{0.05}{1.5\times10^{-6}} = 33333$$

$$N_{R_b}\ \frac{\upsilon_b D_b}{\nu} = \frac{(4.24)(0.05)}{1.30\times10^{-6}} = 1.63\times10^5 \rightarrow f_b = 0.0163;\quad f_{bT} = 0.010\ \text{(approx.)}$$

$$h_{L_a} = f_a\frac{30\ \text{m}}{0.100\ \text{m}}\frac{\upsilon_a^2}{2g} + 2f_{aT}(30)\frac{\upsilon_a^2}{2g} + K\frac{\upsilon_a^2}{2g} = (300f_a + 0.60 + K)\frac{\upsilon_a^2}{2g}$$

Friction 2 Elbows Valve

$$h_{L_b} = f_b\frac{30}{0.05}\frac{\upsilon_b^2}{2g} + 2f_{bT}(30)\frac{\upsilon_b^2}{2g} = (600f_b + 0.60)\frac{\upsilon_b^2}{2g}$$

Friction 2 Elbows

$$h_{L_a} = [300(0.0186) + 0.60 + K]\frac{\upsilon_a^2}{2g} = (6.18 + K)\frac{\upsilon_a^2}{2g}$$

$$h_{L_b} = (600(0.0163) + 0.60)\frac{\upsilon_b^2}{2g} = 10.38\frac{\upsilon_b^2}{2g}$$

$$Q_a = Q_b = A_a\upsilon_a = A_b\upsilon_b;\ \upsilon_b = \upsilon_a\frac{A_a}{A_b} = \upsilon_a\left(\frac{D_a}{D_b}\right)^2 = 4\upsilon_a;\ \upsilon_b^2 = 16\upsilon_a^2$$

Equate $h_{L_a} = h_{L_b}$

$$(6.18 + K)\frac{\upsilon_a^2}{2g} = 10.38\frac{\upsilon_b^2}{2g} = 10.38\frac{16\upsilon_a^2}{2g} = \frac{166\upsilon_a^2}{2g};\ \text{then } 6.18 + K = 166$$

$K = 166 - 6.18 =$ **160**

12.6 $\frac{p_A}{\gamma} + z_A + \frac{\upsilon_A^2}{2g} - h_L = \frac{p_B}{\gamma} + z_B + \frac{\upsilon_B^2}{2g}$: $\upsilon_A = \upsilon_B, p_B = 0, z_A = z_B$

$$h_L = \frac{p_A}{\gamma} = \frac{20 \text{ lb ft}^3 \ 144 \text{ in}^2}{\text{in}^2 (62.4 \text{ lb})\text{ft}^2} = 46.2 \text{ ft} = h_1 = h_2$$

$$h_1 = 2(0.9)\frac{\upsilon_1^2}{2g} + 5\frac{\upsilon_1^2}{2g} = 6.8\frac{\upsilon_1^2}{2g}:\ h_2 = 2(0.9)\frac{\upsilon_2^2}{2g} + 10\frac{\upsilon_2^2}{2g} = 11.8\frac{\upsilon_2^2}{2g}$$

a. Both valves open:

$$\upsilon_1 = \sqrt{\frac{2gh_L}{6.8}} = \sqrt{\frac{2(32.2)(46.2)}{6.8}} = 20.9 \text{ ft/s};\ A_1 = \frac{\pi(2 \text{ in})^2}{4}\frac{\text{ft}^2}{144 \text{ in}^2} = 0.0218 \text{ ft}^2$$

$Q_1 = A_1\upsilon_1 = (0.0218 \text{ ft}^2)(20.9 \text{ ft/s}) = \mathbf{0.456 \text{ ft}^3/\text{s}}$

$$\upsilon_2 = \sqrt{\frac{2gh_L}{11.8}} = \sqrt{\frac{2(32.2)(46.2)}{11.8}} = 15.87 \text{ ft/s}: A_2 = \frac{\pi(4 \text{ in})^2}{4}\frac{\text{ft}^2}{144 \text{ in}^2} = 0.0873 \text{ ft}^2$$

$Q_2 = A_2\upsilon_2 = (0.0873 \text{ ft}^2)(15.87 \text{ ft/s}) = \mathbf{1.385 \text{ ft}^3/\text{s}}$

$Q_{total} = Q_1 + Q_2 = 0.456 + 1.385 = \mathbf{1.841 \text{ ft}^3/\text{s}}$

b. Valve in branch 2 open:

$Q = Q_2 = \mathbf{1.385 \text{ ft}^3/\text{s}}$

c. Valve in branch 1 open:

$Q = Q_1 = \mathbf{0.456 \text{ ft}^3/\text{s}}$

12.7 **Hardy Cross technique - Data from Prob. 12.4**

$Q_8 = 3.01 \text{ ft}^3/\text{s};\ h_6 = [989f_6 + 7.5]\frac{\upsilon_6^2}{2g}$

$h_2 = [2902f_2 + 1.14]\frac{\upsilon_2^2}{2g}$

Restate h_6 and h_2 in terms of Q_6 and Q_2

$$h_6 = [989f_6 + 7.5]\frac{Q_6^2}{2gA_6^2} = [989f_6 + 7.5]\frac{Q_6^2}{2(32.2)(0.2006)^2}$$

$$h_6 = [989f_6 + 7.5](0.3859)Q_6^2 = [381.6f_6 + 2.894]Q_6^2$$

$$h_2 = [2902f_2 + 1.14]\frac{Q_2^2}{2gA_2^2} = [2902f_2 + 1.14]\frac{Q_2^2}{2(32.2)(0.02333)^2}$$

$$h_2 = [2902f_2 + 1.14](28.53)Q_2^2 = [82791f_2 + 32.52]Q_2^2$$

$$N_{R_6} = \frac{\upsilon_6 D_6 \rho}{\eta} = \frac{Q_6 D_6 \rho}{A_6 \mu}$$

$$N_{R_6} = \frac{Q_6(0.5054)(1.69)}{(0.2006)(8 \times 10^{-6})} = (5.322 \times 10^5)Q_6$$

$$N_{R_2} = \frac{\upsilon_2 D_2 \rho}{\eta} = \frac{Q_2 D_2 \rho}{A_2 \mu}$$

$$N_{R_2} = \frac{Q_2(0.1723)(1.69)}{(0.2333)(8 \times 10^{-6})} = (1.560 \times 10^6)Q_2$$

$$\left(\frac{D}{\varepsilon}\right)_6 = 3369; \left(\frac{D}{\varepsilon}\right)_2 = 1149 \text{ (From Prob. 12.4)}$$

Try $Q_6 = 2.50\ \text{ft}^3/\text{s}$; $Q_2 = 3.01 - Q_6 = 0.51\ \text{ft}^3/\text{s}$

$N_{R_6} = (5.322 \times 10^5)(2.50) = 1.33 \times 10^6; f_6 = 0.0160$

$N_{R_2} = (1.560 \times 10^6)(0.51) = 7.96 \times 10^5; f_2 = 0.0195$

Friction factors found from Moody's diagram.

$h_6 = [381.6(0.016) + 2.894]Q_6^2 = 9.000Q_6^2 = k_6 Q_6^2$

$h_2 = [82791(0.0195) + 32.52]Q_2^2 = 1647Q_2^2 = k_2 Q_2^2$

TRIAL	PIPE	Q	N_R	f	k	(I) $h = kQ^2$	(II) $2kQ$	ΔQ = (I)/(II)
1	6	2.50	1.33×10^6	0.0160	9.000	56.25	45.00	−0.21575
	2	−0.51	7.96×10^5	0.0195	1647	−428.4	1679.94	
						−372.15	1724.94	
2	6	2.716	1.45×10^6	0.016	9.000	66.39	48.89	−0.07635
	2	−0.294	4.59×10^5	0.020	1688	−145.9	992.5	
						−79.51	1041.4	
3	6	2.792	1.49×10^6	0.016	9.000	70.16	50.26	−0.01253
	2	−0.2177	3.40×10^5	0.020	1688	−80.00	734.95	
						−9.84	785.21	
4	6	2.805	1.49×10^6	0.016	9.000	70.81	50.49	−0.00037
	2	−0.205	3.20×10^5	0.020	1688	−71.05	692.65	(Negligible)
						−0.24	642.16	

$Q_6 = 2.805\ \text{ft}^3/\text{s}$; $Q_2 = 0.205\ \text{ft}^3/\text{s}$

12.8 Data from Prob. 12.3 - Hardy Cross technique

$A_a = A_b = 2.168 \times 10^{-3}\ \text{m}^2$; $\nu = 1.30 \times 10^{-6}\ \text{m}^2/\text{s}$

$$Q_A = 850\ \text{L/min} \times \frac{1\ \text{m}^3/\text{s}}{60000\ \text{L/min}} = 1.417 \times 10^{-2}\ \text{m}^3/\text{s}$$

$$h_a = 571 f_a \frac{v_a^2}{2g} = \frac{571 f_a Q_a^2}{2gA_a^2}$$

$$h_a = \frac{571 f_a Q_a^2}{2(9.81)(2.168 \times 10^{-3})^2} = (6.192 \times 10^6) f_a Q_a^2$$

$$h_b = [1142 f_b + 4.56]\frac{v_b^2}{2g} = \frac{[1142 f_b + 4.56]Q_b^2}{2gA^2}$$

$$h_b = \frac{[1142 f_b + 4.56]Q_b^2}{2(9.81)(2.168 \times 10^{-3})^2} = [1142 f_b + 4.56](1.084 \times 10^4) Q_b^2$$

$$N_{R_a} = \frac{\upsilon_a D_a}{\nu} = \frac{Q_a D_a}{A_a \nu} = \frac{Q_a(0.0525)}{(2.168\times10^{-3})(1.30\times10^{-6})}$$

$N_{R_a} = (1.863 \times 10^7)Q_a$; $N_{R_b} = (1.863 \times 10^7)Q_b$

Trial 1

Try $Q_a = 0.0100\ \text{m}^3/\text{s}$

$Q_b = Q_A - Q_a = 0.01417 - 0.0100 = 0.00417\ \text{m}^3/\text{s}$

Then $N_{R_a} = (1.863 \times 10^7)(0.010) = 1.86 \times 10^5$

$N_{R_b} = (1.863 \times 10^7)(0.00417) = 7.77 \times 10^4$

$(D/\varepsilon)_a = (D/\varepsilon)_b = (0.0525/4.6 \times 10^{-5}) = 1141$

Compute f using Eq. (9.9):

$$f_a = \frac{0.25}{\left[\log\left(\frac{1}{3.7(1141)} + \frac{5.74}{\left(1.86\times10^5\right)^{0.9}}\right)\right]^2} = 0.0208$$

$$f_b = \frac{0.25}{\left[\log\left(\frac{1}{3.7(1141)} + \frac{5.74}{\left(7.77\times10^4\right)^{0.9}}\right)\right]^2} = 0.0225$$

NETWORK ANALYSIS USING HARDY CROSS TECHNIQUE

TWO BRANCHES PROBLEM 12.8 (DATA FROM PROBLEM 12.3)

TRIAL	CIRCUIT	PIPE	Q	REY. NO.	FR. FACT.	k	h = kQ^2	2kQ	DELTA Q	% CHANGE
1	1	a	1.000E-02	1.86E+05	0.0208	1.29E+05	12.873	2575		13.50
		b	-4.170E-03	7.77E+04	0.0225	3.28E+05	-5.704	2736		-32.37
						SUM OF h AND 2kQ =	7.168	5310	1.350E-03	
2	1	a	8.650E-03	1.61E+05	0.0210	1.30E+05	9.733	2250		-0.02
		b	-5.520E-03	1.03E+05	0.0218	3.20E+05	-9.745	3531		0.04
						SUM OF h AND 2kQ =	-0.012	5781	-2.005E-06	
3	1	a	8.652E-03	1.61E+05	0.0210	1.30E+05	9.737	2251		0.00
		b	-5.518E-03	1.03E+05	0.0218	3.20E+05	-9.738	3530		0.00
						SUM OF h AND 2kQ =	0.000	5781	-8.069E-08	

FINAL VALUES FOR FLOW RATES FROM TRIAL 3:

PIPE a: Q = 0.00865 cu. m/s   PIPE a: Q = 519 L/min

PIPE b: Q = 0.00552 cu. m/s   PIPE b: Q = 331 L/min

12.9 2 1/2-in Sch. 40 pipes: $D = 0.2058$ ft; $A = 0.03326$ ft^2

General form for k

$$h = kQ^2 = \frac{fL}{D}\frac{\upsilon^2}{2g} = \frac{fLQ^2}{D2gA^2}$$

$$\therefore k = \frac{fL}{D2gA^2}$$

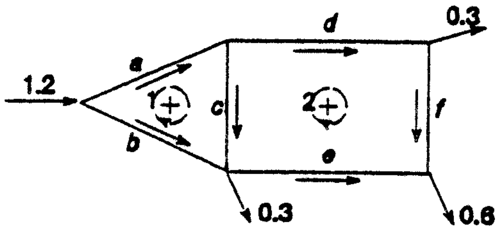

$$k_a = k_b = k_d = k_e = \frac{f(50)}{(0.2058)(64.4)(0.03326)^2}$$
$$= 3410f$$

$$k_c = k_f = \frac{f(30)}{(0.2058)(64.4)(0.03326)^2} = 2046f$$

Values of f to be computed.
For all pipes $D/\varepsilon = 0.2058/1.5 \times 10^{-4} = 1372$
Use water at 60°F; $\nu = 1.21 \times 10^{-5}$ ft^2/s

$$N_R = \frac{\upsilon D}{\nu} = \frac{QD}{A\nu} = \frac{Q(0.2058)}{(0.03326)(1.21\times10^{-5})} = (5.114 \times 10^5)Q$$

Use Eq. (9.9) to compute f:

$$f = \frac{0.25}{\left[\log\left(\frac{1}{3.7(1372)} + \frac{5.74}{(N_R)^{0.9}}\right)\right]^2}$$

$$f = \frac{0.25}{\left[\log\left(\frac{1}{1.970\times10^{-4}} + \frac{5.74}{(N_R)^{0.9}}\right)\right]^2}$$

For Trial 1: Flow equations at nodes:

$Q_a + Q_b = 1.2$ ft^3/s
Try $Q_a = 0.50$; $Q_b = 0.70$

$Q_c + Q_d = Q_a = 0.50$
Try $Q_c = 0.10$; $Q_d = 0.40$

$Q_d - Q_f = 0.30$ ft^3/s
Try $Q_d = 0.40$, $Q_f = 0.10$

$Q_e + Q_f = 0.60$ ft^3/s
Try $Q_f = 0.10$; $Q_e = 0.50$

$Q_b + Q_c = Q_e + 0.30$ ft^3/s
0.70 + 0.10 = 0.50 + 0.30 (check)

Compute N_R values for Trial 1:

$N_{R_a} = (5.114 \times 10^5)(Q_a) = (5.114 \times 10^5)(0.50) = 2.557 \times 10^5$

Similarly,

$N_{R_b} = 3.580 \times 10^5$; $N_{R_c} = 5.114 \times 10^4$; $N_{R_d} = 2.045 \times 10^5$

$N_{R_a} = 2.557 \times 10^5$; $N_{R_f} = 5.114 \times 10^4$

Compute f values for Eq. 9.9:

$$f_a = \frac{0.25}{\left[\log\left((1.970 \times 10^{-4}) + \frac{5.74}{(2.557 \times 10^5)^{0.9}}\right)\right]^2} = 0.0197$$

$k_a = (3410)(0.0197) = 67.18$

Similarly:

PIPE	f	k	Eq. for k
a	0.0197	67.18	$k_a = 3410 f_a$
b	0.0194	66.00	$k_b = 3410 f_b$
c	0.0233	47.65	$k_c = 2046 f_c$
d	0.0200	68.26	$k_d = 3410 f_d$
e	0.0197	67.18	$k_e = 3410 f_e$
f	0.0233	47.65	$k_f = 2046 f_f$

NETWORK ANALYSIS USING HARDY CROSS TECHNIQUE

TWO CIRCUITS PROBLEM 12.9

TRIAL	CIRCUIT	PIPE	Q	REY. NO.	FR. FACT.	k	h = kQ^2	2kQ	DELTA Q	% CHANGE
1	1	a	0.5000	2.56E+05	0.0197	67.24	16.810	67.24		-17.79
		b	-0.7000	3.58E+05	0.0194	65.99	-32.337	92.39		12.71
		c	0.1000	5.11E+04	0.0233	47.64	0.476	9.53		-88.97
					SUM OF h AND 2kQ =		-15.051	169.16	-8.897E-02	
	2	c	-0.1000	5.11E+04	0.0233	47.64	-0.476	9.53		41.80
		d	0.4000	2.05E+05	0.0200	68.25	10.921	54.60		-10.45
		e	-0.5000	2.56E+05	0.0197	67.24	-16.810	67.24		8.36
		f	0.1000	5.11E+04	0.0233	47.64	0.476	9.53		-41.80
					SUM OF h AND 2kQ =		-5.889	140.90	-4.180E-02	
2	1	a	0.5890	3.01E+05	0.0195	66.59	23.101	78.44		-0.72
		b	-0.6110	3.12E+05	0.0195	66.46	-24.813	81.22		0.69
		c	0.1472	7.53E+04	0.0221	45.17	0.978	13.30		-2.88
					SUM OF h AND 2kQ =		-0.734	172.96	-4.241E-03	
	2	c	-0.1472	7.53E+04	0.0221	45.17	-0.978	13.30		4.74
		d	0.4418	2.26E+05	0.0199	67.78	13.230	59.89		-1.58
		e	-0.4582	2.34E+05	0.0198	67.62	-14.196	61.96		1.52
		f	0.1418	7.25E+04	0.0222	45.38	0.913	12.87		-4.92
					SUM OF h AND 2kQ =		-1.032	148.02	-6.972E-03	
3	1	a	0.5932	3.03E+05	0.0195	66.57	23.425	78.98		-0.11
		b	-0.6068	3.10E+05	0.0195	66.48	-24.479	80.68		0.10
		c	0.1444	7.39E+04	0.0221	45.28	0.945	13.08		-0.44
					SUM OF h AND 2kQ =		-0.109	172.74	-6.294E-04	
	2	c	-0.1444	7.39E+04	0.0221	45.28	-0.945	13.08		0.43
		d	0.4488	2.30E+05	0.0199	67.71	13.636	60.77		-0.14
		e	-0.4512	2.31E+05	0.0198	67.69	-13.781	61.08		0.14
		f	0.1488	7.61E+04	0.0220	45.11	0.998	13.42		-0.41
					SUM OF h AND 2kQ =		-0.091	148.36	-6.150E-04	

continued

12.9 (continued)

TRIAL	CIRCUIT	PIPE	Q	REY. NO.	FR. FACT.	k	h = kQ^2	2kQ	DELTA Q	% CHANGE
4	1	a	0.5938	3.04E+05	0.0195	66.56	23.474	79.06		-0.01
		b	-0.6062	3.10E+05	0.0195	66.49	-24.429	80.60		0.01
		c	0.1445	7.39E+04	0.0221	45.28	0.945	13.08		-0.04
					SUM OF h AND 2kQ =		-0.011	172.74	-6.261E-05	
	2	c	-0.1445	7.39E+04	0.0221	45.28	-0.945	13.08		0.05
		d	0.4494	2.30E+05	0.0199	67.70	13.673	60.85		-0.02
		e	-0.4506	2.30E+05	0.0199	67.69	-13.745	61.01		0.02
		f	0.1494	7.64E+04	0.0220	45.09	1.006	13.47		-0.05
					SUM OF h AND 2kQ =		-0.011	148.41	-7.565E-05	

SUMMARY OF RESULTS FROM TRIAL 4: (All flow rates in cubic feet /sec)

PIPE a: Q = 0.5938	PIPE d: Q = 0.4494
PIPE b: Q = 0.6062	PIPE e: Q = 0.4506
PIPE c: Q = 0.1445	PIPE f: Q = 0.1494

12.10 $Q_{in} = 6000 \text{ L/min} \times \dfrac{1.0 \text{ m}^3/\text{s}}{60000 \text{ L/min}} = 0.100 \text{ m}^3/\text{s} = 1.0 \times 10^{-1} \text{ m}^3/\text{s}$

$Q_{out} = 1500 \text{ L/min} = 0.025 \text{ m}^3/\text{s (Each)} = 2.5 \times 10^{-2} \text{ m}^3/\text{s}$

$h = f\dfrac{L}{D}\dfrac{\upsilon^2}{2g} = f\dfrac{L}{D}\dfrac{Q^2}{2gA^2} = kQ^2;\ k = \dfrac{fL}{D(2)gA^2}$

3-in Type K copper tubes: $D = 0.07384$ m; $A = 4.282 \times 10^{-3}$ m^2

$k = \dfrac{fL}{D(2)gA^2} = \dfrac{fL}{(0.07384)(2)(9.81)(4.282\times10^{-3})^2} = (3.765 \times 10^4)fL$

For tubes c, f: $L = 6.0$ m; $k = (2.259 \times 10^5)f$
For tubes d, b, e, h: $L = 15$ m; $k = (5.647 \times 10^5)f$
For tubes a, g: $L = 18$ m (Ignore minor losses); $k = (6.776 \times 10^5)f$

For all tubes: Water at 15°C; $\nu = 1.15 \times 10^{-6}$ m^2/s

$N_R = \dfrac{\upsilon D}{\nu} = \dfrac{QD}{A\nu} = \dfrac{Q(0.07384)}{(4.282\times10^{-3})(1.15\times10^{-6})} = (1.500 \times 10^7)Q$

$D/\varepsilon = (0.07384)/(1.5 \times 10^{-6} \text{ m}) = 49227$

Use Eq. 9.9 to compute f:

$$f = \frac{0.25}{\left[\log\left(\dfrac{1}{3.7D/\varepsilon} + \dfrac{5.74}{(N_R)^{0.9}}\right)\right]^2} = \frac{0.25}{\left[\log\left(5.49\times10^{-6} + \dfrac{5.74}{(N_R)^{0.9}}\right)\right]^2}$$

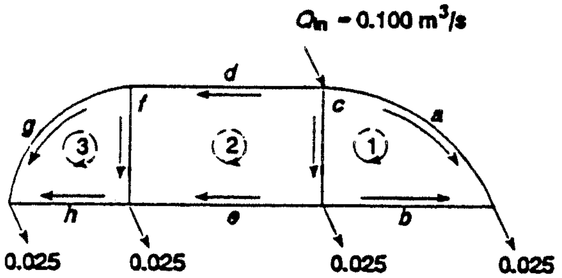

For continuity at joints:

(I) $Q_a + Q_c + Q_d = 0.100$ (II) $Q_a + Q_b = 0.025$	(III) $Q_c = 0.025 + Q_b + Q_e$ (IV) $Q_f + Q_e = Q_h + 0.025$	(V) $Q_d = Q_f + Q_g$ (VI) $Q_g + Q_h = 0.025$

For Trial 1:

$Q_a = 2.0 \times 10^{-2}$ (Assume) $Q_b = 0.5 \times 10^{-2}$ (II) $Q_c = 4.0 \times 10^{-2}$ (Assume)	$Q_d = 4.0 \times 10^{-2}$ (I) $Q_e = 1.0 \times 10^{-2}$ (III) $Q_f = 2.0 \times 10^{-2}$ (Assume)	$Q_g = 2.0 \times 10^{-2}$ (V) $Q_h = 0.5 \times 10^{-2}$ (VI)

NETWORK ANALYSIS USING HARDY CROSS TECHNIQUE

THREE CIRCUITS PROBLEM 12.10

TRIAL	CIRCUIT	PIPE	Q	REY. NO.	FR. FACT.	k	h = kQ^2	2kQ	DELTA Q	% CHANGE
	1	a	0.0200	3.00E+05	0.0146	9900	3.960	396.00		-6.89
1		b	-0.0050	7.50E+04	0.0191	10781	-0.270	107.81		27.58
		c	-0.0400	6.00E+05	0.0130	2944	-4.710	235.49		3.45
					SUM OF h AND 2kQ =		-1.019	739.31	-1.379E-03	
	2	c	0.0400	6.00E+05	0.0130	2944	4.710	235.49		-16.28
		d	-0.0400	6.00E+05	0.0130	7359	-11.774	588.69		16.28
		e	0.0100	1.50E+05	0.0166	9373	0.937	187.45		-65.11
		f	-0.0200	3.00E+05	0.0146	3300	-1.320	132.02		32.56
					SUM OF h AND 2kQ =		-7.447	1143.65	-6.511E-03	
	3	f	0.0200	3.00E+05	0.0146	3300	1.320	132.02		-18.64
		g	-0.0200	3.00E+05	0.0146	9900	-3.960	396.00		18.64
		h	0.0050	7.50E+04	0.0191	10781	0.270	107.81		-74.56
					SUM OF h AND 2kQ =		-2.370	635.83	-3.728E-03	
	1	a	0.0214	3.21E+05	0.0144	9786	4.473	418.42		-9.60
2		b	-0.0036	5.43E+04	0.0205	11557	-0.152	83.70		56.65
		c	-0.0451	6.77E+05	0.0128	2890	-5.886	260.85		4.55
					SUM OF h AND 2kQ =		-1.565	762.97	-2.051E-03	
	2	c	0.0451	6.77E+05	0.0128	2890	5.886	260.85		-2.43
		d	-0.0335	5.02E+05	0.0134	7568	-8.487	506.85		3.27
		e	0.0165	2.48E+05	0.0151	8536	2.327	281.88		-6.64
		f	-0.0172	2.58E+05	0.0150	3389	-1.005	116.70		6.37
					SUM OF h AND 2kQ =		-1.278	1166.27	-1.096E-03	
	3	f	0.0172	2.58E+05	0.0150	3389	1.005	116.70		-9.21
		g	-0.0163	2.44E+05	0.0152	10269	-2.719	334.21		9.75
		h	0.0087	1.31E+05	0.0170	9624	0.733	168.00		-18.17
					SUM OF h AND 2kQ =		-0.981	618.90	-1.586E-03	

continued

12.10 (continued)

TRIAL	CIRCUIT	PIPE	Q	REY. NO.	FR. FACT.	k	h = kQ^2	2kQ	DELTA Q	% CHANGE
	1	a	0.0234	3.51E+05	0.0142	9633	5.288	451.42		-2.30
3		b	-0.0016	2.35E+04	0.0248	14029	-0.035	44.04		34.26
		c	-0.0442	6.63E+05	0.0128	2899	-5.658	256.15		1.22
					SUM OF h AND 2kQ =		-0.404	751.61	-5.378E-04	
	2	c	0.0442	6.63E+05	0.0128	2899	5.658	256.15		-1.49
		d	-0.0324	4.86E+05	0.0135	7608	-7.983	492.90		2.03
		e	0.0176	2.64E+05	0.0149	8438	2.616	297.15		-3.73
		f	-0.0177	2.66E+05	0.0149	3372	-1.057	119.42		3.71
					SUM OF h AND 2kQ =		-0.766	1165.61	-6.575E-04	
	3	f	0.0177	2.66E+05	0.0149	3372	1.057	119.42		-1.90
		g	-0.0147	2.20E+05	0.0154	10462	-2.257	307.31		2.29
		h	0.0103	1.55E+05	0.0165	9317	0.991	192.18		-3.26
					SUM OF h AND 2kQ =		-0.208	618.91	-3.366E-04	
	1	a	0.0240	3.60E+05	0.0142	9596	5.513	460.00		-1.06
4		b	-0.0010	1.55E+04	0.0276	15588	-0.017	32.17		24.63
		c	-0.0443	6.64E+05	0.0128	2898	-5.686	256.74		0.57
					SUM OF h AND 2kQ =		-0.190	748.91	-2.542E-04	
	2	c	0.0443	6.64E+05	0.0128	2898	5.686	256.74		-0.44
		d	-0.0317	4.76E+05	0.0135	7633	-7.688	484.50		0.61
		e	0.0183	2.74E+05	0.0148	8383	2.797	306.24		-1.07
		f	-0.0174	2.61E+05	0.0150	3383	-1.023	117.64		1.12
					SUM OF h AND 2kQ =		-0.227	1165.11	-1.951E-04	
	3	f	0.0174	2.61E+05	0.0150	3383	1.023	117.64		-0.85
		g	-0.0143	2.15E+05	0.0155	10507	-2.164	301.54		1.02
		h	0.0107	1.60E+05	0.0164	9260	1.050	197.24		-1.38
					SUM OF h AND 2kQ =		-0.091	616.42	-1.470E-04	

continued

12.10 (continued)

TRIAL	CIRCUIT	PIPE	Q	REY. NO.	FR. FACT.	k	h = kQ^2	2kQ	DELTA Q	% CHANGE
5	1	a	0.0242	3.63E+05	0.0141	9579	5.620	464.04		-0.35
		b	-0.0008	1.17E+04	0.0297	16793	-0.010	26.12		10.75
		c	-0.0442	6.64E+05	0.0128	2899	-5.672	256.45		0.19
					SUM OF h AND 2kQ =		-0.062	746.62	-8.361E-05	
	2	c	0.0442	6.64E+05	0.0128	2899	5.672	256.45		-0.18
		d	-0.0315	4.73E+05	0.0135	7641	-7.601	482.00		0.26
		e	0.0185	2.77E+05	0.0148	8368	2.851	308.93		-0.44
		f	-0.0173	2.60E+05	0.0150	3385	-1.017	117.37		0.47
					SUM OF h AND 2kQ =		-0.095	1164.75	-8.142E-05	
	3	f	0.0173	2.60E+05	0.0150	3385	1.017	117.37		-0.27
		g	-0.0142	2.13E+05	0.0155	10527	-2.123	299.02		0.34
		h	0.0108	1.62E+05	0.0164	9236	1.077	199.44		-0.44
					SUM OF h AND 2kQ =		-0.029	615.83	-4.759E-05	
6	1	a	2.431E-02	3.65E+05	0.0141	9573	5.656	465.37		-0.14
		b	-6.941E-04	1.04E+04	0.0307	17318	-0.008	24.04		4.74
		c	-4.424E-02	6.64E+05	0.0128	2899	-5.672	256.44		0.07
					SUM OF h AND 2kQ =		-0.025	745.86	-3.289E-05	
	2	c	4.424E-02	6.64E+05	0.0128	2899	5.672	256.44		-0.06
		d	-3.146E-02	4.72E+05	0.0135	7644	-7.565	480.96		0.09
		e	1.854E-02	2.78E+05	0.0148	8361	2.874	310.05		-0.15
		f	-1.730E-02	2.60E+05	0.0150	3386	-1.014	117.18		0.16
					SUM OF h AND 2kQ =		-0.033	1164.63	-2.812E-05	
	3	f	1.730E-02	2.60E+05	0.0150	3386	1.014	117.18		-0.11
		g	-1.416E-02	2.12E+05	0.0155	10533	-2.111	298.20		0.13
		h	1.084E-02	1.63E+05	0.0163	9228	1.085	200.15		-0.17
					SUM OF h AND 2kQ =		-0.011	615.53	-1.855E-05	

continued

12.10 (continued)

TRIAL 6 PRODUCED % CHANGE < 0.2% FOR ALL BUT PIPE b WHICH CARRIES VERY LOW FLOW.
RESULTS SUMMARIZED BELOW WITH FLOW RATES CONVERTED TO L/min.

PIPE a: Q = 1458	PIPE c: Q = 2654	PIPE e: Q = 1112	PIPE g: Q = 849
PIPE b: Q = 42	PIPE d: Q = 1888	PIPE f: Q = 1038	PIPE h: Q = 651

12.11 Hardy Cross technique = Data preparation

$$h = kQ^2 = \frac{fL}{D}\frac{\upsilon^2}{2g} = \frac{fLQ^2}{D2gA^2} : k = \frac{fL}{D2gA^2}$$

①,②, ⑥ $k = \dfrac{f(1500)}{(1.25)(64.4)(1.227)^2}1 = 12.38f$

16-in pipe

③ $k = \dfrac{f(2000)}{(1.406)(64.4)(1.553)^2} = 9.158f$

18-in pipe

④ $k = \dfrac{f(2000)}{(0.9948)(64.4)(0.7771)^2} = 51.70f$

12-in pipe

⑤ $k = \dfrac{f(2000)}{(1.25)(64.4)(1.227)^2} = 16.50f$

16-in pipe

⑦, ⑪ $k = \dfrac{f(1500)}{(0.9948)(64.4)(0.7771)^2} = 38.77f$

12-in pipe

⑧ $k = \dfrac{f(4000)}{(1.094)(64.4)(0.9396)^2} = 64.31f$

14-in pipe

⑨ $k = \dfrac{f(4000)}{(0.9948)(64.4)(0.7771)^2} = 103.39f$

12-in pipe

⑩ $k = \dfrac{f(4000)}{(0.6651)(64.4)(0.3472)^2} = 774.69f$

8-in pipe

⑫ $k = \dfrac{f(1500)}{(0.6651)(64.4)(0.3472)^2} = 290.51f$

8-in pipe

Reynolds numbers: Assume water at 60°F; $v = 1.21 \times 10^{-5}$ ft^2/s

16-in pipes:

①, ②,⑤,⑥

$$N_R = \frac{\upsilon D}{\nu} = \frac{QD}{A\nu} = \frac{Q(1.25)}{(1.227)(1.21 \times 10^{-5})} = (8.419 \times 10^4)Q$$

$D/\varepsilon = 1.25/1.5 \times 10^{-4} = 8333$

Similarly:
18-in pipe: ③: $N_R = (7.482 \times 10^4)Q$; $D/\varepsilon = 9373$
14-in pipe: ⑧: $N_R = (9.623 \times 10^4)Q$; $D/\varepsilon = 7293$
12-in pipes: ④, ⑦, ⑨, ⑪: $N_R = (1.058 \times 10^5)Q$; $D/\varepsilon = 6632$
8-in pipes: ⑩, ⑫, $N_R = (1.583 \times 10^5)Q$; $D/\varepsilon = 4434$

To satisfy continuity at joints:

③ + ① = 15.5 ft^3/s
② + ④ = ①
② = 1.5 ft^3/s + ⑤
③ = ⑥ + ⑧
④ + ⑥ = ⑦ + ⑨ + 1 ft^3/s
⑦ + ⑤ = ⑩ + 4 ft^3/s
⑧ = ⑪ + 3 ft^3/s
⑨ + ⑪ = ⑫ + 3 ft^3/s
⑩ + ⑫ = 3 ft^3/s

Initial estimates for flow rates for Trial 1: See spreadsheet.

NETWORK ANALYSIS USING THE HARDY CROSS TECHNIQUE						U.S. Cust Units
Prob # 12.11			4 Circuits			12 Pipes
Fluid: Water at 60 deg F				Fluid kinematic viscosity:		1.21E-05 ft²/s

Pipe #	ID (ft)	Length (ft)	Roughness ε (ft)	D/ε	C1 (k=C1**f*)	C2 (N_R=C2*Q)
1	1.2500	1500	1.50E-04	8333	12.37	8.42E+04
2	1.2500	1500	1.50E-04	8333	12.37	8.42E+04
3	1.4060	2000	1.50E-04	9373	9.16	7.48E+04
4	0.9948	2000	1.50E-04	6632	51.68	1.06E+05
5	1.2500	2000	1.50E-04	8333	16.50	8.42E+04
6	1.2500	1500	1.50E-04	8333	12.37	8.42E+04
7	0.9948	1500	1.50E-04	6632	38.76	1.06E+05
8	1.0940	4000	1.50E-04	7293	64.26	9.62E+04
9	0.9948	4000	1.50E-04	6632	103.35	1.06E+05
10	0.6651	4000	1.50E-04	4434	773.68	1.58E+05
11	0.9948	1500	1.50E-04	6632	38.76	1.06E+05
12	0.6651	1500	1.50E-04	4434	290.13	1.58E+05

Trial 1

Circuit	Pipe	Q (ft³/s)	N_R	*f*	k	h = kQ²	2kQ	ΔQ	% Chg
1	1	7.0000	5.89E+05	0.0144	0.1788	8.7592	2.5026		2.12
	4	2.5000	2.64E+05	0.0162	0.8347	5.2171	4.1737		5.94
	6	-4.0000	3.37E+05	0.0154	0.1904	-3.0472	1.5236		-3.71
	3	-8.5000	6.36E+05	0.0142	0.1299	-9.3847	2.2082		-1.75
				Summations:		1.5445	10.4081	0.14839	
2	2	4.5000	3.79E+05	0.0152	0.1877	3.8008	1.6892		-3.60
	5	3.0000	2.53E+05	0.0160	0.2639	2.3748	1.5832		-5.39
	7	-2.0000	2.12E+05	0.0166	0.6451	-2.5806	2.5806		8.09
	4	-2.5000	2.64E+05	0.0162	0.8347	-5.2171	4.1737		6.47
				Summations:		-1.6221	10.0267	-0.16178	
3	6	4.0000	3.37E+05	0.0154	0.1904	3.0472	1.5236		1.60
	9	3.5000	3.70E+05	0.0155	1.6029	19.6360	11.2206		1.83
	11	-1.5000	1.59E+05	0.0174	0.6730	-1.5142	2.0190		-4.28
	8	-4.5000	4.33E+05	0.0151	0.9710	-19.6619	8.7386		-1.43
				Summations:		1.5071	23.5017	0.06413	
4	7	2.0000	2.12E+05	0.0166	0.6451	2.5806	2.5806		-18.43
	10	1.0000	1.58E+05	0.0179	13.8120	13.8120	27.6240		-36.87
	12	-2.0000	3.16E+05	0.0164	4.7639	-19.0556	19.0556		18.43
	9	-3.5000	3.70E+05	0.0155	1.6029	-19.6360	11.2206		10.53
				Summations:		-22.2991	60.4808	-0.3687	

continued

12.11 (continued)

Trial 2									
Circuit	Pipe	Q (ft³/s)	N_R	*f*	k	$h = kQ^2$	2kQ	ΔQ	% Chg
1	1	6.8516	5.77E+05	0.0145	0.1791	8.4099	2.4549		-0.56
	4	2.1898	2.32E+05	0.0164	0.8495	4.0737	3.7205		-1.76
	6	-4.0843	3.44E+05	0.0154	0.1899	-3.1686	1.5516		0.94
	3	-8.6484	6.47E+05	0.0142	0.1297	-9.6983	2.2428		0.44
				Summations:		-0.3833	9.9698	-0.03845	
2	2	4.6618	3.92E+05	0.0151	0.1869	4.0617	1.7426		-1.07
	5	3.1618	2.66E+05	0.0159	0.2619	2.6186	1.6564		-1.57
	7	-2.2069	2.33E+05	0.0164	0.6365	-3.0999	2.8092		2.25
	4	-2.1898	2.32E+05	0.0164	0.8495	-4.0737	3.7205		2.27
				Summations:		-0.4932	9.9287	-0.04967	
3	6	4.0843	3.44E+05	0.0154	0.1899	3.1686	1.5516		-3.65
	9	3.0672	3.24E+05	0.0157	1.6276	15.3121	9.9845		-4.86
	11	-1.5641	1.65E+05	0.0173	0.6687	-1.6360	2.0919		9.53
	8	-4.5641	4.39E+05	0.0151	0.9695	-20.1952	8.8495		3.27
				Summations:		-3.3504	22.4775	-0.14906	
4	7	2.2069	2.33E+05	0.0164	0.6365	3.0999	2.8092		-0.23
	10	1.3687	2.17E+05	0.0171	13.2579	24.8364	36.2921		-0.38
	12	-1.6313	2.58E+05	0.0168	4.8700	-12.9597	15.8888		0.32
	9	-3.0672	3.24E+05	0.0157	1.6276	-15.3121	9.9845		0.17
				Summations:		-0.3356	64.9746	-0.00517	

Trial 3									
Circuit	Pipe	Q (ft³/s)	N_R	*f*	k	$h = kQ^2$	2kQ	ΔQ	% Chg
1	1	6.8901	5.80E+05	0.0145	0.1790	8.4997	2.4672		-0.60
	4	2.1786	2.30E+05	0.0165	0.8501	4.0348	3.7041		-1.90
	6	-4.1949	3.53E+05	0.0153	0.1893	-3.3314	1.5883		0.99
	3	-8.6099	6.44E+05	0.0142	0.1297	-9.6165	2.2338		0.48
				Summations:		-0.4134	9.9934	-0.04136	
2	2	4.7115	3.97E+05	0.0151	0.1867	4.1435	1.7589		-0.39
	5	3.2115	2.70E+05	0.0158	0.2614	2.6958	1.6788		-0.57
	7	-2.1624	2.29E+05	0.0165	0.6382	-2.9843	2.7602		0.84
	4	-2.1786	2.30E+05	0.0165	0.8501	-4.0348	3.7041		0.83
				Summations:		-0.1799	9.9020	-0.01817	
3	6	4.1949	3.53E+05	0.0153	0.1893	3.3314	1.5883		-0.32
	9	3.2111	3.40E+05	0.0157	1.6189	16.6920	10.3965		-0.42
	11	-1.4151	1.50E+05	0.0175	0.6791	-1.3599	1.9220		0.95
	8	-4.4151	4.25E+05	0.0151	0.9730	-18.9662	8.5916		0.30
				Summations:		-0.3027	22.4984	-0.01345	
4	7	2.1624	2.29E+05	0.0165	0.6382	2.9843	2.7602		-1.12
	10	1.3739	2.17E+05	0.0171	13.2518	25.0127	36.4123		-1.76
	12	-1.6261	2.57E+05	0.0168	4.8717	-12.8824	15.8442		1.48
	9	-3.2111	3.40E+05	0.0157	1.6189	-16.6920	10.3965		0.75
				Summations:		-1.5774	65.4132	-0.02411	

continued

12.11 (continued)

Trial 4									
Circuit	Pipe	Q (ft³/s)	N_R	*f*	k	h = kQ²	2kQ	ΔQ	% Chg
1	1	6.9314	5.83E+05	0.0145	0.1789	8.5969	2.4806		-0.15
	4	2.2018	2.33E+05	0.0164	0.8489	4.1153	3.7381		-0.48
	6	-4.1670	3.51E+05	0.0153	0.1895	-3.2899	1.5791		0.26
	3	-8.5686	6.41E+05	0.0142	0.1298	-9.5290	2.2242		0.12
				Summations:		-0.1067	10.0219	-0.01065	
2	2	4.7296	3.98E+05	0.0151	0.1866	4.1736	1.7649		-0.46
	5	3.2296	2.72E+05	0.0158	0.2612	2.7242	1.6870		-0.68
	7	-2.1684	2.29E+05	0.0165	0.6380	-2.9996	2.7667		1.01
	4	-2.2018	2.33E+05	0.0164	0.8489	-4.1153	3.7381		0.99
				Summations:		-0.2171	9.9568	-0.02180	
3	6	4.1670	3.51E+05	0.0153	0.1895	3.2899	1.5791		-0.34
	9	3.2004	3.39E+05	0.0157	1.6195	16.5878	10.3661		-0.44
	11	-1.4016	1.48E+05	0.0175	0.6801	-1.3361	1.9065		1.00
	8	-4.4016	4.23E+05	0.0151	0.9733	-18.8571	8.5683		0.32
				Summations:		-0.3155	22.4199	-0.01407	
4	7	2.1684	2.29E+05	0.0165	0.6380	2.9996	2.7667		-0.19
	10	1.3980	2.21E+05	0.0171	13.2238	25.8437	36.9730		-0.29
	12	-1.6020	2.53E+05	0.0168	4.8800	-12.5245	15.6358		0.26
	9	-3.2004	3.39E+05	0.0157	1.6195	-16.5878	10.3661		0.13
				Summations:		-0.2689	65.7416	-0.00409	

Trial 5									
Circuit	Pipe	Q (ft³/s)	N_R	*f*	k	h = kQ²	2kQ	ΔQ	% Chg
1	1	6.9421	5.84E+05	0.0145	0.1789	8.6220	2.4840		-0.15
	4	2.1906	2.32E+05	0.0164	0.8495	4.0765	3.7217		-0.47
	6	-4.1704	3.51E+05	0.0153	0.1895	-3.2950	1.5802		0.25
	3	-8.5579	6.40E+05	0.0142	0.1298	-9.5065	2.2217		0.12
				Summations:		-0.1030	10.0076	-0.01029	
2	2	4.7514	4.00E+05	0.0151	0.1865	4.2099	1.7721		-0.13
	5	3.2514	2.74E+05	0.0158	0.2609	2.7586	1.6969		-0.19
	7	-2.1506	2.27E+05	0.0165	0.6387	-2.9541	2.7472		0.29
	4	-2.1906	2.32E+05	0.0164	0.8495	-4.0765	3.7217		0.29
				Summations:		-0.0621	9.9379	-0.00625	
3	6	4.1704	3.51E+05	0.0153	0.1895	3.2950	1.5802		-0.08
	9	3.2104	3.40E+05	0.0157	1.6189	16.6854	10.3946		-0.10
	11	-1.3875	1.47E+05	0.0176	0.6812	-1.3115	1.8904		0.24
	8	-4.3875	4.22E+05	0.0152	0.9737	-18.7434	8.5439		0.08
				Summations:		-0.0745	22.4091	-0.00332	
4	7	2.1506	2.27E+05	0.0165	0.6387	2.9541	2.7472		-0.15
	10	1.4021	2.22E+05	0.0171	13.2191	25.9860	37.0681		-0.23
	12	-1.5979	2.53E+05	0.0168	4.8814	-12.4642	15.6004		0.20
	9	-3.2104	3.40E+05	0.0157	1.6189	-16.6854	10.3946		0.10
				Summations:		-0.2095	65.8103	-0.00318	

12.12 $h = kQ^2 = f\dfrac{L}{D}\dfrac{\upsilon^2}{2g} = \dfrac{fLQ^2}{D(2g)A^2}$; $k = \dfrac{fL}{D(2g)A^2}$

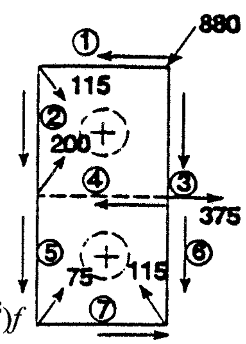

①③ $k = \dfrac{f(7.5)}{(0.0475)(2)(9.81)(1.772\times10^{-3})^2}2 = (2.56 \times 10^6)f$

② $k = \dfrac{f(7.5)}{(0.0348)(2)(9.81)(9.510\times10^{-4})^2} = (1.21 \times 10^7)f$

④⑤⑥⑦ $k = \dfrac{f(7.5)}{(0.0221)(2)(9.81)(3.835\times10^{-4})^2} = (1.18 \times 10^8)f$

Fluid is a coolant: sg = 0.92, $\eta = 2.00 \times 10^{-3}$ Pa·s
Reynolds numbers and relative roughness

Pipes 1, 3: $N_R = \dfrac{\upsilon D\rho}{\eta} = \dfrac{QD\rho}{A\eta} = \dfrac{Q(0.0475)(920)}{(1.772\times10^{-3})(2.00\times10^{-3})}$

$N_R = (1.233 \times 10^7)Q$
$D/\varepsilon = 0.0475/1.5 \times 10^{-6} = 31667$

Pipe 2: $N_R = \dfrac{QD\rho}{A\eta} = \dfrac{Q(0.0348)(920)}{(9.510\times10^{-4})(2.00\times10^{-3})} = (1.683\times10^7)Q$

$D/\varepsilon = 0.0348/1.5 \times 10^{-6} = 23200$

Pipes 4, 5, 6, 7: $N_R = \dfrac{QD\rho}{A\eta} = \dfrac{Q(0.0221)(920)}{(3.835\times10^{-4})(2.00\times10^{-3})} = (2.651 \times 10^7)Q$

$D/\varepsilon = 0.0221/1.5 \times 10^{-6} = 14733$

Compute f using Eq. 9.9.

For continuity at the joints:

(I) $Q_1 + Q_3 = 880$ L/min $= 1.467 \times 10^{-2}$ m³/s
(II) $Q_1 = Q_2 + 115$ L/min
$= Q_2 + 1.917 \times 10^{-3}$ m³/s
(III) $Q_3 = Q_4 + Q_6 + 375$ L/min
$= Q_4 + Q_6 + 6.250 \times 10^{-3}$

(IV) $Q_2 + Q_4 = Q_5 + 200$ L/min
$= Q_5 + 3.333 \times 10^{-3}$ m³/s
(V) $Q_6 + Q_7 = 115$ L/min
$= 1.917 \times 10^{-3}$ m³/s
(VI) $Q_5 = Q_7 + 75$ L/min $= Q_7 + 1.250 \times 10^{-3}$ m³/s

Trial 1: Assumptions

$Q_1 = 350$ L/min $= 5.833 \times 10^{-3}$ m³/s ← Initial assumption
$Q_2 = Q_1 - 115$ L/min $= 235$ L/min $= 3.917 \times 10^{-3}$ m³/s ↓ Continuity cond.(II)
$Q_3 = 880$ L/min $- Q_1 = 530$ L/min $= 8.833 \times 10^{-3}$ m³/s ↓ Cont. cond.(I)
$Q_4 = 60$ L/min $= 1.000 < 10^{-3}$ m³/s ← Initial assumption
$Q_5 = Q_2 + Q_4 - 200$ L/min $= 95$ L/min $= 1.583 \times 10^{-3}$ m³/s ↓ Cont. cond. (IV)
$Q_6 = Q_3 - Q_4 - 375$ L/min $= 95$ L/min $= 1.583 \times 10^{-3}$ m³/s ↓ Cont. cond. (III)
$Q_7 = 115$ L/min $- Q_6 = 20$ L/min $= 3.333 \times 10^{-4}$ m³/s → Cont. cond. (V)

NETWORK ANALYSIS USING THE HARDY CROSS TECHNIQUE							U.S. Cust Units
Prob # 12.12			2 Circuits				7 Pipes-drawn steel tubing
Fluid: Coolant				Fluid kinematic viscosity:			2.17E-06 m^2/s
Pipe #	D (m)	Length (m)	Roughness ε (m)	D/ε	C1 (k=C1*f)	C2 (N_R=C2*Q)	Initial Q L/min
1	0.0475	7.5	1.50E-06	31667	2.56E+06	1.23E+07	350
2	0.0348	7.5	1.50E-06	23200	1.21E+07	1.68E+07	235
3	0.0475	7.5	1.50E-06	31667	2.56E+06	1.23E+07	530
4	0.0221	7.5	1.50E-06	14733	1.18E+08	2.65E+07	60
5	0.0221	7.5	1.50E-06	14733	1.18E+08	2.65E+07	95
6	0.0221	7.5	1.50E-06	14733	1.18E+08	2.65E+07	95
7	0.0221	7.5	1.50E-06	14733	1.18E+08	2.65E+07	20

Trial 1

Circuit	Pipe	Q (m^3/s)	N_R	*f*	k	h = kQ^2	2kQ	ΔQ	% Chg
1	1	-5.833E-03	7.19E+04	0.0193	4.95E+04	-1.6845	577.6		-1.99
	2	-3.917E-03	6.59E+04	0.0197	2.40E+05	-3.6759	1876.9		-2.97
	3	8.833E-03	1.09E+05	0.0177	4.55E+04	3.5492	803.6		1.32
	4	1.000E-03	2.65E+04	0.0243	2.85E+06	2.8539	5707.8		11.63
					Summations:	1.0427	8965.9	1.163E-04	
2	4	-1.000E-03	2.65E+04	0.0243	2.85E+06	-2.8539	5707.8		13.36
	5	-1.583E-03	4.20E+04	0.0219	2.57E+06	-6.4387	8134.8		8.44
	6	1.583E-03	4.20E+04	0.0219	2.57E+06	6.4387	8134.8		-8.44
	7	-3.333E-04	8.83E+03	0.0322	3.78E+06	-0.4201	2520.9		40.10
					Summations:	-3.2740	24498.2	-0.000134	

continued

12.12 (continued)

Trial 2

Circuit	Pipe	Q (m³/s)	N_R	*f*	k	h = kQ²	2kQ	ΔQ	% Chg
1	1	-5.949E-03	7.34E+04	0.0192	4.93E+04	-1.7451	586.67		0.92
	2	-4.033E-03	6.79E+04	0.0196	2.38E+05	-3.8736	1920.79		1.36
	3	8.717E-03	1.07E+05	0.0178	4.56E+04	3.4655	795.13		-0.63
	4	7.501E-04	1.99E+04	0.0260	3.06E+06	1.7210	4588.97		-7.30
					Summations:	-0.4322	7891.55	-5.477E-05	
2	4	-7.501E-04	1.988E+04	0.0260	3.06E+06	-1.7210	4588.97		-0.22
	5	-1.449E-03	3.841E+04	0.0223	2.62E+06	-5.5043	7595.56		-0.12
	6	1.717E-03	4.549E+04	0.0215	2.52E+06	7.4382	8665.94		0.10
	7	-1.997E-04	5.291E+03	0.0373	4.38E+06	-0.1747	1750.47		-0.84
					Summations:	0.0381	22600.94	1.684E-06	

Trial 3

Circuit	Pipe	Q (m³/s)	N_R	*f*	k	h = kQ²	2kQ	ΔQ	% Chg
1	1	-5.895E-03	7.27E+04	0.0193	4.94E+04	-1.7165	582.39		0.08
	2	-3.979E-03	6.70E+04	0.0197	2.39E+05	-3.7799	1900.15		0.11
	3	8.771E-03	1.08E+05	0.0178	4.56E+04	3.5048	799.13		-0.05
	4	8.065E-04	2.14E+04	0.0256	3.01E+06	1.9547	4847.36		-0.56
					Summations:	-0.0368	8129.03	-4.531E-06	
2	4	-8.065E-04	2.137E+04	0.0256	3.01E+06	-1.9547	4847.36		1.21
	5	-1.451E-03	3.845E+04	0.0223	2.62E+06	-5.5157	7602.41		0.67
	6	1.715E-03	4.545E+04	0.0215	2.52E+06	7.4252	8659.29		-0.57
	7	-2.013E-04	5.336E+03	0.0372	4.37E+06	-0.1773	1760.80		4.83
					Summations:	-0.2225	22869.86	-9.731E-06	

continued

12.12 (continued)

Trial 4

Circuit	Pipe	Q (m^3/s)	N_R	*f*	k	$h = kQ^2$	2kQ	ΔQ	% Chg
1	1	-5.890E-03	7.26E+04	0.0193	4.94E+04	-1.7141	582.04		0.10
	2	-3.974E-03	6.69E+04	0.0197	2.39E+05	-3.7722	1898.44		0.14
	3	8.776E-03	1.08E+05	0.0178	4.55E+04	3.5080	799.46		-0.06
	4	8.013E-04	2.12E+04	0.0256	3.01E+06	1.9327	4823.72		-0.70
					Summations:	-0.0456	8103.65	-5.625E-06	
2	4	-8.013E-04	2.124E+04	0.0256	3.01E+06	-1.9327	4823.72		0.25
	5	-1.441E-03	3.820E+04	0.0223	2.62E+06	-5.4502	7562.81		0.14
	6	1.725E-03	4.571E+04	0.0215	2.52E+06	7.5004	8697.68		-0.12
	7	-1.916E-04	5.078E+03	0.0378	4.44E+06	-0.1629	1700.83		1.04
					Summations:	-0.0454	22785.04	-1.992E-06	

Trial 5

Circuit	Pipe	Q (m^3/s)	N_R	*f*	k	$h = kQ^2$	2kQ	ΔQ	% Chg
1	1	-5.884E-03	7.26E+04	0.0193	4.94E+04	-1.7112	581.60		0.03
	2	-3.968E-03	6.68E+04	0.0197	2.39E+05	-3.7626	1896.31		0.04
	3	8.782E-03	1.08E+05	0.0178	4.55E+04	3.5121	799.87		-0.02
	4	8.050E-04	2.13E+04	0.0256	3.01E+06	1.9481	4840.24		-0.21
					Summations:	-0.0136	8118.03	-1.680E-06	
2	4	-8.050E-04	2.133E+04	0.0256	3.01E+06	-1.9481	4840.24		0.16
	5	-1.439E-03	3.814E+04	0.0223	2.62E+06	-5.4368	7554.70		0.09
	6	1.727E-03	4.576E+04	0.0214	2.52E+06	7.5158	8705.54		-0.07
	7	-1.896E-04	5.025E+03	0.0379	4.45E+06	-0.1601	1688.47		0.67
					Summations:	-0.0291	22788.95	-1.278E-06	

Final flows in L/min

Circuit	Pipe	Q
1	1	-353.1 L/min
	2	-238.1 L/min
	3	526.9 L/min
	4	48.3 L/min
2	4	-48.3 L/min
	5	-86.4 L/min
	6	103.6 L/min
	7	-11.4 L/min

CHAPTER THIRTEEN

PUMP SELECTION AND APPLICATION

13.1 to 13.14: Answers to questions in text.

13.15 **Affinity laws** relate the manner in which capacity, head and power vary with either speed or impeller diameter.

13.16 $Q_2 = Q_1 \dfrac{N_2}{N_1} = Q_1 \dfrac{0.5N_1}{N_1} = 0.5Q_1$: Capacity cut in half.

13.17 $h_{a_2} = h_{a_1}\left(\dfrac{N_2}{N_1}\right)^2 = h_{a_1}\left(\dfrac{0.5N_1}{N_1}\right)^2 = 0.25h_{a_1}$: h_a divided by 4.

13.18 $P_2 = P_1\left(\dfrac{N_2}{N_1}\right)^3 = P_1\left(\dfrac{0.5N_1}{N_1}\right)^3 = 0.125P_1$: P divided by 8.

13.19 $Q_2 = Q_1 \dfrac{D_2}{D_1} = Q_1 \dfrac{0.75D_1}{D_1} = 0.75Q_1$: 25% reduction.

13.20 $h_{a_2} = h_{a_1}\left(\dfrac{D_2}{D_1}\right)^2 = h_{a_1}\left(\dfrac{0.75D_1}{D_1}\right)^2 = 0.5625h_{a_1}$: 44% reduction.

13.21 $P_2 = P_1\left(\dfrac{D_2}{D_1}\right)^3 = P_1\left(\dfrac{0.75D_1}{D_1}\right)^3 = 0.422P_1$: 58% reduction.

13.22 $1\frac{1}{2} \times 3 - 6$

- 6 in casing-size of largest impeller
- 3 in nominal suction connection size
- $1\frac{1}{2}$ in nominal discharge connection size

13.23 $1\frac{1}{2} \times 3 - 10$

13.24 $1\frac{1}{2} \times 3 - 6$

13.25 $Q = 280$ gal/min; $P = 26$ hp; $e = 53\%$; $NPSH_R = 10.9$ ft

13.26 At $h_a = 250$ ft, $e_{max} = 56\%$: $Q = 220$ gal/min; $P = 24.0$ hp; $NPSH_R = 8.0$ ft

13.27 From Problem 13.26, $h_{a_1} = 250$ ft: Let $h_{a_2} = 1.15 h_{a_1} = 288$ ft
Then $Q_2 = 125$ gal/min; $P_2 = 19$ hp; $e_2 = 45\%$; $NPSH_R = 5.5$ ft (approximate values)

13.28

	6 in	7 in	8 in	9 in	10 in
h_a	120 ft	190 ft	250 ft	320 ft	390 ft
Q	145 gal/min	187 gal/min	220 gal/min	260 gal/min	290 gal/min
e_{max}	51%	54%	56%	57.3%	58%(Est)

13.29 $NPSH_R$ increases.

13.30 Throttling valves dissipate energy from fluid that was delivered by pump. When a lower speed is used to obtain a lower capacity, power required to drive pump decreases as the cube of the speed. Variable speed control is often more precise and it can be automatically controlled.

13.31 As fluid viscosity increases, capacity and efficiency decrease, power required increases.

13.32 Total capacity doubles.

13.33 The same capacity is delivered but the head capability increases to the sum of the ratings of the two pumps.

13.34 a. Rotary or 3500 rpm centrifugal
b. Rotary
c. Rotary
d. Reciprocating
e. Rotary or high speed centrifugal
f. 1750 rpm centrifugal
g. 1750 rpm centrifugal or mixed flow
h. Axial flow

13.35 $Q = 390$ gal/min; $H = 550$ ft; $D = 12$ in; $N = 3560$ rpm

$$N_s = \frac{N\sqrt{Q}}{H^{3/4}} = \frac{3560\sqrt{390}}{(550)^{0.75}} = \mathbf{619};\ D_s = \frac{DH^{1/4}}{\sqrt{Q}} = \frac{(12)(550)^{0.25}}{\sqrt{390}} = \mathbf{2.94}$$

Point in Fig. 13.48 lies in **radial flow** centrifugal region.

13.36 $Q = 2750$ gal/min; $H = 200$ ft; $D = 15$ in; $N = 1780$ rpm

$$N_s = \frac{N\sqrt{Q}}{H^{3/4}} = \frac{1780\sqrt{2750}}{(200)^{0.75}} = \mathbf{1755};\ D_s = \frac{DH^{1/4}}{\sqrt{Q}} = \frac{15(200)^{0.25}}{\sqrt{2750}} = \mathbf{1.08}$$

Point in Figure 13.34 lies in **radial flow** centrifugal region.

13.37 $$N_s = \frac{N\sqrt{Q}}{H^{3/4}}:\ N = \frac{N_s H^{3/4}}{\sqrt{Q}} = \frac{(5000)(40)^{0.75}}{\sqrt{10000}} = \mathbf{795\ rpm}$$

13.38 $N_s = \frac{N\sqrt{Q}}{H^{3/4}} = \frac{(1750)\sqrt{5000}}{(100)^{0.75}} = \mathbf{3913}$

13.39 $N_s = \frac{N\sqrt{Q}}{H^{3/4}} = \frac{(1750)\sqrt{12000}}{(300)^{0.75}} = \mathbf{2659}$

13.40 $N_s = \frac{N\sqrt{Q}}{H^{3/4}} = \frac{(1750)\sqrt{500}}{(100)^{0.75}} = \mathbf{1237}$

13.41 $N_s = \frac{N\sqrt{Q}}{H^{3/4}} = \frac{(3500)\sqrt{500}}{(100)^{0.75}} = \mathbf{2475}$; Twice N_s from 13.40.

13.42 Same method as Problems 13.38 to 13.41.

a.	$N_s = 1463$ radial	b.	$N_s = 260$ too low
c.	$N_s = 3870$ radial or mixed	d.	$N_s = 18.5$ too low
e.	$N_s = 104$ too low	f.	$N_s = 2943$ radial
g.	$N_s = 7260$ mixed	h.	$N_s = 24277$ axial

13.43 to 13.46 See text.

13.47 At inlet to pump. Pressure at this point and fluid properties affect pump operation, particularly the onset of cavitation. Pump manufacturer's $NPSH_R$ rating related to pump inlet.

13.48 Elevating reservoir raises pressure at pump inlet and increases $NPSH_a$.

13.49 Large pipe sizes reduce flow velocity and reduce energy losses, thus increasing $NPSH_a$.

13.50 Air pockets will not form in an eccentric reducer as they will in a concentric reducer.

13.51 $(NPSH_R)_2 = (NPSH_R)_1\left(\frac{N_2}{N_1}\right)^2 = 7.50\text{ ft}\left(\frac{2850}{3500}\right)^2 = \mathbf{4.97\ ft}$

13.52 $NPSH_a = h_{sp} - h_s - h_f - h_{vp}$: Some data from Prob. 7.14.

a. $h_{sp} = \frac{p_{atm}}{\gamma} = \frac{14.4\text{lb}}{\text{in}^2}\frac{\text{ft}^3}{62.2\text{lb}}\frac{144\text{in}^2}{\text{ft}^2} = 33.34\text{ ft}$

$h_s = 10.0$ ft; $h_f = 6.0$ ft;

$h_{vp} = 1.17$ (Table 13.2)

$NPSH_a = 33.34 - 10 - 6 - 1.17 = \mathbf{16.17\ ft}$

b. Water at 180°F, $h_{vp} = 17.55$ ft;

$\gamma = 60.6$ lb/ft^3

$h_{sp} = (14.4)(144)/(60.6) = 34.22$ ft

$NPSH_a$ 34.22 – 10 – 6 – 17.55 = 0.67 ft

Cavitation will likely occur!

13.53 $NPSH_a = h_{sp} - h_s - h_f - h_{vp} = 34.48 - 4.8 - 2.2 - 6.78 = \mathbf{20.70\ ft}$

$h_{sp} = \frac{14.7\text{ lb}}{\text{in}^2}\times\frac{\text{ft}^3}{61.4\text{ lb}}\times\frac{144\text{ in}^2}{\text{ft}^2} = \frac{p_{atm}}{\gamma} = 34.48\text{ ft}$

$h_s = 4.8$ ft; $h_f = 2.2$ ft; $h_{vp} = 6.78$ ft (Table 13.2) Water at 140°F

13.54 $NPSH_a = h_{sp} + h_s - h_f - h_{vp} = 11.47 + 2.6 - 0.80 - 1.55 = \mathbf{11.72\ m}$

$$h_{sp} = \frac{p_{\text{atm}}}{\gamma} = \frac{98.5\ \text{kN}}{\text{m}^2}\frac{\text{m}^3}{8.59\ \text{kN}} = 11.47\ \text{m};\ h_s = 2.6\ \text{m};\ h_f = 0.80\ \text{m}$$

$$h_{vp} = \frac{p_{vp}}{\gamma} = \frac{13.3\ \text{kN}}{\text{m}^2}\frac{\text{m}^3}{8.59\ \text{kN}} = 1.55\ \text{m}$$

13.55 $NPSH_a = h_{sp} - h_s - h_f - h_{vp}$

$$h_{sp} = \frac{p_{\text{atm}}}{\gamma} = \frac{101.8\ \text{kN}}{\text{m}^2}\frac{\text{m}^2}{9.53\ \text{kN}} = \mathbf{10.68\ m};\ \boldsymbol{h_s} = \mathbf{2.0\ m};\ \boldsymbol{h_{vp}} = \mathbf{4.8\ m}$$

$$h_f = f_3\left(\frac{L}{D}\right)_3\frac{\upsilon_3^2}{2g} + K_1\frac{\upsilon_3^2}{2g} + f_{3T}(20)\frac{\upsilon_3^2}{2g} + f_2\left(\frac{L}{D}\right)_2\frac{\upsilon_2^2}{2g}$$

NOTE: $f_{3T} = 0.018$

Friction 3 in Foot valve Elbow Friction 2 in $K_1 = 75f_{3T} = 75(0.018) = 1.35$

$$\upsilon_3 = \frac{Q}{A_3} = \frac{300\ \text{L/min}}{4.768\times10^{-3}\ \text{m}^2}\frac{1\ \text{m}^3/\text{s}}{60000\ \text{L/min}} = \frac{1.05\ \text{m}}{s};\ \frac{\upsilon_3^2}{2g} = \frac{(1.05)^2}{2(9.81)} = 0.0560\ \text{m}$$

$$N_{R_3} = \frac{\upsilon_3 D_3}{\nu} = \frac{(1.05)(0.0779)}{3.60\times10^{-7}} = 2.3\times10^5;\ \frac{D_3}{\varepsilon} = \frac{0.0779}{4.6\times10^{-5}}1 = 1694;\ f_3 = 0.0195$$

$$\upsilon_2 = \frac{Q}{A_2} = \frac{300/60000}{2.168\times10^{-3}} = \frac{2.31\,m}{s};\ \frac{\upsilon_2^2}{2g} = \frac{(2.31)^2}{2(9.81)} = 0.271\ \text{m}$$

$$N_{R_2} = \frac{\upsilon_2 D_2}{\nu} = \frac{(2.31)(0.0525)}{3.60\times10^{-7}} = 3.4\times10^5;\ \frac{D_2}{\varepsilon} = 1141;\ f_2 = 0.0202$$

$$h_f = (0.0195)\frac{2.0\ \text{m}}{0.0779\ \text{m}}(0.056\ \text{m}) + 1.35(0.056) + (0.018)(20)(0.056) + (0.0202)\frac{1.5}{0.0525}(0.271)$$

$h_f = 0.280$ m

$NPSH_a = 10.68 - 2.0 - 0.280 - 4.97 = \mathbf{3.43\ m}$

For all problems 13.56 – 13.65: $NPSH_a = h_{sp} \pm h_s - h_f - h_{vp}$
See Section 13.11, Equation 13-14. See Figure 13.37 for vapor pressure head h_{vp}.

13.56 Find $NPSH_a$: Carbon tetrachloride at 150°F; sg = 1.48; p_{atm} = 14.55 psia; $h_s = -3.6$ ft; $h_f = 1.84$ ft
$h_{vp} = 16.3$ ft
Open tank: $h_{sp} = p_{sp}/\gamma = p_{atm}/\gamma = (14.55\ \text{lb/in}^2)(144\ \text{in}^2/\text{ft}^2)/[1.48(62.4\ \text{lb/ft}^3)] = 22.69$ ft
$NPSH_a = 22.69 - 3.6 - 1.84 - 16.3 =$ **0.95 ft (Low)**

13.57 Find $NPSH_a$: Carbon tetrachloride at 65°C; sg = 1.48; p_{atm} = 100.2 kPa; $h_s = -1.2$ m; $h_f = 0.72$ m
$h_{vp} = 4.8$ m
Open tank: $h_{sp} = p_{sp}/\gamma = p_{atm}/\gamma = (100.2\ \text{kN/m}^2)/[1.48(9.81\ \text{kN/m}^3)] = 6.90$ m
$NPSH_a = 6.90 - 1.2 - 0.72 - 4.8 =$ **0.18 m (Very low)**

13.58 Find $NPSH_a$: Gasoline at 40°C; sg = 0.65; p_{atm} = 99.2 kPa; h_s = –2.7 m; h_f = 1.18 m
h_{vp} = 14.0 m
Open tank: $h_{sp} = p_{sp}/\gamma = p_{atm}/\gamma$ = (99.2 kN/m²)/[0.65(9.81 kN/m³)] = 15.55 m
$NPSH_a$ = 15.55 – 2.7 – 1.18 – 14.0 = **–2.33 m (Cavitation expected)**

13.59 Find $NPSH_a$: Gasoline at 110°F; sg = 0.65; p_{atm} = 14.28 psia; h_s = +4.8 ft; h_f = 0.87 ft
h_{vp} = 51.0 ft
Open tank: $h_{sp} = p_{sp}/\gamma = p_{atm}/\gamma$ = (14.28 lb/in²)(144 in²/ft²)/[0.65(62.4 lb/ft³)] = 50.70 ft
$NPSH_a$ = 50.70 + 4.8 – 0.87 – 51.0 = **3.63 ft**

13.60 Find $NPSH_a$: Carbon tetrachloride at 150°F; sg = 1.48; p_{atm} = 14.55 psia; h_s = +3.66 ft; h_f = 1.84 ft
h_{vp} = 16.3 ft
Open tank: $h_{sp} = p_{sp}/\gamma = p_{atm}/\gamma$ = (14.55 lb/in²)(144 in²/ft²)/[1.48(62.4 lb/ft²)] = 22.69 ft
$NPSH_a$ = 22.69 + 3.67 – 1.84 – 16.3 = **8.22 ft**

13.61 Find $NPSH_a$: Gasoline at 110°F; sg = 0.65; p_{atm} = 14.28 psia; h_s = –2.25 ft; h_f = 0.87 ft
h_{vp} = 51.0 ft
Open tank: $h_{sp} = p_{sp}/\gamma = p_{atm}/\gamma$ = (14.28 lb/in²)(144 in²/ft²)/[0.65(62.4 lb/ft³)] = 50.70 ft
$NPSH_a$ = 50.70 – 2.25 – 0.87 – 51.0 = **–3.42 ft (Cavitation expected)**

13.62 Find $NPSH_a$: Carbon tetrachloride at 65°C; sg = 1.48; p_{atm} = 100.2 kPa; h_s = +1.2 m; h_f = 0.72 m
h_{vp} = 4.8 m
Open tank: $h_{sp} = p_{sp}/\gamma = p_{atm}/\gamma$ = (100.2 kN/m²)/[1.48(9.81 kN/m³)] = 6.90 m
$NPSH_a$ = 6.90 + 1.2 – 0.72 – 4.8 = **2.58 m**

13.63 Find $NPSH_a$: Gasoline at 40°C; sg = 0.65; p_{atm} = 99.2 kPa; h_s = +0.65 m; h_f = 1.18 m
h_{vp} = 14.0 m
Open tank: $h_{sp} = p_{sp}/\gamma = p_{atm}/\gamma$ = (99.2 kN/m²)/[0.65(9.81 kN/m³)] = 15.55 m
$NPSH_a$ = 15.55 + 0.65 – 1.18 – 14.0 = **1.02 m**

13.64 Find required pressure above the fluid in a closed, pressurized tank so that $NPSH_a \geq$ 4.0 ft.
Propane at 110°F; sg = 0.48; p_{atm} = 14.32 psia; h_s = +2.50 ft; h_f = 0.73 ft
h_{vp} = 1080 ft
Solve Eq. 13-14 for required $h_{sp} = NPSH_a - h_s + h_f + h_{vp}$ = 4.0 – 2.5 + 0.73 + 1080 = 1082.2 ft
$P_{sp} = \gamma h_{sp}$ = (0.48)(62.4 lb/ft³)(1082.2 ft)(1 ft²/144 in²) = 225.1 lb/in² = 225.1 psia
Gage pressure: $p_{tank} = p_{sp} - p_{atm}$ = 225.1 psia – 14.32 psia = **210.8 psig**

13.65 Find required pressure above the fluid in a closed, pressurized tank so that $NPSH_a \geq$ 150.0 m.
Propane at 45°C; sg = 0.48; p_{atm} = 9.47 kPa absolute; h_s = –1.84 m; h_f = 0.92 m
h_{vp} = 340 m
Solve Eq. 13-14 for required $h_{sp} = NPSH_a - h_s + h_f + h_{vp}$ = 1.50 + 1.84 + 0.92 + 340 = 344.3 m
$P_{sp} = \gamma h_{sp}$ = (0.48)(9.81 kN/m³)(344.3 m) = 1621 kN/m² = 1621 kPa absolute
Gage pressure: $p_{tank} = p_{sp} - p_{atm}$ = 1621 kPa – 98.4 kPa = **1523 kPa gage**

CHAPTER FOURTEEN

OPEN CHANNEL FLOW

14.1 $R = \frac{A}{WP} = \frac{\pi D^2}{8} \times \frac{2}{\pi D} = \frac{D}{4} = \frac{300\ \text{mm}}{4} = \mathbf{75\ mm}$

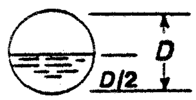

14.2 $R = \frac{A}{WP} = \frac{Wd}{W + 2d} = \frac{(2.75\ \text{m})(0.05\ \text{m})}{[2.75 + 2(0.50)]\text{m}} = \mathbf{0.367\ m}$

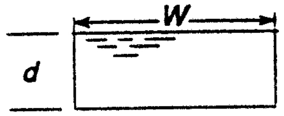

14.3 $d = 1.50$ ft; $W = 3.50$ ft, $x = d \tan 30° = 0.866$ ft
$L = d/\cos 30° = 1.732$ ft

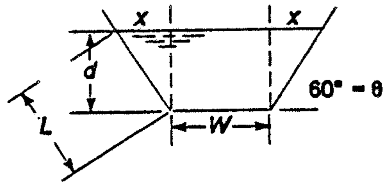

$$A = Wd + 2\left[\frac{1}{2}xd\right] = (3.50)(1.50) + (\overset{x}{0.866})(\overset{d}{1.50}) = 6.549\ \text{ft}^2$$

$WP = W + 2L = 3.50 + 2(1.732) = 6.964$ ft
$R = A/WP = 6.549\ \text{ft}^2/6.964\ \text{ft} = \mathbf{0.940\ ft}$

14.4 Data from Prob. 14.3, but $\theta = 45°$. $x = d \tan 45° = d = 1.50$ ft
$L = d/\cos 45° = 1.50/\cos 45° = 2.121$ ft
$A = (3.50)(1.50) + (1.50)(1.50) = 7.50\ \text{ft}^2$
$WP = 3.50 + 2(2.121) = 7.743$ ft
$R = A/WP = 7.50\ \text{ft}^2/7.743\ \text{ft} = \mathbf{0.969\ ft}$

14.5 $W = 150$ mm; $d = 62$ mm; $X = 1.5d = 1.5(62) = 93$ mm
$L = \sqrt{X^2 + d^2} = 111.8\ \text{mm}^2$

$$R = \frac{A}{WP} = \frac{Wd + Xd}{W + 2L} = \frac{(150)(62) + (93)(62)}{150 + 2(111.8)} = \frac{15066\ \text{mm}^2}{373.5\ \text{mm}} = \mathbf{40.3\ mm}$$

14.6 $d = d_1 = 2.0$ in; $L = \sqrt{2^2 + 2^2} = 2.828$ in
$A = (4)(2) + \frac{1}{2}(2)(2) = 10\ \text{in}^2$
$WP = 4 + 2 + 2.828 = 8.828$ in
$R = A/WP = \mathbf{1.133\ in}$

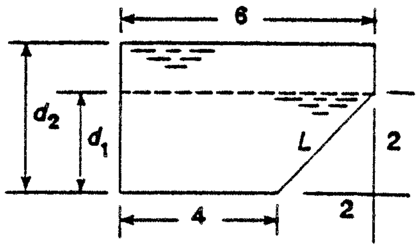

14.7 Data from Prob. 14.6. $d = d_2 = 3.50$ in
$A = (4)(2) + \frac{1}{2}(2)(2) + (6)(3.50 - 2.00) = 19.0\ \text{in}^2$
$WP = 3.50 + 4 + 2.828 + 1.50 = 11.828$ in
$R = A/WP = 19.0\ \text{in}^2/11.828\ \text{in} = \mathbf{1.606\ in}$

14.8 $A = (1.0)(0.5) = 0.50\ \text{m}^2$; $WP = 1.0 + 2(0.5) + 2.0$ m
$R = A/WP = 0.50/2.0 =$ **0.25 m**

14.9 $A = (1.0)(2.50) + 2\left[\frac{1}{2}(1.9)(3.8)\right]$
$= 9.72\ \text{m}^2$
$WP = 2(4.249) + 2(0.60) + 1.0$
$= 10.697$ m
$R = A/WP =$ **0.909 m**

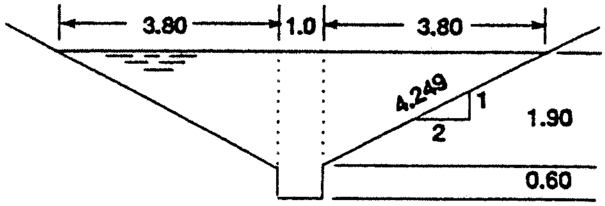

14.10 $A = (3.50)(2.0) = 7.00\ \text{m}^2$; $WP = 3.50 + 2(2.0) = 7.50$ m
$R = A/WP = 0.933$ m; $n = 0.017$

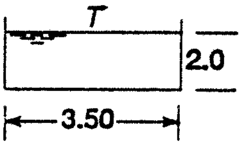

$$\upsilon = \frac{1.00}{n}R^{2/3}S^{1/2} = \frac{1.00}{0.017}(0.933)^{2/3}(0.001)^{1/2} = 1.777\ \text{m/s}$$
$Q = A\upsilon = (7.00\ \text{m}^2)(1.777\ \text{m/s}) =$ **12.44 m³/s**
$y_h = A/T = 7.00\ \text{m}^2/3.50\ \text{m} = 2.00$ m
$$N_F = \upsilon/\sqrt{gy_h} = \frac{1.777\ \text{m/s}}{\sqrt{(9.81\ \text{m/s}^2)(2.00\ \text{m})}} = \mathbf{0.401}$$

14.11 See Prob. 14.7. $d_2 = 3.50$ in; $A = 19.0\ \text{in}^2$; $WP = 11.828$ in; $R = 1.606$ in
$A = 19.0\ \text{in}^2(1\ \text{ft}^2/144\ \text{in}^2) = 0.132\ \text{ft}^2$
$$WP = 11.828\ \text{in} \times \frac{1\ \text{ft}}{12\ \text{in}} = 0.986\ \text{ft}$$
$$R = 1.606\ \text{in} \times \frac{1\ \text{ft}}{12\ \text{in}} = 0.134\ \text{ft}$$
$$S = \frac{h}{L} = \frac{4.0\ \text{in}}{60\ \text{ft}} \times \frac{\text{ft}}{12\ \text{in}} = 0.00556;\ n = 0.013\ \text{given}$$
$$Q = \frac{1.49}{n}AR^{2/3}S^{1/2} = \frac{1.49}{0.013}(0.132)(0.134)^{2/3}(0.00556)^{1/2} = \mathbf{0.295\ ft^3/s}$$

14.12 $S = 1\ \text{ft}/500\ \text{ft} = 0.002$; $n = 0.024$; $A = \frac{\pi D^2}{8} = \frac{\pi(6)^2}{8} = 14.14\ \text{ft}^2$
$WP = \pi D/2 = \pi(6)/2 = 9.425$ ft; $R = A/WP = 1.50$ ft
$$Q = \frac{1.49}{n}AR^{2/3}S^{1/2} = \frac{1.49}{0.024}(14.14)(1.50)^{2/3}(0.002)^{1/2} = \mathbf{51.4\ ft^3/s}$$

14.13 $A = (0.205)(0.250) = 0.05125\ \text{m}^2$; $WP = 0.205 + 2(0.250) = 0.705$ m
$R = A/WP = 0.0727$ m; $n = 0.012$; $Q = \frac{1.00}{n}\,1\,AR^{2/3}S^{1/2}$
$$S = \left[\frac{nQ}{AR^{2/3}}\right]^2 = \left[\frac{(0.012)(0.0833)}{(0.05125)(0.0727)^{2/3}}\right]^2 = \mathbf{0.0125}$$
$$\text{where } Q = 5000\ \text{L/min} \times \frac{1\ \text{m}^3/\text{s}}{60000\ \text{L/min}} = \mathbf{0.0833\ m^3/s}$$

14.14 See Prob. 14.8 for $d = 0.50$ m; Prob. 14.9 for $d = 2.50$ m

$S = 0.50\% = 0.005$, $n = 0.017$

a. $d = 0.50$ m; $A = 0.50\ \text{m}^2$; $R = 0.25$ m

$$Q = \frac{1.00}{n} AR^{2/3}S^{1/2} = \frac{1.00}{0.017}(0.50)(0.25)^{2/3}(0.005)^{1/2} = \mathbf{0.825\ m^3/s}$$

b. $d = 2.50$ m; $A = 9.72\ \text{m}^2$; $R = 0.909$ m

$$Q = \frac{1.00}{0.017}(9.72)(0.909)^{2/3}(0.005)^{1/2} = \mathbf{37.9\ m^3/s}$$

14.15 a. **Depth = 3.0 ft:**

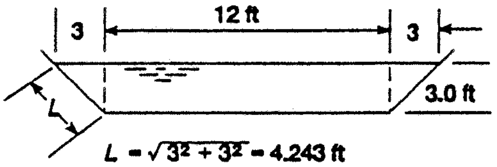

$$A = (3)(12) + 2\left[\frac{1}{2}(3)(3)\right] = 45\ \text{ft}^2$$

$WP = 12 + 2(4.243) = 20.485$ ft

$R = A/WP = 45/20.485 = 2.197$ ft

$$Q = \frac{1.49}{0.04}(45)(2.197)^{2/3}(0.00015)^{1/2} = \mathbf{34.7\ ft^3/s}$$

b. **Depth = 6.0 ft:**

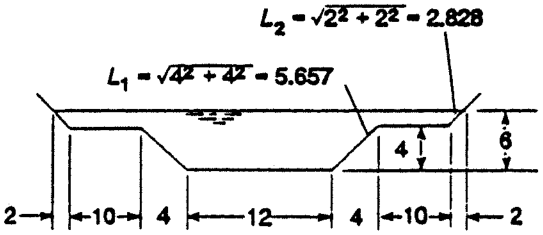

$$A = (4)(12) + 2\left[\frac{1}{2}(4)(4)\right] + (2)(40) + 2\left[\frac{1}{2}(2)(2)\right]$$

$A = 148\ \text{ft}^2$

$WP = 2(2.828) + 2(10) + 2(5.657) + 12 = 48.97$ ft

$R = A/WP = 148/48.97 = 3.022$ ft

$$Q = \frac{1.49}{0.04}(148)(3.022)^{2/3}(0.00015)^{1/2} = \mathbf{141.1\ ft^3/s}$$

14.16 $$AR^{2/3} = \frac{nQ}{1.49S^{1/2}} = \frac{(0.015)(150)}{(1.49)(0.001)^{1/2}} = 47.75$$

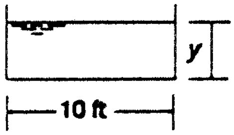

$$A = 10y;\ WP = 10 + 2y;\ R = \frac{A}{WP} = \frac{10y}{10+2y}$$

$$AR^{2/3} = 10y\left[\frac{10y}{10+2y}\right]^{2/3}$$ Find y such that $AR^{2/3} = 47.75$

By trial and error, $\mathbf{y = 3.10\ ft}$;

$$AR^{2/3} = 10(3.1)\left[\frac{10(3.1)}{10+2(3.1)}\right]^{2/3} = 47.78$$

14.17 $AR^{2/3} = \dfrac{nQ}{1.00S^{1/2}} = \dfrac{(0.017)(15)}{(0.001)^{1/2}} = 8.064$

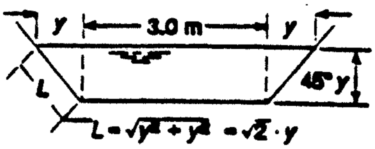

$A = 3.0(y) + 2\left[\dfrac{1}{2}(y)(y)\right] = 3y + y^2$

$WP = 3.0 + 2L = 3.0 + 2\sqrt{2}y$

$AR^{2/3} = (3y + y^2)\left[\dfrac{3y + y^2}{3 + 2.828y}\right]^{2/3}$: By trial,

for y = **1.69 m**, $AR^{2/3} = 8.02$

14.18 $S = 0.075/50 = 0.0015$

$AR^{2/3} = \dfrac{nQ}{1.00S^{1/2}} = \dfrac{(0.013)(2.0)}{(0.0015)^{1/2}} = 0.671$

$A = 0.4W$; $WP = W + 0.8$

$R = \dfrac{A}{WP} = \dfrac{0.4W}{W + 0.8}$: Then $AR^{2/3} = 0.4W\left[\dfrac{0.4W}{W + 0.8}\right]^{2/3}$: By trial, W = **3.55 m**

14.19 For $y = 1.50$ m, $X = 2.25$ m

$L = 1.803(1.5) = 2.704$ m

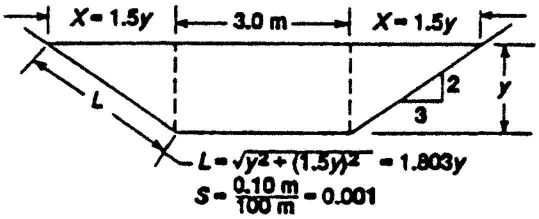

$A = (3)(1.5) + 2\left[\dfrac{1}{2}(1.5)(2.25)\right] = 7.875 \text{ m}^2$

$WP = 3.0 + 2(2.704) = 8.408$ m

$R = A/WP = 7.875/8.408 = 0.937$ m

$Q = \dfrac{1.00}{0.015}(7.875)(0.937)^{2/3}(0.001)^{1/2}$ = **15.89 m³/s**

$\upsilon = \dfrac{Q}{A} = \dfrac{15.89 \text{ m}^3/\text{s}}{7.875 \text{ m}^2} = 2.018$ m/s; Top width $= T = 3.0 + 2X = 7.50$ m

Hydraulic Depth $= y_h = \dfrac{A}{T} = \dfrac{7.875 \text{ m}^2}{7.50 \text{ m}} = 1.05$ m

Froude No. $= N_F = \dfrac{\upsilon}{\sqrt{gy_h}} = \dfrac{2.018}{\sqrt{(9.81)(1.05)}}$ = **0.629**

Find critical depth for $Q = 15.89$ m³/s: Let $N_F = 1.0 = \dfrac{Q/A}{\sqrt{gy_h}}$ (1)

$A = 3y + Xy = 3y + (1.5y)(y) = 3y + 1.5y^2$

$T = 3 + 2X = 3 + 2(1.5)y = 3 + 3y$

From Eq.(1), $\dfrac{Q}{A} = \dfrac{\sqrt{gA}}{T}$ or $\dfrac{Q^2}{A^2} = \dfrac{gA}{T}$ or $\dfrac{T}{A^3} = \dfrac{g}{Q^2} = \dfrac{9.81}{(15.89)^2} = 0.0388$

But $\dfrac{T}{A^3} = \dfrac{3 + 3y}{\left[3y + 1.5y^2\right]^3}$: Find y such that $\dfrac{T}{A^3} = 0.0388$

By trial, y = **1.16 m** $= y_c$ = Critical depth

14.20 Each trough:

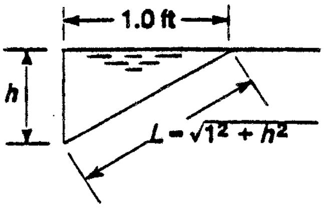

$$Q = 250\text{ gal/min}\ \frac{1\text{ ft}^3/\text{s}}{449\text{ gal/min}} = 0.557\text{ ft}^3/\text{s}$$

$$AR^{2/3} = \frac{nQ}{1.49S^{1/2}} = \frac{(0.017)(0.557)}{(1.49)(0.01)^{1/2}} = 0.0635$$

$$A = (1.0)(h)\frac{1}{2} = h/2$$

$$WP = h + L = h + \sqrt{1+h^2}$$

$$R = \frac{A}{WP} = \frac{h/2}{h+\sqrt{1+h^2}}$$

$$AR^{2/3} = \frac{h}{2}\left[\frac{h/2}{h+\sqrt{1+h^2}}\right]^{2/3}$$

Find h such that $AR^{2/3} = 0.0635$

By trial, ***h* = 0.458 ft**

14.21 $Q = 500\text{ gal/min} \times \dfrac{1\text{ ft}^3/\text{s}}{449\text{ gal/min}} = 1.114\text{ ft}^3/\text{s}$

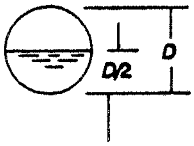

$$AR^{2/3} = \frac{nQ}{1.49S^{1/2}} = \frac{(0.013)(1.114)}{(1.49)(0.001)^{1/2}} = 0.307$$

$$A = \pi D^2/8;\ WP = \pi D/2;\ R = \frac{A}{WP} = \frac{\pi D^2}{8}\frac{2}{\pi D} = \frac{D}{4}$$

$$AR^{2/3} = \frac{\pi D^2}{8}\left[\frac{D}{4}\right]^{2/3} = \frac{\pi D^2(D)^{2/3}}{8(4)^{2/3}} = \frac{\pi(D)^{8/3}}{8(2.52)} = 0.156(D)^{8/3} = 0.307$$

$$\text{Then } D = \left[\frac{0.307}{0.156}\right]^{3/8} = \mathbf{1.29\ ft}$$

14.22 $A = 1.00(y);\ WP = 1.00 + 2y;\ R = \dfrac{y}{1+2y}$

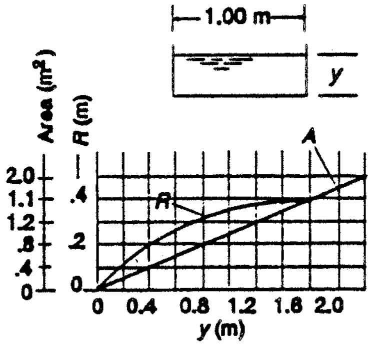

y(m)	A(m^2)	R(m)	y	A	R
0.10	0.10	0.0833	0.80	0.80	0.3077
0.20	0.20	0.1429	1.00	1.00	0.3333
0.30	0.30	0.1875	1.50	1.50	0.3750
0.40	0.40	0.2222	2.00	2.00	0.4000
0.50	0.50	0.250			
0.60	0.60	0.2727			

14.23 $Q = Av = (0.80\text{ m})(y)(v)$

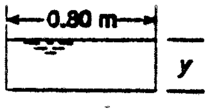

$$y = \frac{Q}{0.8v} = \frac{2.00\text{ m}^3/\text{s}}{(0.80\text{ m})(3.0\text{ m/s})} = \mathbf{0.833\text{ m}}$$

$WP = 0.8 + 2y = 0.8 + 2(0.833) = 2.467$ m; $A = 0.8(y) = 0.8(0.833) = 0.666\text{ m}^2$

$$R = \frac{A}{WP} = \frac{0.666\text{ m}^2}{2.467\text{ m}} = \mathbf{0.270\text{ m}}$$

14.24 $$Q = \frac{1.00}{n} AR^{2/3}S^{1/2};\ S = \left[\frac{nQ}{AR^{2/3}}\right]^2 = \left[\frac{(0.015)(2.00)}{(0.666)(0.270)^{2/3}}\right]^2 = \mathbf{0.0116\text{ m}^3}$$

Data from Problem 14.23.

14.25 and 14.26

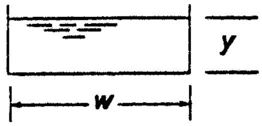

$$Q = Av = Wyv;\ y = \frac{Q}{Wv} = \frac{2.00}{W(3.0)}$$

$$WP = W + 2y;\ R = \frac{A}{WP}$$

$$S = \left[\frac{nQ}{AR^{2/3}}\right]^2 = \left[\frac{(0.015)(2.00)}{AR^{2/3}}\right]^2$$

W(m)	$y = 2/3W$	$WP = W + 2y$	$A = Wy$	$R = A/WP$	S
0.50	1.333 m	3.167 m	0.667 m^2	0.2105 m	0.0162
0.75	0.889	2.528	0.667	0.2637	0.0120
1.00	0.667	2.333	0.667	0.2857	0.0108
1.25	0.533	2.317	0.667	0.2878	0.0107
1.50	0.444	2.389	0.667	0.2791	0.0111
1.75	0.381	2.512	0.667	0.2654	0.0119
2.00	0.333	2.667	0.667	0.2500	0.0129

Prob. 14.25 (y and R columns)   Prob. 14.26 (S column)

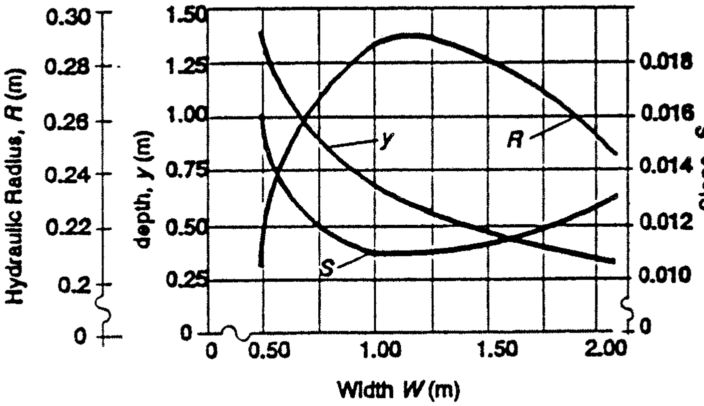

14.27 From Table 14.2:

$A = (b + zy)(y) = [2.00 + 1.5(1.667)](1.667)$
$= \mathbf{7.50\ ft^2}$

$WP = b + 2y\sqrt{1+z^2}$

$= 2.0 + 2(1.667)\sqrt{1+1.5^2} = 8.009$ ft

$R = A/WP = 7.50/8.009 = \mathbf{0.936\ ft}$

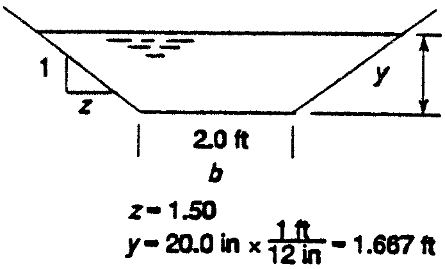

14.28 **Data from Prob. 14.27** $n = 0.017$ – formed unfinished concrete.

$$Q = \frac{1.49}{n} AR^{2/3}S^{1/2} = \frac{1.49}{0.017}(7.5)(0.936)^{2/3}(0.005)^{1/2} = \mathbf{44.49\ ft^3/s}$$

14.29 Same as 14.28 except $n = 0.010$ – plastic:

$$Q = \frac{1.49}{0.010}(7.5)(0.936)^{2/3}(0.005)^{1/2} = \mathbf{75.63\ ft^3/s}$$

14.30 and 14.31

$b = 2.00$ ft; $z = 1.50$; $S = 0.005$; $n = 0.017$

$A = (b + zy)y$; $WP = b + 2y\sqrt{1+z^2}$; $R = A/WP$; $Q = \frac{1.49}{n} AR^{2/3}S^{1/2}$

y(in)	y(ft)	A(ft^2)	WP(ft)	R(ft)	Q(ft^3/s)
6.00	0.500	1.375	3.803	0.3616	4.325
10.00	0.833	2.708	5.005	0.5412	11.147
14.00	1.167	4.375	6.206	0.7049	21.476
18.00	1.500	6.375	7.408	0.8605	35.745
22.00	1.833	8.708	8.610	1.0114	54.380
24.00	2.000	10.000	9.211	1.0856	65.466

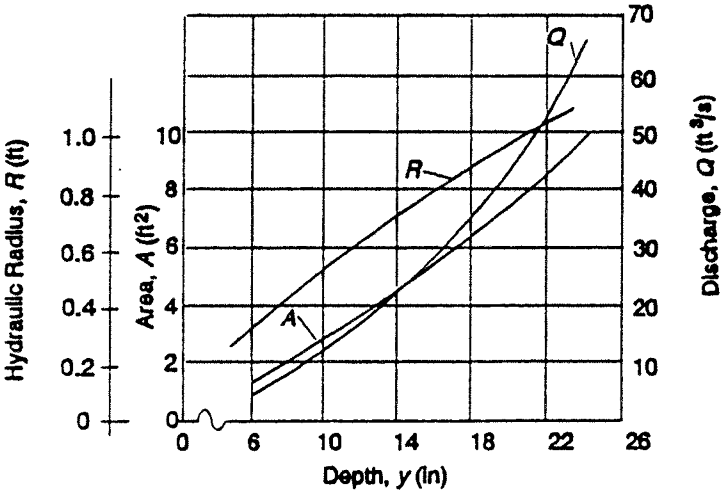

14.32 $D = 0.375$ m; $y = 0.225$ m $> D/2 \rightarrow$ See Table 14.2.

$\theta = \pi + 2\sin^{-1}[(2y/D) - 1] = 3.544$ rad

$$A = \frac{(\theta - \sin\theta)D^2}{8} = \frac{(3.544 - \sin 3.544)(0.375)^2\ \text{m}^2}{8} = \mathbf{0.06919\ m^2}$$

$WP = \theta D/2 = (3.544)(0.375\text{ m})/2 = 0.665$ m

$$R = \left[\frac{\theta - \sin\theta}{\theta}\right]\frac{D}{4} = \left[\frac{3.544 - \sin 3.544}{3.544}\right]\frac{0.375\text{ m}}{4} = \mathbf{0.104\ m}$$

14.33 $D = 0.375$ m; $y = .135$ m $< D/2 \rightarrow$ See Table 14.2.

$$\theta = \pi - 2\sin^{-1}[1 - 2y/D] = \pi - 2\sin^{-1}\left[1 - \frac{2(0.135)}{0.375}\right] = 2.574 \text{ rad}$$

$$A = \frac{(\theta - \sin\theta)D^2}{8} = \frac{(2.574 - \sin 2.574)(0.375)^2}{8} = \mathbf{0.0358\ m^2}$$

$WP = \theta D/2 = (2.574)(0.375\text{ m})/2 = 0.482$ m

$$R = \left[\frac{\theta - \sin\theta}{\theta}\right]\frac{D}{4} = \left[\frac{2.574 - \sin 2.574}{2.574}\right]\frac{0.375\text{ m}}{4} = \mathbf{0.0742\ m}$$

14.34 $S = 0.0012$; $n = 0.013$; Data from Prob. 14.32:

$$Q = \frac{1.00}{0.013}AR^{2/3}A^{1/2} = \frac{1.00}{0.013}(0.06919)(0.104)^{2/3}(0.0012)^{1/2} = \mathbf{4.08 \times 10^{-2}\ m^3/s}$$

14.35 $S = 0.0012$; $n = 0.013$; Data from Prob. 14.33:

$$Q = \frac{1.00}{0.013}AR^{2/3}S^{1/2} = \frac{1.00}{0.013}(0.0358)(0.0742)^{2/3}(0.0012)^{1/2} = \mathbf{1.68 \times 10^{-2}\ m^3/s}$$

14.36, 14.37, 14.38

$Q = 1.25$ ft³/s; $\upsilon = 2.75$ ft/s; $A = Q/\upsilon = 0.4545$ ft² (All)

Rectangle: $y = \sqrt{\frac{A}{2.0}} = \sqrt{\frac{0.4545}{2}}$ = **0.4767 ft; b** = $2y$ = **0.9535 ft**

$R = y/2 = 0.4767\text{ ft}/2 = 0.2384$ ft

$$S = \left[\frac{nQ}{1.49\,AR^{2/3}}\right]^2 = \left[\frac{(0.015)(1.25)}{(1.49)(0.4545)R^{2/3}}\right]^2 = \left[\frac{0.02768}{R^{2/3}}\right]^2 = \left[\frac{0.02768}{(0.2384)^{2/3}}\right]^2$$

= **0.00519**

$$y_h = \frac{A}{T} = \frac{2y^2}{2y} = y = 0.4767\text{ ft: } N_F = \frac{\upsilon}{\sqrt{gy_h}} = \frac{2.75}{\sqrt{(32.2)(0.4767)}}$$

= **0.702** < 1.0 **Subcritical**

Triangle: $y = \sqrt{A} = \sqrt{0.4545}$ = **0.674 ft**; $R = 0.354y = 0.2387$ ft

$$S = \left[\frac{0.02768}{(0.2387)^{2/3}}\right]^2 = \mathbf{0.00518}$$

$$y_h = \frac{A}{T} = \frac{y^2}{2y} = \frac{y}{2} = 0.337\text{ ft: } N_F = \frac{2.75}{\sqrt{(32.2)(0.337)}}$$ = **0.835** < 1.0 **Subcritical**

Trapezoid: $y = \sqrt{\dfrac{A}{1.73}} = \sqrt{\dfrac{0.4545}{1.73}}$ = **0.5126 ft**; $R = y/2 = 0.2563$ ft

$$S = \left[\frac{0.02768}{(0.2563)^{2/3}}\right]^2 = \mathbf{0.00471};$$

$$y_h = \frac{A}{T} = \frac{A}{2.309y} = \frac{0.4545}{2.309(0.5126)} = 0.3841 \text{ ft}$$

$$N_F = \frac{2.75}{\sqrt{(32.2)(0.3841)}} = \mathbf{0.782} < 1.0 \textbf{ Subcritical}$$

Semicircle: $A = \dfrac{\pi y^2}{2}; y = \sqrt{\dfrac{2A}{\pi}} = \sqrt{\dfrac{2(0.4545)}{\pi}}$ = **0.5379 ft**

$$R = y/2 = 0.269 \text{ ft: } S = \left[\frac{0.02768}{(0.269)^{2/3}}\right]^2 = \mathbf{0.00441}$$

$$y_h = \frac{A}{T} = \frac{\pi y^2}{2(2y)} = \frac{\pi y}{4} = 0.4225 \text{ ft}$$

$$N_F = \frac{2.75}{\sqrt{(32.2)(0.4225)}} = 0.746 < 1.0 \textbf{ Subcritical}$$

14.39 a. When $y = y_c$, $N_F = 1.0 = \dfrac{\upsilon}{\sqrt{gy_h}} = \dfrac{Q}{A\sqrt{gy}} = \dfrac{Q}{(by)\sqrt{gy}} = \dfrac{Q}{b\sqrt{g}\, y^{3/2}}$

Then $y = \left[\dfrac{Q}{b\sqrt{g}N_F}\right]^{2/3} = \left[\dfrac{5.5}{2.0\sqrt{9.81}(1.0)}\right]^{2/3}$ = **0.917 m =** $\boldsymbol{y_c}$

b. Minimum E occurs when $y = y_c$: From Eq. 14.18:

$$E_{\min} = y_c + \frac{Q^2}{2gA^2} = y_c + \frac{Q^2}{2g(by_c)^2} = y_c + \frac{Q^2}{2gb^2y_c^2}$$

$$= 0.917 + \frac{5.5^2}{2(9.81)(2.0)^2(.917)^2}$$

$\boldsymbol{E_{\min}}$ **= 1.375 m**

c. See spreadsheet and graph for values of y versus E.

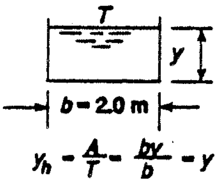

d. For $y = 0.50$ m; $E = 0.50 + \dfrac{5.5^2}{2(9.81)(2.0)^2(0.5)^2}$

= **2.042 m**

From spreadsheet, alternate depth = 1.934 m

e. $\upsilon = \dfrac{Q}{A} = \dfrac{Q}{by} = \dfrac{5.5}{2.0y}; N_F = \dfrac{\upsilon}{\sqrt{gy}}$

For $y = 0.5$ m, υ = **5.50 m/s**; $\boldsymbol{N_F}$ **= 2.48**

For $y = 1.934$ m, υ = **1.418 m/s**; $\boldsymbol{N_F}$ **= 1.325**

Rectangular channel

$b = 2$		$Q = 5.5$	$n = 0.017$
$\boldsymbol{E = y + 0.3854/y^2}$		Only for this problem	
y =	E_{min}=		
0.0917	1.375	Critical depth–See Solution Manual	

d), e), f)

Given y =	***E***	***A***	**Velocity**	$\boldsymbol{N_F}$	***R***	***S***	
0.50	2.04160	1.000	5.500	2.483	0.333	0.0378	Given y
1.9391	2.04160	3.878	1.418	0.325	0.660	0.0010	Alternate depth for given depth by iteration on y to make E the same as for the given y

y	***E***
0.5	154.2
0.1	38.6
0.20	9.835
0.40	2.809
0.60	1.671
0.80	1.402
1.00	1.385
1.20	1.468
1.40	1.597
1.60	1.751
1.80	1.919
2.00	2.096
2.20	2.280
2.40	2.467
2.60	2.657
2.80	2.849
3.00	3.043
3.20	3.238
3.40	3.433
3.60	3.630
3.80	3.827
4.00	4.024
4.20	4.222
4.40	4.420
4.60	4.618

c) Equation for E (in m) as a function of y: $A = by$; $A^2 = b^2y^2$
Given: $b = 2.0$ m; $Q = 5.5$ m^3/s; $v = Q/A$

$$E = y + v^2/2g = y + Q^2/2gA^2 = Q^2/2gb^2y^2$$
$$E = y = (5.5)^2 / [3(9.81)(2.0)^2y^2] = y + 0.3854/y^2$$

f) $$S = \left[\frac{nQ}{AR^{2/3}}^{2}\right];\ A = by = 2.0y$$

$$WP = b + 2y = 2 + 2y$$

$$R = \frac{A}{WP} = \frac{2.0y}{2+2y} = \frac{y}{1+y}$$

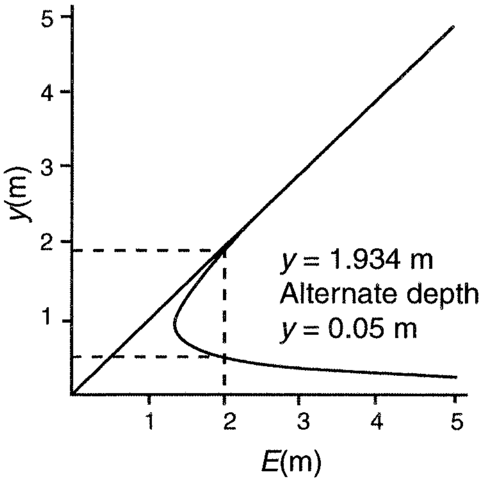

14.40 **Circular Channel**

$Q =$ 1.45 m^3/s $n =$ 0.015 Finished concrete

$D =$ 1.20 m

$y(m)$	θ(rad)	$A(m^2)$	T(m)	y_h(m)	N_F	$E(m)$	Velocity (m/s)	
y* less than *D								
0.10	1.171	0.0450	0.6633	0.068	39.478	52.982	32.211	
0.20	1.682	0.1239	0.8944	0.139	10.039	7.181	11.703	
0.25	1.896	0.1707	0.9747	0.175	6.481	3.928	8.494	
0.30	2.094	0.2211	1.0392	0.213	4.539	2.492	6.558	
0.40	2.462	0.3300	1.1314	0.292	2.597	1.384	4.394	
0.50	**2.807**	**0.4460**	**1.1832**	**0.377**	**1.690**	**1.039**	**3.251**	**Given *y***
0.60	3.142	0.5655	1.2000	0.471	1.193	0.935	2.564	
y* greater than *D								
0.658	3.335	0.6349	1.1944	0.532	1.000	0.924	2.284	**Critical depth**
0.70	3.476	0.6849	1.1832	0.579	0.888	0.928	2.117	
0.80	3.821	0.8010	1.1314	0.708	0.687	0.967	1.810	
0.90	4.189	0.9099	1.0392	0.876	0.544	1.029	1.594	
0.913	**4.238**	**0.9231**	**1.0240**	**0.901**	**0.528**	**1.039**	**1.571**	**Alt depth for given *y***
1.00	4.601	1.0071	0.8944	1.126	0.433	1.106	1.440	
1.199	6.168	1.1309	0.0693	16.330	0.101	1.283	1.282	**Nearly full pipe depth**
1.20	6.283	1.1310	0.0000	#DIV/0!	#DIV/0!	1.284	1.282	**Full pipe** (y_h and N_F undefined)

Part f of problem: Slopes for given *y* and alternate depth

y(m)	R(m)	S	
0.50	0.2649	0.0140	S for given y
0.913	0.3630	0.0021	S for alternate depth

Problem 14.40 Procedure: Refer to Table 14.2 for geometry of a partially full circular pipe.

a) For given Q, D, and y: Compute θ, A, T using equations in Table 14.2.
Compute $N_F = v/\sqrt{gy_h} = Q\left(A\sqrt{gy_h}\right)$.
Iterate values of y until $N_F = 1.000$. See spreadsheet: y_c = **0.658 m**.

b) Minimum specific energy: $E = y + v^2/2g = y + Q^2/(2gA^2)$
From spreadsheet, with $y = y_c = 0.658$ m: E_{min} = **0.924 m**.

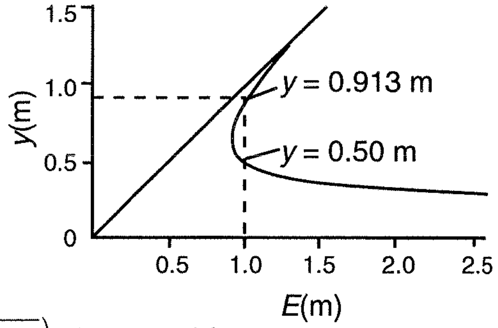

c) Specific energy versus y:
See spreadsheet using equation in b).

d) Specific energy for $y = 0.50$ m:
$E = 1.039$ m from spreadsheet.
Iterate on y to find alternate depth for which $E = 0.1039$ m.
See spreadsheet: y_{alt} = **0.913 m**.

e) Velocity = $v = Q/A$, $N_F = v/\sqrt{gy_h} = Q/\left(A\sqrt{gy_h}\right)$. See spreadsheet

For y = 0.50 m: v = 3.251 m/s, N_F = 1.690. Supercritical
For y = 0.913 m: v = 1.571 m/s, N_F = 0.528. Subcritical.

f) Compute $WP = \theta D/2$ (See Table 14.2). Compute $R = A/WP$.

Compute S: $\left[\dfrac{nQ}{AR^{2/3}}\right]^2$

See spreadsheet: For $y = 0.50$ m, $S = 0.0140$. For $y = 0.913$ m, $S = 0.0021$.

14.41 **Triangular channel**

$z =$ 1.5 $n = 0.022$

$Q =$ 0.68 ft³/s

y(ft)	A(ft²)	V(ft/s)	T(ft)	y_h(ft)	N_F	E(ft)	
0.20	0.060		0.60	0.100	6.316	2.194	
0.25	**0.094**	**7.253**	**0.75**	**0.125**	**3.615**	**1.067**	**Given y**
0.30	0.135		0.90	0.150	2.292	0.694	
0.40	0.240		1.20	0.200	1.116	0.525	
0.418	**0.262**	**2.594**	**1.254**	**0.209**	**1.000**	**0.523**	**Critical depth**
0.50	0.375		1.50	0.250	0.639	0.551	
0.60	0.540		1.80	0.300	0.405	0.625	
0.70	0.735		2.10	0.350	0.276	0.713	
0.80	0.960		2.40	0.400	0.197	0.808	
0.90	1.215		2.70	0.450	0.147	0.905	
1.00	1.500		3.00	0.500	0.113	1.003	
1.065	**1.701**	**0.400**	**3.20**	**0.533**	**0.097**	**1.067**	**Alternate depth**
1.10	1.815		3.30	0.550	0.089	1.102	
1.20	2.160		3.60	0.600	0.072	1.202	
1.30	2.535		3.90	0.650	0.059	1.301	
1.40	2.940		4.20	0.700	0.049	1.401	
1.50	3.375		4.50	0.750	0.041	1.501	

Slopes at given depth and alternate depth

y(ft)	R(ft)	S	
0.25	0.10401	0.521	Slope for given depth
1.065	0.44307	0.000229	Slope for alternate depth

Problem 14.41 Procedure: Refer to Table 14.2 for geometry of a triangular channel.

a) For given Q, z, and y: Compute A, T using equations in Table 14.2.
Compute $N_F = v/\sqrt{gy_h} = Q/\left(A\sqrt{gy_h}\right)$.
Iterate values of y until $N_F = 1.000$.
See spreadsheet: $\mathbf{y_c = 0.418}$ **ft.**

b) Minimum specific energy:
$E = y + v^2/2g = y + Q^2/(2gA^2)$
From spreadsheet, with $y = y_c = 0.418$ ft:
$\mathbf{E_{min} = 0.523}$ **ft.**

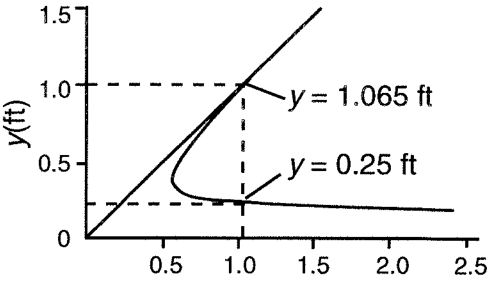

c) Specific energy versus y: See spreadsheet using equation in b).

d) Specific energy for $y = 0.25$ ft: $E = 1.067$ ft from spreadsheet.
Iterate on y to find alternate depth for which $E = 0.1067$ ft.
See spreadsheet: $\mathbf{y_{alt} = 1.065}$ **ft.**

e) Velocity = $v = Q/A$, $N_F = v/\sqrt{gy_h} = Q/\left(A\sqrt{gy_h}\right)$. See spreadsheet

For y = **0.25 ft: v = 7.253 ft/s, N_F = 3.615. Supercritical**
For y = **1.065 ft: v = 0.400 ft/s, N_F = 0.097. Subcritical.**

f) Compute $WP = 2y\sqrt{1+z^2}$ (See Table 14.2). Compute $R = A/WP$.

Compute S: $\left[\frac{nQ}{AR^{2/3}}\right]^2$

See spreadsheet: For y = **0.25 ft, S = 0.0521.** For y = **1.065 ft, S = 0.000229.**

14.42 Trapezoidal channel

z = 0.75 n = 0.013
Q = 0.80 ft^3/s b = 3.000 ft

y(ft)	A(ft^2)	V(ft/s)	T(ft)	Y_h(ft)	N_F	E(ft)	
0.05	**0.152**	**5.267**	**3.08**	**0.049**	**4.177**	**0.481**	**Given y**
0.1	0.308	2.602	3.15	0.098	1.467	0.205	
0.1288	**0.399**	**2.006**	**3.19**	**0.125**	**1.000**	**0.191**	**Critical depth**
0.20	0.630	1.270	3.30	0.191	0.512	0.225	
0.25	0.797	1.004	3.38	0.236	0.364	0.266	
0.30	0.968	0.827	3.45	0.280	0.275	0.311	
0.40	1.320	0.606	3.60	0.367	0.176	0.406	
0.4770	**1.602**	**0.499**	**3.72**	**0.431**	**0.134**	**0.481**	**Alternate depth**
0.50	1.688	0.474	3.75	0.450	0.125	0.503	
0.60	2.070	0.386	3.90	0.531	0.093	0.602	
0.70	2.468	0.324	4.05	0.609	0.073	0.702	
0.80	2.880	0.278	4.20	0.686	0.059	0.801	
0.90	3.308	0.242	4.35	0.760	0.049	0.901	
1.00	3.750	0.213	4.50	0.833	0.041	1.001	
1.065	4.046	0.198	4.60	0.880	0.037	1.066	
1.10	4.208	0.190	4.65	0.905	0.035	1.101	
1.20	4.680	0.171	4.80	0.975	0.031	1.200	
1.30	5.168	0.155	4.95	1.044	0.027	1.300	
1.40	5.670	0.141	5.10	1.112	0.024	1.400	
1.50	6.188	0.129	5.25	1.179	0.021	1.500	

Slopes at given depth and alternate depth

y(ft)	R(ft)	S	
0.05	0.0486	0.264	Slope for given depth
0.477	0.3820	0.000152	Slope for alternate depth

Problem 14.42 Procedure: Refer to Table 14.2 for geometry of a trapezoidal channel.

a) For given Q, b, z, and y: Compute A, T using equations in Table 14.2.
Compute $N_F = v/\sqrt{gy_h} = Q/\left(A\sqrt{gy_h}\right)$.

Iterate values of y until N_F = 1.000. See spreadsheet: y_c = **0.1288 ft.**

b) Minimum specific energy: $E = y + v^2/2g = y + Q^2/(2gA^2)$
From spreadsheet, with $y = y_c$ = 0.1288 ft: E_{min} = **0.191 ft.**

c) Specific energy versus y: See spreadsheet using equation in b).

d) Specific energy for $y = 0.05$ ft: $E = 0.481$ ft from spreadsheet.
Iterate on y to find alternate depth for which $E = 0.481$ ft.
See spreadsheet: y_{alt} = **0.4770 ft.**

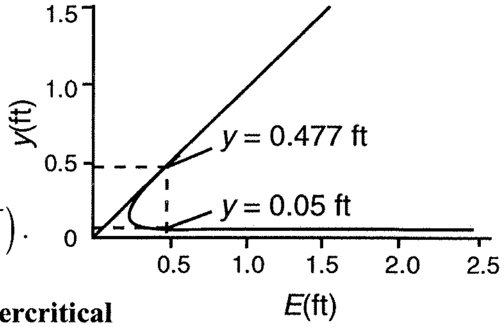

e) Velocity = $v = Q/A$, $N_F = v/\sqrt{gy_h} = Q/\left(A\sqrt{gy_h}\right)$.
See spreadsheet
For **y = 0.05 ft: v = 5.267 ft/s, N_F = 4.177. Supercritical**
For **y = 0.4770 ft: v = 0.499 ft/s, N_F = 0.134. Subcritical.**

f) Compute $WP = b + 2y\sqrt{1+z^2}$ (See Table 14.2). Compute $R = A/WP$.
Compute S: $\left[\dfrac{nQ}{AR^{2/3}}\right]^2$
See spreadsheet: For $y = 0.05$ ft, $S = 0.264$. For $y = 0.4770$ ft, $S = 0.000152$.

14.43 $H_{max} = 6$ in/tan 30° = 10.4 in × ft/12 in = 0.867 ft
$Q_{max} = 1.43\,H_{max}^{5/2} = (1.43)(0.867)^{5/2} =$ **1.00 ft³/sec**

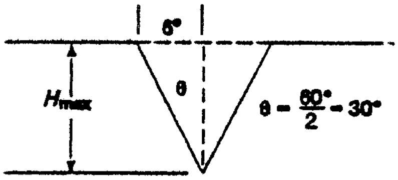

14.44 $H = 1.5$ ft; $H_c = 3$ ft; $Q = 15$ ft³/sec; use Eq. (14.15)
$Q = [3.27 + 0.40(1.5/3.0)][L - 0.2(1.5)](1.5)^{3/2}$
$= (3.47)(L - 0.3)(1.838)$
$$L - 0.3 = \frac{Q}{(3.47)(1.838)} = \frac{15}{(3.47)(1.838)} = 2.36 \text{ ft}$$
$L = 2.36$ ft + 0.30 ft = **2.66 ft**

14.45 $(Q = 3.27 + 0.40H/H_c)LH^{3/2}$
$H_c = 2$ ft; $L = 6$ ft

		Prob. (15.10)	(15.11)
H(in)	H(ft)	Q(ft³/sec)	Q
0	0	0.00	0.00
2	.167	1.35	1.34
4	.333	3.84	3.80
6	.500	7.14	7.03
8	.667	11.10	10.90
10	.833	15.70	15.48
12	1.000	20.80	20.40

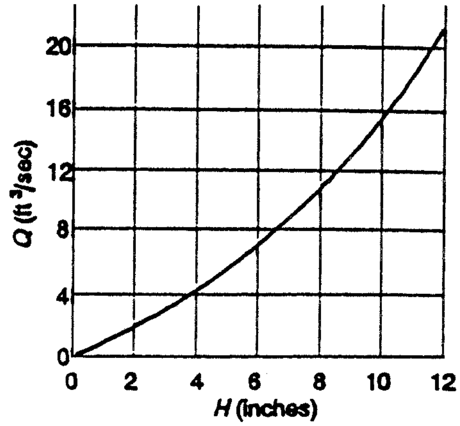

14.46 $Q = (3.27 + 0.40H/H_c(L - 0.2H)H^{3/2}$
Negligible difference on graph.

14.47 (a) $Q = (3.27 + 0.4H/H_c)LH^{3/2} = [3.27 + 0.4(1.5/4)](3)(1.5)^{3/2} =$ **18.8 ft³/sec**
(b) $Q = (3.27 + 0.4H/H_c)(L - 0.2H)H^{3/2} = (3.42)(2.70)(1.5)^{3/2} =$ **16.95 ft³/sec**
(c) $Q = 2.48H^{5/2} = (2.48)(1.5)^{5/2} =$ **6.84 ft³/sec**

14.48 $Q = 2.48H^{5/2}$

H(in)	H(ft)	Q(ft^3/sec)
0	0	0
2	.167	.0283
4	.333	.159
6	.500	.439
8	.667	.900
10	.833	1.57
12	1.000	2.48

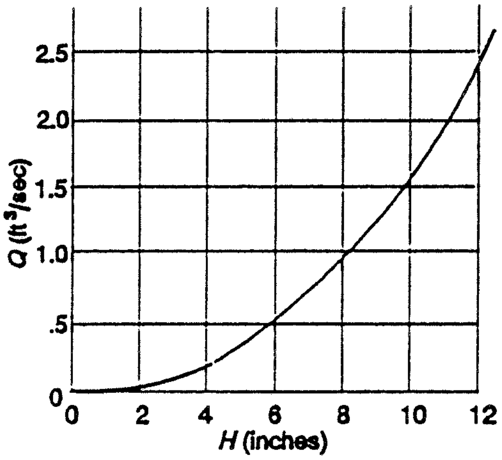

14.49 $Q = 3.07H^{1.53}$

$H^{1.53} = Q/3.07 \therefore H = (Q/3.07)^{1/1.53}$

Min $Q = 0.09$ ft^3/sec

$H = (0.09/3.07)^{1/1.53} = (0.0293)^{0.654}$

$= \mathbf{0.10\ ft}$

Max $Q = 8.9$ ft^3/sec

$H = (8.9/3.07)^{1/1.53} = (2.90)^{0.654}$

$= \mathbf{2.01\ ft}$

14.50 $L = 8.0$ ft; $Q_{min} = 3.5$ ft^3/s; $Q_{max} = 139.5$ ft^3/s

$Q = 4.00\ LH^n$; $H = [Q/4.00)L)^{1/n} = [Q/(4.00)(8.0)]^{1/1.61} = [Q/32]^{0.621}$

$Q_{min} = 3.5$ ft^3/s; $H = [3.5/32]^{0.621} = \mathbf{0.253\ ft}$

$Q_{max} = 139.5$ ft^3/s; $H = [139.5/32]^{0.621} = \mathbf{2.496\ ft}$

H(ft)	Q(ft^3/sec)
0.25	3.434
1.00	32.000
1.50	61.469
2.00	97.681
2.25	118.077
2.50	139.905

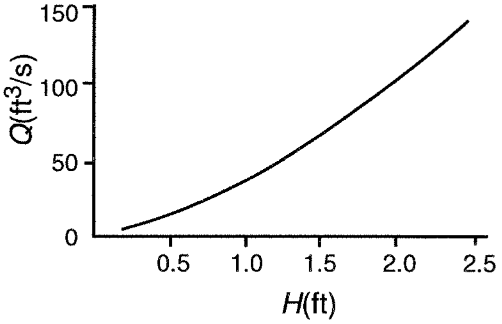

14.51 a) $Q = 50$ ft^3/s; $L = 4.0$ ft; $Q = 4.00\ LH^n$; $n = 1.58$

$H = [Q/(4.00)L]^{1/n} = [50/(4.00)(4.0)]^{1/1.58} = [3.125]^{0.633} = \mathbf{2.06\ ft}$

b) $L = 10.0$ ft

$Q = (3.6875L + 2.5)H^{1.6} = 39.375H^{1.6}$

$$H = \left(\frac{Q}{39.375}\right)^{1/1.6} = \left(\frac{50}{39.375}\right)^{0.625} = \mathbf{1.155\ ft}$$

14.52 Trapezoidal channel—Long-throated flume – Design C: $H = 0.84$ ft; $Q = K_1(H + K_2)^n$

$K_1 = 16.180$; $K_2 = 0.035$; $n = 1.784$

$Q = 16.180[0.84 + 0.035]^{1.784} = \mathbf{12.75\ ft^3/s} = \boldsymbol{Q}$

14.53 Trapezoidal channel—Long-throated flume – Design B: $H = 0.65$ ft; $Q = K_1(H + K_2)^n$
$K_1 = 14.510$; $K_2 = 0.053$; $n = 1.855$
$Q = 14.510[0.65 + 0.053]^{1.855} =$ **7.547 ft³/s = *Q***

14.54 Rectangular channel—Long-throated flume – Design A: $H = 0.35$ ft; $Q = b_c K_1(H + K_2)^n$
$b_c = 0.500$ ft; $K_1 = 3.996$; $K_2 = 0.000$; $n = 1.612$
$Q = (0.500)(3.996)[0.35 + 0.000]^{1.612} =$ **0.368 ft³/s = *Q***

14.55 Rectangular channel—Long-throated flume – Design C: $H = 0.40$ ft; $Q = b_c K_1(H + K_2)^n$
$b_c = 1.500$ ft; $K_1 = 3.375$; $K_2 = 0.011$; $n = 1.625$
$Q = (1.500)(3.375)[0.40 + 0.011]^{1.625} =$ **1.194 ft³/s = *Q***

14.56 Circular channel—Long-throated flume – Design B: $H = 0.25$ ft; $Q = D^{2.5} K_1 (H/D + K_2)^n$
$D = 2.00$ ft; $K_1 = 3.780$; $K_2 = 0.000$; $n = 1.625$
$Q = (2.00)^{2.5}(3.780)[0.25/2.00 + 0.000]^{1.625} =$ **0.729 ft³/s = *Q***

14.57 Circular channel—Long-throated flume – Design A: $H = 0.09$ ft; $Q = D^{2.5} K_1 (H/D + K_2)^n$
$b_c = 1.00$ ft; $K_1 = 3.970$; $K_2 = 0.004$; $n = 1.689$
$Q = (1.00)^{2.5}(3.970)[0.09/1.00 + 0.004]^{1.689} =$ **0.0732 ft³/s = *Q***

14.58 Rectangular channel—Long-throated flume – Design B: $Q = 1.25$ ft³/s; Find H.
$Q = b_c K_1(H + K_2)^n$; $b_c = 1.00$ ft; $K_1 = 3.696$; $K_2 = 0.004$; $n = 1.617$
Solving for H: $H = [Q/(b_c K_1)]^{1/n} - K_2 = [1.25/(1.0)(3.696)]^{1/1.617} - 0.004 =$ **0.507 ft = *H***

14.59 Circular channel—Long-throated flume – Design C: $Q = 6.80$ ft³/s; Find H.
$Q = D^{2.5} K_1(H/D + K_2)^n$; $D = 3.000$ ft; $K_1 = 3.507$; $K_2 = 0.000$; $n = 1.573$
Solving for H: $H = D\{[Q/D^{2.5})(K_1)]^{1/n} - K_2\} = 3.0\{[6.80/(3.0^{2.5})(3.507)]^{1/1.573} - 0.00\}$
= **0.797 ft = *H***

14.60 Select a long-throated flume for 30 gpm < Q < 500 gpm. Using 449 gpm = 1.0 ft³/s,
0.0668 ft³/s < Q < 1.114 ft³/s; Select Circular channel; Design A; $Q = D^{2.5} K_1(H/D + K_2)^n$
$H = D\{[Q/D^{2.5})(K_1)]^{1/n} - K_2\}$; $D = 1.000$ ft; $K_1 = 3.970$; $K_2 = 0.004$; $n = 1.689$
For $Q = 0.0668$ ft³/s: $H = -1.0\{[0.0668/(1.0^{2.5})(3.970)]^{1/1.689} - 0.004\} =$ **0.0851 ft = *H***
For $Q = 1.114$ ft³/s: $H = -1.0\{[1.114/(1.0^{2.5})(3.970)]^{1/1.689} - 0.004\} =$ **0.467 ft = *H***

H	Q(ft³/s)	Q(gpm)
0.10	0.087	39.06
0.20	0.271	121.7
0.30	0.531	238.4
0.40	0.859	385.7

14.61 Given 50 $m^3/h < Q$, 180 m^3/h; Convert to ft^3/s; 0.4907 $ft^3/h < Q <$ 1.766 ft^3/h
Specify Rectangular channel long-throated flume, Design B.
Find H for each limiting flow rate.
$Q = b_c K_1(H + K_2)^n$; $b_c = 1.00$ ft; $K_1 = 3.696$; $K_2 = 0.004$; $n = 1.617$
Solving for H: $H_{min} = [Q/(b_cK_1)]^{1/n} - K_2 = [0.4907/(1.0)(3.696)]^{1/1.617} - 0.004$
$= \mathbf{0.2829}$ **ft** $= \boldsymbol{H_{min}}$
Converting to m: $\boldsymbol{H_{min}} = \mathbf{0.0863}$ **m for** $\boldsymbol{Q} = \mathbf{50}$ $\mathbf{m^3/h}$
$H_{max} = [Q/b_cK_1)]^{1/n} - K_2 = [1.766/(1.0)(3.696)1/1.617 - 0.004 = 0.629$ ft $= H_{max}$
Converting to m: $\boldsymbol{H_{max}} = \mathbf{0.1917}$ **m for** $\boldsymbol{Q} = \mathbf{180}$ $\mathbf{m^3/h}$

H(m)	H(ft)	$Q(ft^3/s)$	$Q(m^3/h)$
0.100	0.328	0.622	63.38
0.125	0.410	0.888	90.49
0.150	0.492	1.190	121.3
0.175	0.524	1.524	155.3

CHAPTER FIFTEEN

FLOW MEASUREMENT

15.1 $Q = CA_1\left[\frac{2g(p_1 - p_2)/\gamma}{(A_1/A_2)^2 - 1}\right]^{1/2} = (0.984)(7.854\times10^{-3})\left[\frac{2(9.81)(55)/9.53}{[(7.854\times10^{-3})/(1.964\times10^{-3})]^2 - 1}\right]^{1/2}$ (0.984 — Assumed)

$Q = 2.12 \times 10^{-2}$ m³/s= **0.0212 m³/s** Now check N_R and re-evaluate C.

$$\upsilon_1 = \frac{Q}{A_1} = \frac{2.12\times10^{-2}\ \text{m}^3/\text{s}}{7.854\times10^{-3}\ \text{m}^2} = 2.70\ \text{m/s}$$

$$N_R = \frac{\upsilon_1 D_1}{\upsilon} = \frac{(2.70)(0.10)}{3.60\times10^{-7}} = 7.5\times10^5$$ Then $C = 0.984$; **OK**

15.2 $p_1 - p_2 = \gamma_w h_w = (9.81\ \text{kN/m}^3)(0.081\ \text{m}) = 0.795\ \text{kN/m}^2$

$$\frac{p_1 - p_2}{\gamma_{air}} = \frac{0.795\ \text{kN/m}^2}{12.7\ \text{N/m}^3}\times\frac{10^3\ \text{N}}{1\ \text{kN}} = 62.57\ \text{m}$$

Assume $C = 0.98$

$Q = CA_1\left[\frac{2gh[\gamma_m/\gamma_w - 1)}{(A_1/A_2)^2 - 1}\right]^{1/2} = (0.98)(7.854\times10^{-3})\left[\frac{2(9.81)(0.81)/[9810/12.7 - 1]}{[(7.854\times10^{-3})/(1.964\times10^{-3})]^2 - 1}\right]^{1/2}$ (0.98 — Assumed)

$Q = 6.96 \times 10^{-2}\ \text{m}^3/\text{s}$

Check C from Fig. 15.5.

$$\upsilon = \frac{Q}{A_1} = \frac{6.96\times10^{-2}\ \text{m}^3/\text{s}}{7.854\times10^{-3}} = 8.87\ \text{m/s}$$

$$N_R = \frac{\upsilon_1 D_1}{\nu} = \frac{(8.87)(0.100)}{1.3\times10^{-5}} = 6.82\times10^4\}$$ Then $C = 0.98$, **OK**

15.3 $A_1 = 0.02333\ \text{ft}^2$; $A_2 = 0.00545\ \text{ft}^2$; $A_2 A_1 = 0.234$

$D = 2.067$ in; $d/D = 1.00/2.067$ in $= 0.484$; try $C = 0.605$ (Fig. 15.7)

$Q = CA_1\left[\frac{2g(p_1 - p_2)/\gamma}{(A_1/A_2)^2 - 1}\right]^{1/2} = (0.605)(0.02333)\left[\frac{2(32.2)(0.53)(144)/51.2}{[(0.02333)/(0.00545)]^2 - 1}\right]^{1/2}$ (0.605 — Assumed)

$= 0.0332\ \text{ft}^3/\text{sec}$

$$\upsilon_1 = \frac{Q}{A_1} = \frac{0.0332\ \text{ft}^3/\text{sec}}{0.02333\ \text{ft}^2} = 1.42\ \text{ft/sec}$$

$$N_R = \frac{\upsilon_1 D_1 \rho}{\mu} = \frac{(1.42)(0.1723)(1.60)}{3.43\times10^{-5}} = 1.14\times10^4$$

Then $C = 0.612$ (Fig. 15.7)—Recompute Q

$Q = 0.0332\ \text{ft}^3/\text{sec} \times 0.612/0.605 =$ **0.0336 ft³/sec**

$\upsilon = Q/A = 1.44$ ft/sec; $N_R = 1.16\times10^4$; No change in C

15.4 $Q = 25$ gal/min × 1 ft³/sec/449 gal/min $= 0.0557$ ft³/sec

$\upsilon = Q/A = 0.0557$ ft³/sec/0.545 ft² $= 0.1022$ ft/sec

$$\text{pipe } N_R = \frac{\upsilon D\rho}{\mu} = \frac{(0.1022)(0.833)(0.83)(1.94)}{2.5\times10^{-6}} = 5.5 \times 10^4$$

(a) $d/D = 1.0/10.0 = 0.10$; $C = 0.595$ (Fig. 15.7)

(b) $d/D = 7.0/10.0 = 0.70$; $C = 0.620$

Solve for $p_1 - p_2$ from Eq. (15.5)

$$Q = CA_1\left[\frac{2g(p_1-p_2)/\gamma}{(A_1/A_2)^2-1}\right]^{1/2}; \text{ Then } Q^2 = C^2\ A_1^2\left[\frac{2g(p_1-p_2)/\gamma}{(A_1/A_2)^2-1}\right]$$

$$p_1 - p_2 = \frac{\gamma Q^2[(A_1/A_2)^2-1]}{2g\ C^2A_1^2}$$

(a) For $d = 1.0$ in, $A_2 = 0.00545$ ft²; $A_1/A_2 = 0.545/0.00545 = 100$

$$p_1 - p_2 = \frac{\gamma Q^2[(A_1/A_2)^2-1]}{2g\ C^2A_1^2} = \frac{(0.83)(62.4)(0.0557)^2[(100)^2-1]}{2(32.2)(0.595)^2(0.545)^2} = 238 \text{ lb/ft}^2$$

For Manometer

$p_1 + \gamma_A h - \gamma_w h = p_2$

$p_1 - p_2 = \gamma_w h - \gamma_A h = h(\gamma_w - \gamma_A)$

$h = \dfrac{p_1 - p_2}{\gamma_w - \gamma_A}$ But $\gamma_A = (0.83)(62.4 \text{ lb/ft}^3) = 51.8 \text{ lb/ft}^3$

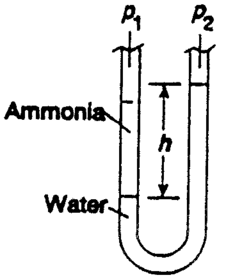

$$h = \frac{p_1-p_2}{62.4-51.8} = \frac{p_1-p_2}{10.6 \text{ lb/ft}^3} = \frac{238 \text{ lb/ft}^2}{10.6 \text{ lb/ft}^3} = \mathbf{22.4\ ft}$$

(b) For $d = 7.0$ in, $A_2 = \dfrac{\pi(7.0)^2 \text{ in}^2}{4} \times \dfrac{\text{ft}^2}{144 \text{ in}^2} = 0.267$ ft²

$A_1/A_2 = 0.545/0.267 = 2.04$

$$p_1 - p_2 = \frac{\gamma Q^2[(A_1/A_2)^2-1]}{2g\ C^2A_1^2} = \frac{(0.83)(62.4)(0.0557)^2[(2.04)^2-1]}{2(32.2)(0.620)^2(0.545)^2} = 0.0694 \text{ lb/ft}^2$$

$$h = \frac{p_1-p_2}{10.6} = \frac{0.0694 \text{ lb/ft}^2}{10.6 \text{ lb/ft}^3} = \mathbf{0.00655\ ft}$$

An orifice size between 1.0 in and 7.0 in would be preferred to give a more convenient manometer deflection.

15.5 Find Δp across nozzle, Q = 1800 gal/min(1 ft³/s)(449 gal/min) = 4.009 ft³/s

$v_1 = Q/A_1$ = (4.009 ft³/s)/(0.1810 ft²) = 22.15 ft/s

Water at 120°F; γ = 61.7 lb/ft³; $\nu = 5.94 \times 10^{-6}$ ft²/s

$N_R = v_1D_1/\nu = (22.15)(0.4801)(5.94 \times 10^{-6}) = 1.79 \times 10^6$; Then $C = 0.992$

From Eq. (15-4), solving for $p_1 - p_2 = \Delta p$

$\Delta p = [v_1/C]^2\ [(A_1/A_2)^2 - 1]\ [\gamma/2g] = [22.15/0.992]^2\ [(0.18/0.0668)^2 - 1][61.7/(2(32.2))]$

Δp = 3029 lb/ft² (1 ft²/144 in²) = **21.04 psi**

15.6 Find Δp across Venturi, Q = 600 gal/min(1 ft³/s)(449 gal/min) = 1.336 ft³/s
$v_1 = Q/A_1$ = (1.336 ft³/s)/(0.0844 ft²) = 15.12 ft/s
Kerosene at 77°F; γ = 51.2 lb/ft³; $\nu = 2.14 \times 10^{-5}$ ft²/s
$N_R = v_1D_1/\nu = (15.12)/(0.3355)/(2.14 \times 10^{-5}) = 2.37 \times 10^5$; Then $C = 0.984$
From Eq. (15-4), solving for $p_1 - p_2 = \Delta p$
$\Delta p = [v_1/C]^2\,[(A_1/A_2)^2 - 1]\,[\gamma/2g] = [15.12/0.984]^2\,[(0.0884/0.01227)^2 - 1][51.2/(2(32.2))]$
Δp = 9551 lb/ft² (1 ft²/144 in²) = **66.3 psi**

15.7 Find Q through an orifice meter. D_1 = 97.2 mm; $A_1 = 7.419 \times 10^{-3}$ m²; d = 50 mm = 0.050 m
$A_2 = 1.963 \times 10^{-3}$ m²; $A_1A_2 = 3.778$; $d/D = 0.05/0.0972 = 0.514$; Trial 1: $C = 0.608$ for $N_R = 1 \times 10^5$
Ethylene glycol at 25°C: γ = 10.79 kN/m³; $\nu = 1.47 \times 10^{-5}$ m²/s

$$v_1 = C\left[\frac{2gh[\gamma_m/\gamma_{eg} - 1]}{(A_1/A_2)^2 - 1}\right]^{1/2} = (0.608)\left[\frac{2(9.81)(0.095)/[132.8/10.79 - 1]}{[3.778]^2 - 1}\right]^{1/2}$$

v = 0.766 m/s; Iteration: New $N_R = 5.07 \times 10^3$; New $C = 0.623$
New v_1 = 0.785 m/s; New $N_R = 5.19 \times 10^3$; New $C = 0.623$ – Unchanged.
Final value of $Q = A_1v_1 = (7.419 \times 10^{-3}$ m²)(0.785 m/s) = $\mathbf{5.824 \times 10^{-3}}$ **m³/s =** $\boldsymbol{Q}$

15.8 Orifice meter. Propyl alcohol at 25°C; γ = 7.87 kN/m³; $\nu = 2.39 \times 10^{-6}$ m²/s
1 1/2 in × 0.065 in wall steel tube: D_1 = 34.8 mm = 0.0348 m; $A_1 = 9.51 \times 10^{-4}$ m²
Let $\beta = 0.40 = d/D$; Then $d = 0.40\,D$ = 0.40(34.8 mm) = 13.92 mm = 0.01392 m
$A_2 = \pi D^2/4 = \pi(0.01392\text{ m})^2/4 = 1.52 \times 10^{-4}$ m²; $A_1/A_2 = 6.26$
From Eq. (15-6), solve for h in mercury manometer; γ_m = 132.8 kN/m³

$$h = \frac{[(A_1/A_2)^2 - 1]v_1^2}{2gC^2[(\gamma_m/\gamma_a) - 1)]}$$

$v_{1\min} = Q_{\min}/A_1$ = (1.0 m³/h)/(9.51 × 10⁻⁴ m²)(1 h)/(3600 s) = 0.292 m/s
$N_{R1} = v_1D_1/\nu = (0.292)(0.0348)/(9.51 \times 10^{-4}\text{ m}^2) = 4.25 \times 10^3$; $C = 0.619$

$$h_{\min} = \frac{[(A_1/A_2)^2 - 1]v_{1\min}^2}{2gC^2[(\gamma_m/\gamma_a) - 1]} = \frac{[(6.26)^2 - 1](0.292\text{ m/s})^2}{2(9.81\text{ m/s}^2)(0.619)^2[(132.8/7.87) - 1]} = 0.0273\text{ m} = \mathbf{27.3\text{ mm}}$$

Similarly, $v_{1\max}$ = 0.730 m/s; $N_R = 1.06 \times 10^3$; $C = 0.610$
$h_{\max}$ = 0.1754 m = **175.4 mm**

15.9 Flow nozzle — Design: Install in 5 1/2 inch Type K copper tube; D_1 = 4.805 in; A_1 = 0.1259 ft²
Specify the throat diameter d. **NOTE:** *Multiple solutions possible.*
Fluid: Linseed oil at 77°F; γ = 58.0 lb/ft³; $\nu = 3.84 \times 10^{-4}$ ft²/s
Use mercury manometer with scale range 0 – 8 inHg
Range of flow rate: $Q_{\min}$ = 700 gpm = 1.559 ft³/s; $Q_{\max}$ = 1000 gpm = 2.227 ft³/s
Velocity in pipe: $v_{1\text{-min}} = Q_{\min}/A_1$ = 12.38 ft/s; $v_{1\text{-max}} = Q_{\max}/A_1$ = 17.69 ft/s
Reynolds No.: $N_{R\text{-min}} = v_{1\text{-min}}\,D_1/\nu = 1.29 \times 10^4$; $N_{R\text{-max}} = v_{1\text{-max}}\,D_1/\nu = 1.84 \times 10^4$
From Figure 15–5: $C_{\min} = 0.955$; $C_{\max} = 0.961$

a) Use Eq. (15-6) and solve for A_2 from which we can obtain the throat diameter d

$$A_2 = \frac{A_1}{\left[\frac{BhC^2}{v_1^2}+1\right]^{1/2}}$$

Where $B = 2g[(\gamma_m/\gamma_{Lo}) - 2(32.2)[844.9/58.0) - 1] = 873.7$

Let $h = 8.0$ in $= 0.667$ ft when $v = v_{1\text{-max}} = 17.69$ ft/s and $C = 0.961$

$$A_2 = \frac{0.1259}{\left[\frac{(873.7)(0.667)(0.961)^2}{(17.69)^2}+1\right]^{1/2}} = 0.07635\ \text{ft}^2 = \pi d^2/4$$

Then $d = (4A_2/\pi)^{1/2} = [(4)(0.07635)/\pi]^{1/2} = 0.3118$ ft $=$ **3.741 in = Throat diameter**

b) Use Eq. (15-6) and solve for h to determine the manometer reading when $Q = Q_{min}$.

$$h = \frac{(v_1/C)^2[(A_1/A_2)^2-1]}{B}$$

For $v_1 = v_{1\text{-min}} = 12.38$ ft/s and $C = 0.955$,

$$h = \frac{(v_1/C)^2[(A_1/A_2)^2-1}{B} = \frac{[(12.38/0.955)^2[(0.1259/0.07635)^2-1]}{873.73} = 0.3306\ \text{ft} = \mathbf{3.97\ in}$$

Summary: Nozzle throat diameter $= d = 3.741$ in
When $Q = 1000$ gpm, $h = 8.00$ in manometer deflection
When $Q = 700$ gpm, $h = 3.97$ in manometer deflection

15.10 Orifice Meter — Design: Install in 12 inch ductile iron pipe; $D_1 = 12.24$ in $= 1.020$ ft; $A_1 = 0.8171$ ft^2
Specify the orifice diameter d. **NOTE:** *Multiple solutions possible.*
Fluid: Water at 60°F; $\gamma = 62.4$ lb/ft^3; $\nu = 1.21 \times 10^{-5}$ ft^2/s
Use mercury manometer with scale range 0 – 12 inHg
Range of flow rate: $Q_{min} = 1500$ gpm $= 3.341$ ft^3/s; $Q_{max} = 4000$ gpm $= 8.909$ ft^3/s
Velocity in pipe: $v_{1\text{-min}} = Q_{min}/A_1 = 4.089$ ft/s; $v_{1\text{-max}} = Q_{max}/A_1 = 10.90$ ft/s
Reynolds No.: $N_{R\text{-min}} = v_{1\text{-min}} D_1/\nu = 3.45 \times 10^5$; $N_{R\text{-max}} = v_{1\text{-max}} D_1/\nu = 9.19 \times 10^5$
From Figure 15-5: $C_{min} = 0.612$; $C_{max} = 0.610$ [Assumed $\beta = d/D = 0.70$]

a) Use Eq.(15-6) and solve for A_2 from which we can obtain the throat diameter d.

$$A_2 = \frac{A_1}{\left[\frac{BhC^2}{v_1^2}+1\right]^{1/2}}$$

Where $B = 2g[(\gamma_m/\gamma_w) - 1] = 2(32.2)[(844.9/62.4) - 1] = 807.6$

Let $h = 10.0$ in $= 0.833$ ft when $v = v_{1\text{-max}} = 10.90$ ft/s and $C = 0.610$

$$A_2 = \frac{0.8171}{\left[\frac{(807.6)(0.833)(0.610)^2}{(10.90)^2}+1\right]^{1/2}} = 0.4636 \text{ ft}^2 = \pi d^2/4$$

Then $d = (4A_2/\pi)^{1/2} = [(4)(0.4636)/\pi]^{1/2} = 0.7683$ ft = **9.219 in = Throat diameter**
Actual $\beta = d/D = 9.219/12.24 = 0.753$; Assumed C values OK.

b) Use Eq. (15-6) and solve for h to determine the manometer reading when $Q = Q_{min}$.

$$h = \frac{(v_1/C)^2[(A_1/A_2)^2-1]}{B}$$

For $v_1 = v_{1-min} = 4.089$ ft/s and $C = 0.612$

$$h = \frac{(v_1/C)^2[(A_1/A_2)^2-1]}{B} = \frac{[(4.089/0.612)^2[(0.8171/0.4636)^2-1]}{807.6} = 0.1164 \text{ ft} = \mathbf{1.40\ in}$$

Summary: Nozzle throat diameter = d = 9.219 in.
When Q = 4000 gpm, h = 10.0 in manometer deflection
When Q = 1500 gpm, h = 1.40 in manometer deflection

15.11 $\upsilon = \sqrt{2gh(\gamma_g - \gamma)/\gamma}$; h = 225 mm = 0.225 m
γ_g = 132.8 kN/m³ (mercury); γ = 7.74 kN/m³ (methyl alcohol)
$\upsilon = \sqrt{2(9.81)(0.225)(132.8-7.74)/7.74}$ = **8.45 m/s**

15.12 $\upsilon = \sqrt{2gh(\gamma_g - \gamma)/\gamma}$ Solve for h (γ_{air} = 11.05 N/m³)

$$h = \frac{\gamma\upsilon^2}{2g(\gamma_g - \gamma)}$$

(γ_g = 9.73 kN/m³ = 9.73 × 10³ N/m³)

($\gamma_g - \gamma$ = 9.719 × 10³ N/m³ = 9719 N/m³)

$$h = \frac{(11.05)(25)^2}{2(9.81)(9719)} \text{ m} = 0.036 \text{ m} \times 10^3 \text{ mm/m} = \mathbf{36\ mm}$$

15.13 $\upsilon = \sqrt{2gh(\gamma_g - \gamma)/\gamma} = \sqrt{2(9.81)(0.106)(132.8-9.81)/9.81}$ = **5.11 m/s**

15.14 Pitot-static tube carrying air at atmospheric pressure and 50°C. γ_a = 10.71 N/m³.
h = 4.80 mmH_2O; h = (4.80 mm)(1 m/1000 mm) = 0.0048 mH_2O; $\gamma_g = \gamma_w$ = 9810 N/m³
Find flow velocity v.

$$v = \sqrt{2gh(\gamma_w - \gamma_a)/\gamma_a} = \sqrt{2(9.81 \text{ m/s}^2)(0.0048 \text{ m})(9810-10.71)/10.71} = 9.28 \text{ m/s}$$

15.15 Pitot-static tube carrying air at atmospheric pressure and 80°F. γ_a = 0.0736 lb/ft³.
h = 0.24 inH_2O; h = (0.24 in)(1.0 ft/12 in) = 0.02 ft; $\gamma_g = \gamma_w$ = 62.4 lb/ft³
Find flow velocity v.

$$v = \sqrt{2gh(\gamma_w - \gamma_a)/\gamma_a} = \sqrt{2(32.2 \text{ ft}^2/\text{s})(0.02 \text{ ft})(62.4-0.0736)/0.0736} = 33.0 \text{ ft/s}$$

CHAPTER SIXTEEN

FORCES DUE TO FLUIDS IN MOTION

16.1 $Q = A\upsilon = \dfrac{\pi(0.075\text{ m})^2}{4} \times \dfrac{25\text{ m}}{\text{s}} = \dfrac{0.1104\text{ m}^3}{\text{s}}$

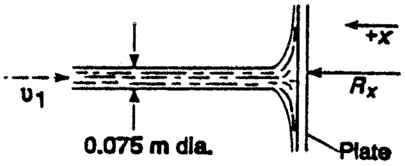

$R_x = \rho Q\left(\upsilon_{2_x} - \upsilon_{1_x}\right) = \rho Q(0 - (-\upsilon_1)) = \rho Q\upsilon_1$

$R_x = \dfrac{1000\text{ kg}}{\text{m}^3} \times \dfrac{0.1104\text{ m}^3}{\text{s}} \times \dfrac{25\text{ m}}{\text{s}} = \dfrac{2761\text{ kg}\cdot\text{m}}{\text{s}^2}$

$= 2761\text{ N} = \mathbf{2.76\ kN}$

16.2 See sketch for Problem 16.1: $R_x = \rho Q\upsilon_1 = \rho(A\upsilon_1)\upsilon_1 = \rho A\upsilon_1^2$

$\upsilon = \sqrt{\dfrac{R_x}{\rho A}} = \sqrt{\dfrac{300\text{ lb}\ \ 144\text{ in}^2/\text{ft}^2}{(1.94\text{ lb-s}^2/\text{ft}^4)\left(\pi(2.0\text{ in})^2/4\right)}} = \mathbf{84.2\ ft/s}$

16.3 $Q = 150\text{ gal/min} \times \dfrac{1\text{ ft}^3/\text{s}}{449\text{ gal/min}} = 0.334\text{ ft}^3/\text{s}$

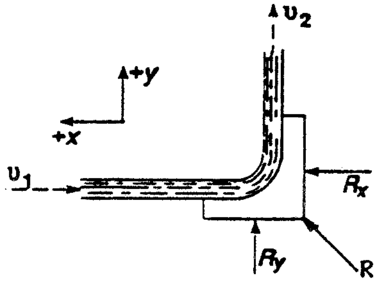

$\upsilon_1 = \upsilon_2 = \dfrac{Q}{A} = \dfrac{0.324\text{ ft}^3/\text{s}}{\pi(1/12\text{ ft})^2/4} = 61.25\text{ ft/s}$

$R_x = \rho Q\left(\upsilon_{2_x} - \upsilon_{1_x}\right) = \rho Q(0 - (-\upsilon_1)) = \rho Q\upsilon_1$

$R_x = \dfrac{1.94\text{ lb-s}^2}{\text{ft}^4} \times \dfrac{0.334\text{ ft}^3}{\text{s}} \times \dfrac{61.25\text{ ft}}{\text{s}} = \mathbf{39.7\ lb}$

$R_y = \rho Q\left(\upsilon_{2_y} - \upsilon_{1_y}\right) = \rho Q(\upsilon_2 - 0) = \rho Q\upsilon_2 = \rho Q\upsilon_1 = \mathbf{39.7\ lb}$

16.4 Assume all air leaves parallel to the face of the sign.

$\upsilon_1 = 125\text{ km/h} \times \dfrac{10^3\text{ m}}{\text{km}} \times \dfrac{1\text{ h}}{3600\text{ s}} = 34.7\text{ m/s}$

$R_x = \rho Q\left(\upsilon_{2_x} - \upsilon_{1_x}\right) = \rho Q(0 - (-\upsilon_1)) = \rho Q\upsilon_1 = \rho(A\upsilon_1)(\upsilon_1) = \rho A\upsilon_1^2$

$R_x = \dfrac{1.341\text{ kg}}{\text{m}^3} \times (3\text{ m})(4\text{ m}) \times \dfrac{(34.7)^2\text{ m}^2}{\text{s}^2} = \dfrac{19.4\times10^3\text{ kg}\cdot\text{m}}{\text{s}^2} = \mathbf{19.4\ kN}$

Equivalent pressure $= p = \dfrac{R_x}{A} = \dfrac{19.4\times10^3\text{ N}}{12\text{ m}^2} = \dfrac{1617\text{ N}}{\text{m}^2} = \mathbf{1617\ Pa}$

16.5 $Q = A\upsilon = \dfrac{\pi(1.75\text{ in})^2}{4} \times \dfrac{\text{ft}^2}{144\text{ in}^2} \times \dfrac{25\text{ ft}}{\text{s}}$
$= 0.418\text{ ft}^3/\text{s}$

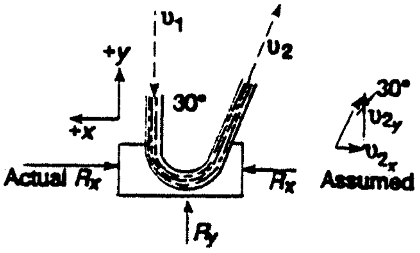

$R_x = \rho Q(\upsilon_{2_x} - \upsilon_{1_x}) = \rho Q[-\upsilon_2 \sin 30° - (0)]$

$R_x = -\rho Q\upsilon_2 \sin 30° = -(1.94)(0.418)(25) \sin 30°$

$R_x = -10.13$ lb = **10.13 lb to right**

$R_y = \rho Q(\upsilon_{2_y} - \upsilon_{1_y}) = \rho Q[\upsilon_2 \cos 30° - (-\upsilon_1)]$

$R_y = \rho Q[\upsilon_2 \cos 30° + \upsilon_1] = (1.94)(0.418)[25 \cos 30° + 25] =$ **37.79 lb up**

16.6 $Q = A\upsilon = (2.95\text{ in}^2)(22.0\text{ ft/s})(1\text{ ft}^2/144\text{ in}^2)$
$= 0.451\text{ ft}^3/\text{s}$

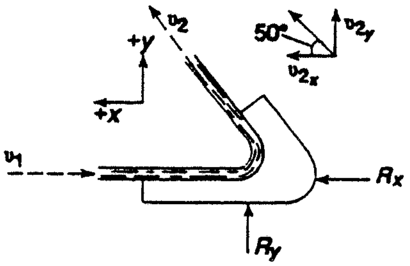

$R_x = \rho Q(\upsilon_{2_x} - \upsilon_{1_x}) = \rho Q[\upsilon_2 \cos 50° - (-\upsilon_1)]$

$R_x = \rho Q[\upsilon_2 \cos 50° + \upsilon_1]$; but $\upsilon_2 = \upsilon_1$

$R_x = \rho Q\upsilon_1[\cos 50° + 1]$

$R_x = \dfrac{1.88\text{ lb}\cdot\text{s}^2}{\text{ft}^4} \times \dfrac{0.451\text{ ft}^3}{\text{s}} \times \dfrac{22.0\text{ ft}}{\text{s}} \times 1.643$

$=$ **30.6 lb**

$R_y = \rho Q(\upsilon_{2_y} - \upsilon_{1_y}) = \rho Q[\upsilon_2 \sin 50° - 0] = (1.88)(0.451)(22 \sin 50°) =$ **14.3 lb**

16.7 $Q = A\upsilon = \dfrac{\pi(0.10\text{ m})^2}{4} \times \dfrac{15\text{ m}}{\text{s}} = 0.118\text{ m}^3/\text{s}$

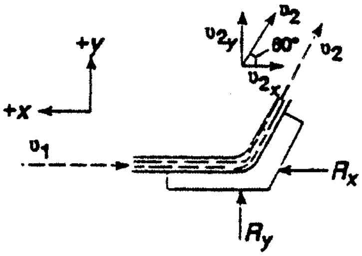

$R_x = \rho Q[\upsilon_{2_x} - \upsilon_{1_x}] = \rho Q[-\upsilon_2 \cos 60° - (-\upsilon_1)]$

$R_x = \rho Q\upsilon_1[1 - \cos 60°]$

$R_x = \dfrac{988\text{ kg}}{\text{m}^3} \times \dfrac{0.118\text{ m}^3}{\text{s}} \times \dfrac{15\text{ m}}{\text{s}} \times [0.5]$

$= \dfrac{873\text{ kg}\cdot\text{m}}{\text{s}^2} =$ **873 N**

$R_y = \rho Q[\upsilon_{2_y} - \upsilon_{1_y}] = \rho Q[\upsilon_2 \sin 60° - 0] = (988)(0.118)(15)(\sin 60°) =$ **1512 N**

16.8 $Q = A_1 \upsilon_1 = \dfrac{\pi(1.00\text{ in})^2}{4} \times \dfrac{\text{ft}^2}{144\text{ in}^2} \times \dfrac{30\text{ ft}}{\text{s}} = \dfrac{0.1636\text{ ft}^3}{\text{s}}$

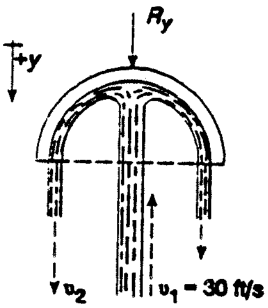

$\upsilon_2 = \dfrac{Q}{A_2} = \dfrac{0.1636\text{ ft}^3 \; 144\text{ in}^2/\text{ft}^2}{\text{s}\;\pi(4.00^2 - 3.80^2)\text{ in}^2/4} = \dfrac{19.23\text{ ft}}{\text{s}}$

$R_y = \rho Q\left(\upsilon_{2_y} - \upsilon_{1_y}\right)$

$R_y = \dfrac{1.88\text{ lb-s}^2}{\text{ft}^4} \times \dfrac{0.1636\text{ ft}^3}{\text{s}}[19.23 - (-30)]\dfrac{\text{ft}}{\text{s}}$ = **15.14 lb**

16.9 $R_y = 550\text{ N} = 550\text{ kg·m/s}^2 = \rho Q\left(\upsilon_{2_y} - \upsilon_{1_y}\right)$

$= \rho A_1 \upsilon_1(0 - (-\upsilon_1)) = \rho A_1 \upsilon_1^2$

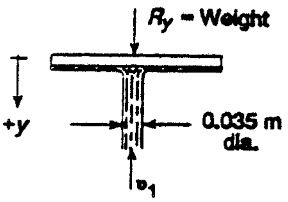

$\upsilon_1 = \sqrt{\dfrac{R_y}{\rho A_1}} = \sqrt{\dfrac{550\text{ kg·m/s}^2}{(900\text{ kg/m}^3)(9.62 \times 10^{-4}\text{ m}^2)}}$ = **25.2 m/s**

$A_1 = \dfrac{\pi(0.035\text{ m})^2}{4} = 9.62 \times 10^{-4}\text{ m}^2$

16.10 $R_{x_1} = \rho Q\left(\upsilon_{2_x} - \upsilon_{1_x}\right) = \rho A \upsilon_1[0 - (-\upsilon_1)] = \rho A_1 \upsilon_1^2$

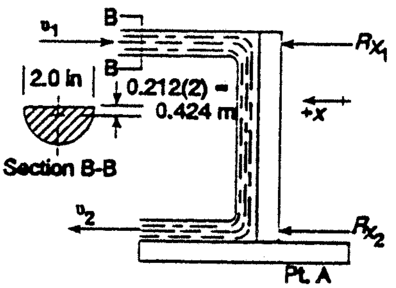

$A_1 = \dfrac{1}{2}\left[\dfrac{\pi(2.0\text{ in})^2}{4} \times \dfrac{\text{ft}^2}{144\text{ in}^2}\right] = 0.0109\text{ ft}^2$

$R_{x_1} = \dfrac{1.94\text{ lb·s}^2}{\text{ft}^4} \times 0.0109\text{ ft}^2 \times \left(\dfrac{40.0\text{ ft}}{\text{s}}\right)^2$

= **33.9 lb**

$R_{x_2} = \rho Q\left(\upsilon_{2_x} - \upsilon_{1_x}\right) = \rho Q(\upsilon_2 - 0) = \rho Q \upsilon_2$

Assume $\upsilon_2 = \upsilon_1$, $A_2 = A_1$

$R_{x_2} = \rho A \upsilon_1^2$ = **33.9 lb**

$M_{1_A} = R_{x_1}(4.00 - 0.424)\text{in} = (33.9\text{ lb})(3.576\text{ in})$ = **121 lb·in**

Moment due to R_{x_2} is small–depends on shape of leaving stream.

16.11 $Q = 100\text{ gal/min} \times \dfrac{1\text{ ft}^3/\text{s}}{449\text{ gal/min}} = 0.223\text{ ft}^3/\text{s}$: $\upsilon_1 = \dfrac{Q}{A} = \dfrac{0.223\text{ ft}^3/\text{s}}{0.0060\text{ ft}^2} = 37.1\text{ ft/s}$

Assume all fluid strikes vane and is deflected perpendicular to incoming stream.

$R_x = \rho Q\left(\upsilon_{2_x} - \upsilon_{1_x}\right) = \rho Q[0 - (-\upsilon_1)] = \rho Q \upsilon_1$

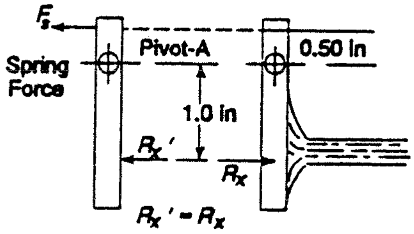

$R_x = \dfrac{1.94\text{ lb·s}^2}{\text{ft}^4} \times \dfrac{0.223\text{ ft}^3}{\text{s}} \times \dfrac{37.1\text{ ft}}{\text{s}} = 16.0\text{ lb}$

R_x is force exerted by vane on water

R_x' is force exerted by water on vane

$\Sigma M_A = 0 = F_S(0.5\text{ in}) - R_x'(1.0\text{ in})$

$F_S = R_x' \dfrac{1.0}{0.5} = 2R_x' = 2(16.0\text{ lb})$ = **32.0 lb**

16.12 $R_x = \rho Q\left[\upsilon_{2_x} - \upsilon_{1_x}\right] = \rho A\upsilon_2[\upsilon_2 - 0] = \rho A\upsilon_2^2$

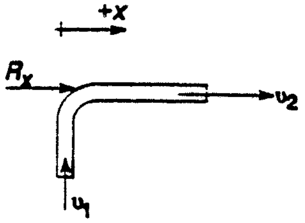

$$A = \frac{\pi(4.0\text{ in})^2}{4} \times \frac{\text{ft}^2}{144\text{ in}^2} = 0.0873\text{ ft}^2$$

$$R_x = \frac{1.94\text{ lb}\cdot\text{s}^2}{\text{ft}^4} \times 0.0873\text{ ft}^2 \times (60\text{ ft/s})^2$$

$= 609$ lb acting on water jet

Force on boat is reaction to R_x acting toward left. ←

16.13 $\dfrac{p_1}{\gamma} + \dfrac{\upsilon_1^2}{2g} - h_L = \dfrac{p_2}{\gamma} + \dfrac{\upsilon_2^2}{2g}$

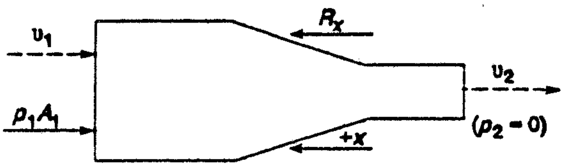

$$\upsilon_1 = \upsilon_2 \cdot \frac{A_2}{A_1} = 80 \cdot \frac{0.0218}{0.0873}$$

$= 20$ ft/sec

$$p_1 = \gamma\left[\frac{\upsilon_2^2}{2g} - \frac{\upsilon_1^2}{2g} + h_L\right] = \gamma\left[\frac{\upsilon_2^2}{2g} - \frac{\upsilon_1^2}{2g} + \frac{0.12\upsilon_2^2}{2g}\right] = \gamma\left[\frac{1.12\upsilon_2^2 - \upsilon_1^2}{2g}\right]$$

$$p_1 = \frac{62.4\text{ lb}}{\text{ft}^3}\left[\frac{1.12(80)^2 - (20)^2}{64.4}\right]\text{ft} = 6550\text{ lb/ft}^2$$

$$R_x - p_1A_1 = \rho Q\left(\upsilon_{2_x} - \upsilon_{1_x}\right) = \rho Q(-\upsilon_2 - (-\upsilon_1)) = \rho Q(\upsilon_1 - \upsilon_2)$$

$$R_x = \rho Q(\upsilon_1 - \upsilon_2) + p_1A_1 = (1.94)\underbrace{(0.0218)(80)}_{A\upsilon}(20 - 80) + (6550)(0.0873) = -203 + 571$$

$= \mathbf{368\ lb}$

16.14 $\upsilon_1 = \dfrac{Q}{A_1} = \dfrac{0.025\text{ m}^3\text{/s}}{7.538 \times 10^{-3}\text{m}^2} = 3.32$ m/s

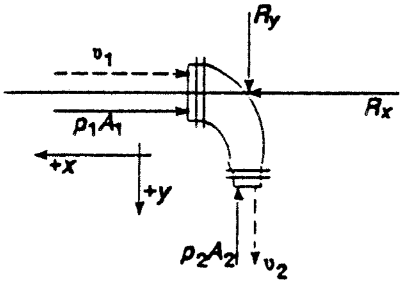

$$\upsilon_2 = \frac{Q}{A_2} = \frac{0.025\text{ m}^3\text{/s}}{1.945 \times 10^{-3}\text{ m}^2} = 12.85\text{ m/s}$$

$$\frac{p_1}{\gamma} + \frac{\upsilon_1^2}{2g} - h_L = \frac{p_2}{\gamma} + \frac{\upsilon_2^2}{2g}$$

$$p_2 = p_1 + \gamma\left[\frac{\upsilon_1^2 - \upsilon_2^2}{2g} - h_L\right] = p_1 + \gamma\left[\frac{\upsilon_1^2}{2g} - \frac{\upsilon_2^2}{2g} - 3.5\frac{\upsilon_1^2}{2g}\right] = p_1 + \gamma\left[-\frac{\upsilon_2^2}{2g} - 2.5\frac{\upsilon_1^2}{2g}\right]$$

$$p_2 = 825\text{ kPa} + (1.03)(9.81\text{ kN/m}^3)\left[\frac{[-12.85^2 - 2.5(3.32)^2]\text{m}^2\text{/s}^2}{2(9.81\text{ m/s}^2)}\right]$$

$= 825$ kPa $- 99.2$ kPa $= 726$ kPa

$\rho Q\upsilon_1 = (1.03)(1000\text{ kg/m}^3)(0.025\text{ m}^3)(3.32\text{ m/s}) = 85.5\text{ kg·m/s}^2 = 85.5$ N

$\rho Q\upsilon_2 = (1.03)(1000)(0.025)(12.85)\text{N} = 331$ N

$p_1A_1 = (825\ \text{kN/m}^2)(7.538 \times 10^{-3}\ \text{m}^2) = 6.219\ \text{kN} = 6219\ \text{N}$
$p_2A_2 = (726\ \text{kN/m}^2)(1.945 \times 10^{-3}\ \text{m}^2) = 1.412\ \text{kN} = 1412\ \text{N}$

x-direction:

$R_x - p_1A_1 = \rho Q\left(\upsilon_{2_x} - \upsilon_{1_x}\right) = \rho Q(0 - (-\upsilon_1)) = \rho Q\upsilon_1$

$R_x = \rho Q\upsilon_1 + p_1A_1 = 85.5\ \text{N} + 6219\ \text{N} = \mathbf{6305\ N}$

y-direction:

$R_y - p_2A_2 = \rho Q\left(\upsilon_{2_y} - \upsilon_{1_y}\right) = \rho Q(\upsilon_2 - 0) = \rho Q\upsilon_2$

$R_y = \rho Q\upsilon_2 + p_2A_2 = 331\ \text{N} + 1412\ \text{N} = \mathbf{1743\ N}$

16.15 $Q = 500\ \text{gal/min} \times \dfrac{1\ \text{ft}^3/\text{sec}}{449\ \text{gal/min}}$
$= 1.114\ \text{ft}^3/\text{sec}$

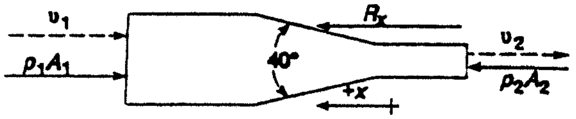

$\upsilon_1 = \dfrac{Q}{A_1} = \dfrac{1.114\ \text{ft}^3/\text{sec}}{0.2006\ \text{ft}^2} = 5.55\ \text{ft/sec}$ $\quad A_1 = 0.2006\ \text{ft}^2 = 28.89\ \text{in}^2$

$A_2 = 0.05132\ \text{ft}^2 = 7.39\ \text{in}^2$

$\upsilon_2 = \dfrac{Q}{A_2} = \dfrac{1.114\ \text{ft}^3/\text{sec}}{0.05132\ \text{ft}^2} = 21.7\ \text{ft/sec}$ $\quad D_1/D_2 = 0.5054/0.2557 = 1.98; K = 0.043$

From Section 10.8, $h_L = K\dfrac{\upsilon_2^2}{2g} = 0.043\dfrac{(21.7)^2}{64.4} = 0.314\ \text{ft}$

$$\frac{p_1}{\gamma} + \frac{\upsilon_1^2}{2g} - h_L = \frac{p_2}{\gamma} + \frac{\upsilon_2^2}{2g} \therefore p_2 = p_1 + \gamma\left[\frac{\upsilon_1^2 - \upsilon_2^2}{2g} - 0.314\right]$$

$$p_2 = 125 + \frac{62.4\ \text{lb}}{\text{ft}^3}\left[\frac{(5.55)^2 - (21.7)^2}{64.4} - 0.314\right]\text{ft}\,\frac{1\ \text{ft}^2}{144\ \text{in}^2} = 125 - 3.10 = 121.9\ \text{psig}$$

$\Sigma F_x = R_x + p_2A_2 - p_1A_1 = \rho Q\left(\upsilon_{2_x} - \upsilon_{1_x}\right) = \rho Q(-\upsilon_2 - (-\upsilon_1)) = \rho Q(\upsilon_1 - \upsilon_2)$

$R_x = \rho Q(\upsilon_1 - \upsilon_2) - p_2A_2 + p_1A_1$
$= (1.94)(1.11)(5.55 - 21.7) - (121.9)(7.39) + (125)(28.89)$
$R_x = -34.9 - 900 + 3611 = \mathbf{2676\ lb}$

16.16 Find p_1 ($p_2 = 0$, $\upsilon_1 = \upsilon_2$, $z_1 = z_2$)

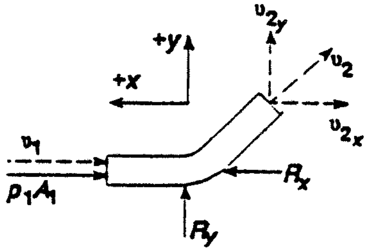

$$\frac{p_1}{\gamma} - h_L = 0;\ p_1 = \gamma h_L = \gamma f_T \frac{L_e}{D}\frac{\upsilon^2}{2g}$$

$\upsilon = Q/A = 6.5/0.3174 = 20.45$ ft/sec

$$N_R = \frac{\upsilon D}{\gamma} = \frac{(20.45)(0.6354)}{9.15\times10^{-6}} = 1.42 \times 10^6$$

$f_T = 0.014$ (Table 10.5); $L_e/D = 16$ (Table 10.4)

$p_1 = \gamma h_L = (62.2)(0.014)(16)(20.45)^2/64.4 = 90.5\ \text{lb/ft}^2$

x-direction:

$R_x - p_1A_1 = \rho Q\left(\upsilon_{2_x} - \upsilon_{1_x}\right) = \rho Q(-\upsilon \sin 45° - (-\upsilon_1)) = \rho Q\upsilon(1 - \sin 45°)$

$R_x = \rho Q\upsilon(1 - \sin 45°) + p_1A_1 = (1.93)(6.5)(20.45)(0.293) + (90.5)(0.3174) = \mathbf{103.9\ lb}$

y-direction:

$R_y = \rho Q\left(\upsilon_{2_y} - \upsilon_{1_y}\right) = \rho Q(\upsilon_2 \cos 45° - 0) = (1.93)(6.5)(20.45)(0.707) = \mathbf{182\ lb}$

16.17 $$\upsilon = \frac{Q}{A} = \frac{0.125\ \text{m}^3/\text{s}}{1.864\times10^{-2}\ \text{m}^2} = 6.71\ \text{m/s}$$

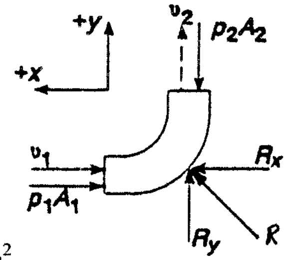

x-direction:

$R_x - p_1A_1 = \rho Q\left(\upsilon_{2_x} - \upsilon_{1_x}\right) = \rho Q(0 - (-\upsilon_1))$

$R_x = \rho Q\upsilon_1 + p_1A_1$

$$= \frac{1000\ \text{kg}}{\text{m}^3}\times\frac{0.125^{\ 3}}{\text{s}}\times\frac{6.71\ \text{m/s}}{\text{s}} + \frac{1050\ \text{kN}}{\text{m}^2} \times 1.864 \times 10^{-2}\ \text{m}^2$$

$$R_x = 838\ \text{kg·m/s}^2 + 19.57\ \text{kN} = 838\ \text{N} \times \frac{1\ \text{kN}}{10^3\ \text{N}} + 19.57\ \text{kN} = \mathbf{20.41\ kN}$$

└─ N ─┘

y-direction:

$R_y - p_2A_2 = \rho Q\left(\upsilon_{2_y} - \upsilon_{1_y}\right) = \rho Q(\upsilon_2 - 0)$

$R_y = \rho Q\upsilon_2 + p_2A_2 = 0.838\ \text{kN} + 19.57\ \text{kN} = \mathbf{20.41\ kN}$

$R = \sqrt{R_x^2 + r_\upsilon^2}$

$R = 28.9$ kN @ 45°

16.18 $Q = 2000$ L/min × 16.67 × 10^{-6} m³/s/1 L/min = 0.0333 m³/s

$\upsilon = Q/A = 0.0333\ \text{m}^3/\text{s}/7.419 \times 10^{-3}\ \text{m}^2 = 4.49$ m/s

$\Sigma F_x = \rho Q\left(\upsilon_{2_x} - \upsilon_{1_x}\right) = \rho Q(\upsilon_2 - (-\upsilon_1)) = 2\rho Q\upsilon$

$\Sigma F_x = R_x - p_1A_1 - p_2A_2 = R_x - 2p_1A_1$

Then $R_x - 2p_1A_1 = 2\rho Q\upsilon$

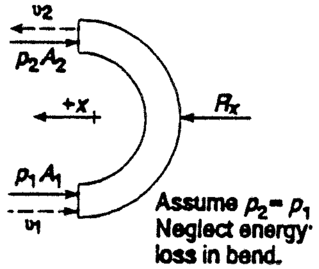

$R_x = 2\rho Q\upsilon + 2p_1A_1$

$$= 2(0.89)\frac{(1000\ \text{kg})}{\text{m}^3}\times\frac{0.0333\,\text{m}^3}{\text{s}}\times\frac{4.49\ \text{m}}{\text{s}} + 2\times\frac{2.0\times10^6\ \text{N}}{\text{m}^2}\times 7.419\times10^{-3}\text{m}^2$$

$$= \frac{267\ \text{kg·m}}{\text{s}^2} + 29.68 \times 10^3\ \text{N} = 267\ \text{N} + 29.68 \times 10^3\ \text{N} = 0.267\ \text{kN} + 29.68\ \text{kN}$$

$\mathbf{R_x = 29.95\ kN}$

16.19 $\upsilon_1 = \upsilon_2 = \upsilon$

$$\upsilon = \frac{Q}{A} = \frac{0.12\ \text{m}^3/\text{s}}{1.670\times10^{-2}\ \text{m}^2} = 7.19\ \text{m/s}$$

$$p_1A_1 = p_2A_2 = \frac{275\ \text{kN}}{\text{m}^2} \times 1.670 \times 10^{-2}\ \text{m}^2 = 4.59\ \text{kN}$$

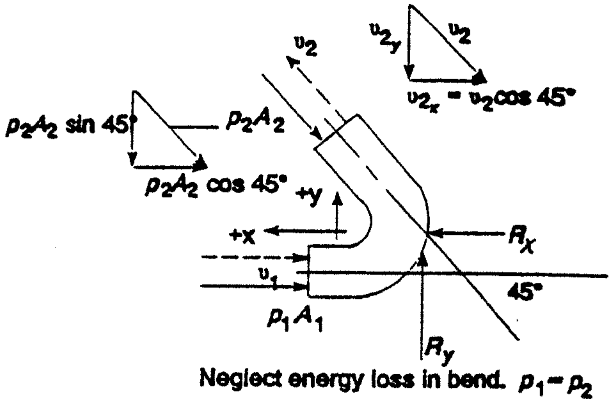

x-direction:

$R_x - p_1A_1 - p_2A_2 \cos 45° = \rho Q\left(\upsilon_{2_x} - \upsilon_{1_x}\right)$

$R_x - p_1A_1(1 + \cos 45°) = \rho Q(\upsilon_2 \cos 45° - (-\upsilon_1))$

$R_x - p_1A_1(1 + \cos 45°) = \rho Q\upsilon(1 + \cos 45°)$

$R_x = \rho Q\upsilon(1 + \cos 45°) + p_1A_1(1 + \cos 45°)$

$$\rho Q\upsilon = \frac{1590\ \text{kg}}{\text{m}^3}\times\frac{0.12\ \text{m}^3}{\text{s}}\times\frac{7.19\ \text{m}}{\text{s}} = \frac{1.37\times10^3\ \text{kg}\cdot\text{m}}{\text{s}^2} = 1.37\ \text{kN}$$

$R_x = 1.37\ \text{kN}(1.707) + 4.59\ \text{kN}(1.707) = \mathbf{10.17\ kN}$

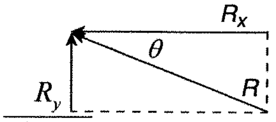

$R = R_x^2 + R_y^2 = 11.0\ \text{kN}$

$\theta = \tan^{-1}\dfrac{R_y}{R_x} = 22.3°$

y-direction:

$R_y - p_2A_2 \sin 45° = \rho Q\left(\upsilon_{2_y} - \upsilon_{1_y}\right) = \rho Q(\upsilon_2 \sin 45° - 0) = \rho Q\upsilon \sin 45°$

$R_y = (\rho Q\upsilon + p_2A_2) \sin 45° = (1.37\ \text{kN} + 4.59\ \text{kN})(0.707) = \mathbf{4.18\ kN}$

16.20 $Q = A\upsilon = (3.142 \times 10^{-2}\ \text{m}^2)(30\ \text{m/s}) = 0.943\ \text{m}^3/\text{s}$

a. **x-direction:**

$R_x = \rho Q\left(\upsilon_{2_x} - \upsilon_{1_x}\right) = \rho Q(\upsilon_2 - (-\upsilon_1 \cos 15°))$

$R_x = \rho Q\upsilon(1 + \cos 15°) = 1.966\rho Q\upsilon$

$$R_x = (1.966)\left(\frac{1000\ \text{kg}}{\text{m}^3}\right)\left(\frac{0.943\ \text{m}^3}{\text{s}}\right)\left(\frac{30\ \text{m}}{\text{s}}\right)$$

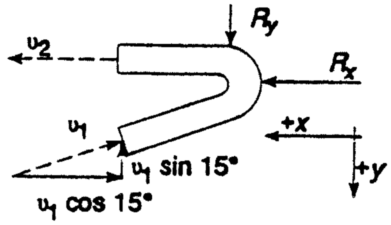

$R_x = 55.6 \times 10^3\ \text{kg·m/s}^2 = 55.6\ \text{kN}$ = Force of car on water. ←

Force on car = 55.6 kN →

y-direction:

$R_y = \rho Q\left(\upsilon_{2_y} - \upsilon_{1_y}\right) = \rho Q(0 - (-\upsilon_1 \sin 15°)) = \rho Q\upsilon \sin 15°$

$R_y = (1000)(0.943)(30)(0.259) = 7.32 \times 10^3\ \text{kg·m/s}^2 = 7.32\ \text{kN}$ = Force on water ↓

Force on car = 7.32 kN ↑

b. Because the inlet jet acts at an angle to the x-y directions, we compute its components: $v_{1x} = v_1 \cos(15°) = (30 \text{ m/s})(0.966) = 28.98$ m/s: $v_{1y} = v_1 \sin(15°) = 30 \text{ m/s})(0.259) = 7.76$ m/s

Only v_{1x} is affected by the moving vane. Then $v_{e/x} = v_{1x} - 12 \text{ m/s} = 16.98$ m/s. $v_{e1y} = v_{1y} = 7.76$ m/s. The magnitude of the resultant effective velocity is:

$$|v_{e1y}| = \sqrt{(16.98)^2 + (7.76)^2} = 18.67 \text{ m/s}$$

The total effective mass flow rate into the vane, M_e, is,

$M_e = \rho Q_e = \rho A v_{e1} = (1000 \text{ kg/m}^3)(3.142 \times 10^{-2} \text{ m}^2)(18.67 \text{ m/s}) = 586.6$ kg/s

The velocity, v_{e1}, acts at an angle α, with respect to the horizontal, where

$\alpha = \text{Tan}^{-1}(7.76)/16.98) = 24.58°$

Only the component of v_{e1} acting parallel to the vane is maintained as the jet travels around the vane.

This component is computed using β, the difference between α and the angle of the vane inlet.

$\beta = 24.58° - 15° = 9.58°$

Then, $v_{e1(\text{par})} = (v_{e1})\cos(9.58°) = (18.67 \text{ m/s})(0.986) = 18.41$ m/s

This velocity remains undiminished as the jet travels around the vane. Then $v_{e2} =$ 18.41 m/s to the left.

Force in x-direction: $R_x = M_e(\Delta v_{ex}) = M_e(v_{e2x} - v_{e1x}) = (586.6 \text{ kg/s})[18.41 - (-16.98)]\text{m/s}$ = **20.86 kN**

Force in y-direction: $R_y = M_e(\Delta v_{ey}) = M_e(v_{e2y} - v_{e1y}) = (586.6 \text{ kg/s})[0 - (-7.76)]\text{m/s}$ = **4.55 kN**

16.21 $R_x = \rho Q(\upsilon_{2_x} - \upsilon_{1_x}) = \rho A \upsilon_1(0 - (-\upsilon_1)) = \rho A \upsilon_1^2$ ①

Weight of carton = $w_c = mg = \dfrac{0.10 \text{ kg} \cdot 9.81 \text{ m}}{\text{s}^2} = 0.981$ N

$\Sigma M_A = R_x(75 \text{ mm}) - w_c(15 \text{ mm}) = 0$ Impending tipping

$R_x = w_c \dfrac{15}{75} = 0.981 N \dfrac{15}{75} = 0.196$ N

From ①, $\upsilon_1 = \sqrt{\dfrac{R_x}{\rho A}}$

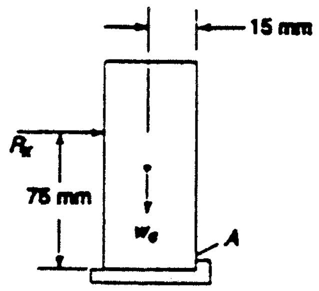

$A = \pi(0.010 \text{ m})^2/4 = 7.85 \times 10^{-5} \text{ m}^2$

$$\upsilon_1 = \sqrt{\frac{0.196 \text{ kg}\cdot\text{m/s}^2}{(1.20 \text{ kg/m}^3)(7.85 \times 10^{-5} \text{ m}^2)}} = \mathbf{45.6 \text{ m/s}}$$

16.22 $R_x = \rho Q(\upsilon_{2_x} - \upsilon_{1_x}) = \rho A \upsilon_1(0 - (-\upsilon_1)) = \rho A \upsilon_1^2$

$$R_x = \frac{1.20 \text{ kg}}{\text{m}^3} \times \frac{\pi(0.015 \text{ m})^2}{4} \times \frac{(0.35 \text{ m/s})^2}{1} = \frac{2.60 \times 10^{-5} \text{ kg}\cdot\text{m}}{\text{s}^2} = \mathbf{2.6 \times 10^{-5} \text{ N}}$$

16.23 Let $\upsilon_{1e} = \upsilon_1 - \upsilon_b$

└ Velocity of Blade

└ Velocity of Air

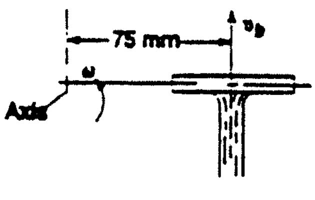

$$\upsilon_b = R\omega = (0.075 \text{ m}) \times \frac{40 \text{ rev}}{\text{min}} \times \frac{2\pi \text{ rad}}{\text{rev}} \times \frac{1 \text{ min}}{60 \text{ s}}$$

$= 0.314$ m/s

$\upsilon_e = 0.35$ m/s $- 0.314$ m/s $= 0.0358$ m/s

$$R_x = \rho A \upsilon_e^2 = (1.20)\frac{\pi(0.015)^2}{4}(0.0358)^2 = \mathbf{2.72 \times 10^{-7}\ N}$$

16.24 $R_x = \rho Q(\upsilon_{2_x} - \upsilon_{1_x})$

$R_x = \rho Q(0 - (-\upsilon_1 \sin 45°))$

$R_x = \rho Q\upsilon_1 \sin 45°$

$= \rho(A\upsilon_1)\upsilon_1 \sin 45°$

$R_x = \rho A\upsilon_1^2 \sin 45°$

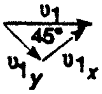

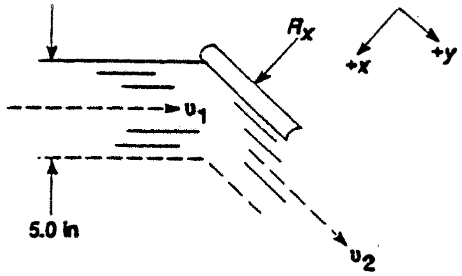

Compute R_x for a 20.0 in length of louver, as shown in Fig. 16.19.

$A = (5 \text{ in})(20.0 \text{ in})(1 \text{ ft}^2/144 \text{ in}^2)$

$= 0.694 \text{ ft}^2$

$$R_x = \frac{2.06\times10^{-3}\ \text{lb}\cdot\text{s}^2}{\text{ft}^4} \times 0.694 \text{ ft}^2 \times (10.0 \text{ ft/s})^2 \times \sin 45° = 0.101 \text{ lb}$$

Assume R_x acts at middle of louver, 2.50 in from pivot

Moment $= R_x(2.5) = 0.101$ lb(2.5 in) $=$ **0.253 lb-in**

16.25 See Problem 16.24:

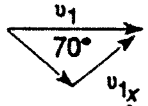

$R_x = \rho A\upsilon_1^2 \sin 70° = (2.06 \times 10^{-3})(0.694)(10.0)^2 \sin 70° = 0.1345$ lb

Moment $= R_x(2.5) = (0.1345 \text{ lb})(2.5 \text{ in}) =$ **0.336 lb-in**

16.26 See analysis—Problem 16.24: $R_x = \rho A\upsilon_1^2 \sin(90 - \theta) = \rho A\upsilon_1^2 \cos\theta$

$R_x = (2.06 \times 10^{-3})(0.417)(10.0)^2 \cos\theta = 0.143 \cos\theta$; Moment $= R_x(2.5 \text{ in})$

θ	R_x(lb)	M(lb·in)
10	0.141	0.352
20	0.134	0.336
30	0.124	0.310
40	0.110	0.274
50	0.0920	0.230
60	0.0715	0.179
70	0.0489	0.122
80	0.0248	0.062
90	0.0	0.0

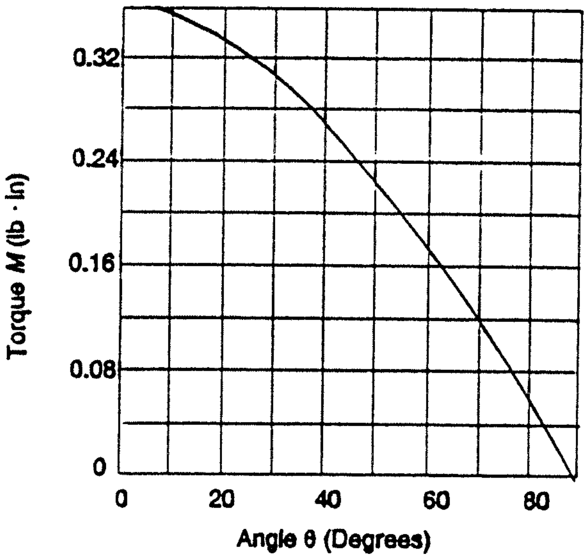

16.27 Maximum $F_f = \mu W = 0.60W$

Sliding is impending when $R_x = F_f$

$R_x = \rho Q(\upsilon_{2_x} - \upsilon_{1_x}) = \rho A\upsilon_1(0 - (-\upsilon_1)) = \rho A\upsilon_1^2$

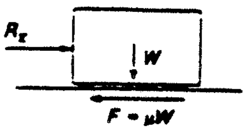

Then $W = \dfrac{R_x}{0.6} = \dfrac{\rho A \upsilon_1^2}{0.6}$

$$W = \frac{2.40\times10^{-3}\ \text{lb}\cdot\text{s}^2}{\text{ft}^4}\times\frac{\pi(1.5\ \text{in})^2}{4}\times\frac{\text{ft}^2}{144\ \text{in}^2}\times\frac{(25.0\ \text{ft/s})^2}{0.6} = 0.0307\ \text{lb}$$

16.28 See Prob. 16.27:

$$W = \frac{\rho A\upsilon_1^2}{0.6} = \frac{1.94\ \text{lb}\cdot\text{s}^2}{\text{ft}^4}\times\frac{\pi(0.75\ \text{in})^2}{4}\times\frac{(25.0\ \text{ft/s})^2}{144\ \text{in}^2/\text{ft}^2}\times\frac{1}{0.6} = 6.20\ \text{lb}$$

16.29 $R_x = M(\Delta v_2) = M(v_{2x} - v_{1x})$: Where $M = \rho A v$

$A = \pi D^2/4 = \pi(0.0075\ \text{m})^2/4 = 4.418 \times 10^{-5}\ \text{m}^2$

$M = \rho A v = (1000\ \text{kg/m}^3)(4.418 \times 10^{-5}\ \text{m}^2)(25\ \text{m/s}) = 1.105\ \text{kg/s}$

$v_{1x} = v_1 \cos(10°) = (25\ \text{m/s})(0.985) = 24.62\ \text{m/s}$;

$v_{1y} = v_1 \sin(10°) = (25\ \text{m/s})(0.174) = 4.34\ \text{m/s}$

$v_2 = v = 25\ \text{m/s}$;

$v_{2x} = v_2 \cos(60°) = (25\ \text{m/s})(0.5) = 12.5\ \text{m/s}$; $v_{2y} = v_2 \sin(60°)$
$= (25\ \text{m/s})(0.0866) = 21.65\ \text{m/s}$

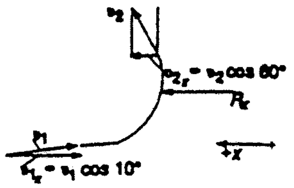

Force in the x-direction: $R_x = M(\Delta v_x) = M(v_{2x} - v_{1x})$
$= (1.105\ \text{kg/s})[12.5 - (-24.62)]\text{m/s} =$ **41.0 N**

Force in the y-direction: $R_y = M(\Delta v_y) = M(v_{2y} - v_{1y})$
$= (1.105\ \text{kg/s})[21.65 - 4.34]\text{m/s} =$ **19.1 N**

16.30 Compute the force on one blade when the turbine wheel is rotating and has a tangential velocity of 10 m/s.

Method: See vector diagram on next page. Law of sines and law of cosines used.

1. Compute the velocity relative to the blade v_{R1} for the inlet.
2. The magnitude of this velocity remains undiminished as the jet traverses the blade.
3. The relative velocity rotates 110° as it traverses the blade.
4. Resolve v_{R1} and v_{R2} into x and y components.
5. Compute the effective mass flow rate $M_e = \rho Q_e = \rho A_j v_R$.
6. Compute reaction forces: $R_x = M_e(v_{R2x} - v_{R1x})$ and $R_y = M_e(v_{R2y} - v_{R1y})$

Results:

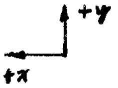

$v_{R1} = 15.25$ m/s **↗16.54°** ; $v_{R2} = 15.25$ m/s **53.46°↖**

$v_{R1x} = 14.62$ m/s →; $v_{R1y} = 4.34$ m/s ↑; $V_{R2x} = 9.077$ m/s ←; $v_{R2y} = 12.25$ m/s^

$M_e = \rho Q_e = \rho A_j v_R = (1000\ \text{kg/m}^3)[\pi(0.0075\ \text{m})^2/4](15.25\ \text{m/s}) = 0.674\ \text{kg/s}$

$R_x = M_e(V_{R2x} - V_{R1x}) = (0.674\ \text{kg/s})(9.077 - (-14.62))\ \text{m/s} = 15.97\ \text{kg m/s}^2 = 15.97\ \text{N}$ ←

$R_y = M_e(V_{R2y} - V_{R1y}) = (0.674)(12.25 - 4.34) = 5.33\ \text{N}$↑

$$\text{Rotational speed} = \omega = \frac{\upsilon_t}{r} = \frac{10.0\ \text{m}}{\text{s}(0.20\ \text{m})}\times\frac{\text{rev}}{2\pi\ \text{rad}}\times\frac{60\ \text{s}}{\text{min}} = 477\ \text{rpm}$$

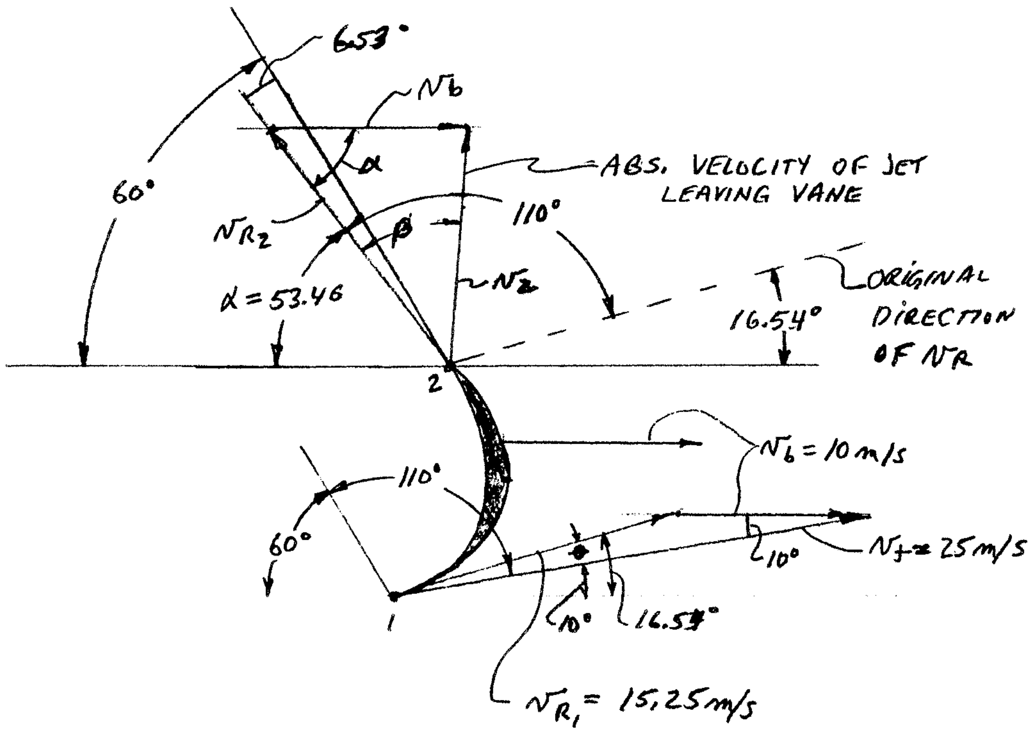

Vector diagram for Problem 16.30

V_j = Velocity of water jet
v_R = Velocity relative to blade
v_b = Velocity of blade

Assume $|v_{R1}| = |v_{R2}|$ and v_R vector is rotated 110° from inlet to outlet

Problem 16.31			Forces on rotating turbine wheel				
v Blade (m/s)	v_{R1} (m/s)	ϕ (°)	v_{R2} (m/s)	α (°)	M_e (kg/s)	R_x (N)	R_y (N)
0	25.00	10.00	25.00	60.00	1.105	41.00	19.12
5	20.09	12.48	20.09	57.52	0.888	27.00	11.20
10	15.25	16.54	15.25	53.46	0.674	15.97	5.33
15	10.55	24.29	10.55	45.71	0.466	7.92	1.50
20	6.34	43.22	6.34	26.78	0.280	2.88	–0.42
25	4.36	95.00	4.36	–25.00	0.193	0.69	–1.19

R_x is the reaction force exerted by the blade on the water; positive R_x acts to the left
Then the force exerted by the water on the blade acts to the right, accelerating the blade
Positive R_y acts radially outward
Then the force exerted by the water on the blade acts radially inward toward the center of rotation
When R_y is negative, the net radial force on the blade is outward.

CHAPTER SEVENTEEN

DRAG AND LIFT

17.1 $F_D = C_D\left(\frac{1}{2}\rho\upsilon^2\right)A$: $A = D \times L = (0.025\text{ m})(1\text{ m}) = 0.025\text{ m}^2$

a. Water at 15°C: $\rho = 1000\text{ kg/m}^3$; $\nu = 1.15 \times 10^{-6}\text{ m}^2/\text{s}$

$N_R = \frac{\upsilon D}{\nu} = \frac{(0.15)(0.025)}{1.15\times10^{-6}} = 3.26 \times 10^3$; Then $C_D = 0.90$ (Fig. 17.3)

$F_D = (0.90)(0.50)(1000\text{ kg/m}^3)(0.15\text{ m/s})^2(0.025\text{ m}^2) = 0.253\text{ kg·m/s}^2 = \mathbf{0.253\text{ N}}$

b. Air at 10°C: $\rho = 1.247\text{ kg/m}^3$; $\nu = 1.42 \times 10^{-5}\text{ m}^2/\text{s}$

$N_R = \frac{\upsilon D}{\nu} = \frac{(0.15)(0.025)}{1.42\times10^{-5}} = 2.64 \times 10^2$; Then $C_D = 1.30$

$F_D = (1.30)(0.5)(1.247\text{ kg/m}^2)(0.15\text{ m/s})^2(0.025\text{ m}^2) = \mathbf{4.56 \times 10^{-4}\text{ N}}$

17.2 Assume a smooth sphere

a. $\upsilon = \frac{15\text{ km}}{\text{h}} \times \frac{10^3\text{ m}}{\text{km}} \times \frac{1\text{ h}}{3600\text{ s}} = 4.17\text{ m/s}$ | $A = \frac{\pi D^2}{4} = \frac{\pi(2.0)^2}{4} = 3.142\text{ m}^2$

$N_R = \frac{\upsilon D}{\nu} = \frac{(4.17)(2.0)}{1.33\times10^{-5}} = 6.27 \times 10^5$; Then $C_D = 0.20$ (Fig. 17.3)

$F_D = C_D\left(\frac{1}{2}\rho\upsilon^2\right)A = (0.20)(0.5)(1.292\text{ kg/m}^3)(4.17\text{ m/s})^2(3.142\text{ m}^2) = 7.06\text{ N}$

Similarly for (b), (c), and (d):

	υ(km/h)	υ(m/s)	N_R	C_D	F_D(N)
(a)	15	4.17	6.27×10^5	0.20	**7.06**
(b)	30	8.33	1.25×10^6	0.20	**28.16**
(c)	60	16.67	2.50×10^6	0.20	**112.7**
(d)	120	33.33	5.01×10^6	0.20	**450.7**
(e)	160	44.44	6.68×10^6	0.20	**801.9**

17.3 For equilibrium $F_D = w - F_b$ at terminal velocity

$w = \gamma V = \gamma\pi D^3/6 = (26.6\text{ kN/m}^3)(\pi(0.075\text{ m})^3/6) = 5.88\text{ N}$

$F_b = \gamma_f V = (9.42\text{ kN/m}^3)(\pi(0.075\text{ m})^3/s) = 2.08\text{ N}$

$$F_D = w - F_b = 5.88\text{ N} - 2.08\text{ N} = 3.80\text{ N} = C_D\left(\frac{1}{2}\rho\upsilon^2\right)A$$

$$F_D = C_D(0.5)(960)(\upsilon^2)(4.418\times10^{-3}) = 2.12C_D\upsilon^2$$

Then $\upsilon = \sqrt{F_D/2.12C_D} = \sqrt{3.80/2.12C_D} = \sqrt{1.79/C_D}$; Assume $C_D = 1.0$; $\upsilon = 1.34$ m/s

Check $N_R = \upsilon D\rho/\mu = (1.34)(0.075)(960)/6.51\times10^{-1} = 1.48\times10^2$; Then $C_D = 0.8$

Recompute $\upsilon =$ **1.50 m/s**; $N_R = 1.65\times10^2$

Summary of results

	w	F_b	F_D	C_D	υ	N_R
a) Cast. oil	5.88 N	2.08 N	3.80 N	0.8	**1.50 m/s**	1.65×10^2
b) Water	5.88 N	2.16 N	3.72 N	0.4	**2.05 m/s**	1.72×10^5
c) Air	5.88 N	5.88 N	5.88 N	0.2	**105 m/s**	5.22×10^5

17.4 $M_A = F_1(7.5\text{ m}) + F_2(4.5\text{ m}) + F_3(1.5\text{ m})$

$F_1, F_2, F_3,$ = Drag forces on pipes

$\upsilon = 150\text{ km/h}\times10^3\text{ m/km}\times1\text{ h/3600 s} = 41.67\text{ m/s}$

$\rho = 1.292\text{ kg/m}^3$

$$\frac{1}{2}\rho\upsilon^2 = (0.5)(1.292\text{ kg/m}^3)(41.67\text{ m/s})^2$$

$$= \frac{1122\text{ kg}\cdot\text{m}}{\text{s}^2(\text{m}^2)} = \frac{1112\text{ N}}{\text{m}^2}$$

$$F_D = C_D\left(\frac{1}{2}\rho\upsilon^2\right)A \quad (C_D \text{ from Fig. 17.3}) \ (A = LD)$$

$$N_R = \frac{\upsilon D}{\nu} = \frac{(41.67)(D)}{1.33\times10^{-5}} = 3.13\times10^6(D)$$

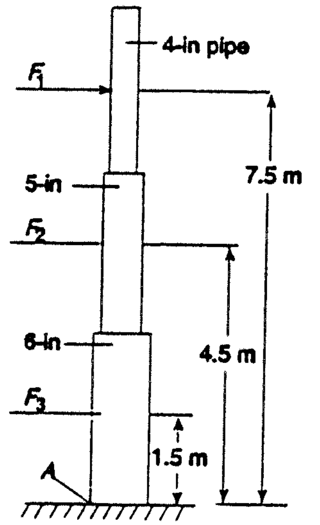

Pipe	D(m)	A(m^2)	N_R	C_D	F(N)	M(N·m)
1	0.1143	0.343	3.58×10^5	0.70	267	2002
2	0.1413	0.424	4.43×10^5	0.40	189	849
3	0.1683	0.505	5.27×10^5	0.25	140	211
						3062 N·m

17.5 Circum. $= \pi D = 225$ mm; $D = 225\text{ mm}/\pi = 71.6$ mm

$A = \pi D^2/4 = \pi(0.0716\text{ m})^2/4 = 4.03\times10^{-3}\text{ m}^2$

$$N_R = \frac{\upsilon D}{\nu} = \frac{(20)(0.0716)}{1.60\times10^{-5}} = 8.95\times10^4;\ \text{then } C_D = 0.45$$

$F_D = C_D\left(\frac{1}{2}\rho\upsilon^2\right)A = (0.45)(0.5)(1.164)(20)^2(4.03\times10^{-3}\text{ m}^2) = 0.42\text{ kg·m/s} =$ **0.42 N**

17.6 F_D = Drag force = F_R = Force on car

$$F_D = C_D\left(\frac{1}{2}\rho\upsilon^2\right)A$$

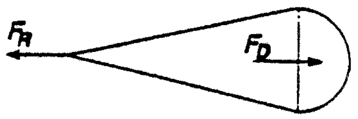

C_D = 1.35 for hemisphere cup (Table 17.1)
υ = 1100 km/h × 10^3 m/km × 1 h/3600 s = 305.6 m/s
$F_D = (1.35)(0.5)(1.204)(305.6)^2(\pi(1.5)^2/4) = 134 \times 10^3$ kg·m/s² = **134 kN**

17.7 $F_D = 800\text{ N} = C_D\left(\frac{1}{2}\rho\upsilon^2\right)A$ at terminal vel.

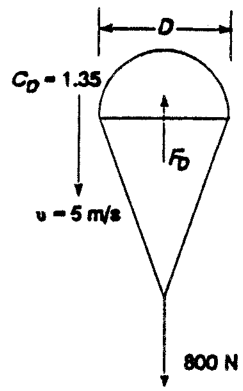

$$A = \frac{2F_D}{C_D\rho\upsilon^2} = \frac{(2)(800\text{ N})\dfrac{1\text{ kg}\cdot\text{m/s}^2}{\text{N}}}{(1.35)(1.127\text{ kg/m}^3)(5\text{ m/s})^2} = 42.1\text{ m}^2 = \pi D^2/4$$

$$D = \sqrt{\frac{4A}{\pi}} = \sqrt{\frac{4(42.1\text{ m}^2)}{\pi}} = \mathbf{7.32\ m}$$

17.8 $F_D = F_C$ = Force in cable
D = 2.20 m
$A = \pi D^2/4 = \pi(2.20\text{ m})^2/4 = 3.80\text{ m}^2$
ρ = 1030 kg/m³ (Appendix B)

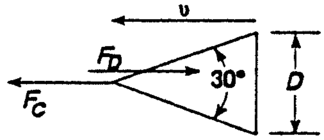

$$F_D = C_D\left(\frac{1}{2}\rho\upsilon^2\right)A = (0.34)(0.5)(1030)(7.5)^2(3.80\text{ m}^2)$$

$= 37.4 \times 10^3$ kg·m/s² = **37.4 kN**

17.9 Rectangular plate: a/b = 4 m/3 m = 1.33
C_D = 1.16 (Table 17.1)
υ = 125 km/h × 10^3 m/km × 1 h/3600 s = 34.7 m/s

$$F_D = C_D\left(\frac{1}{2}\rho\upsilon^2\right)A = (1.16)(0.5)(1.341)(34.7)^2(12) = 11.2 \times 10^3\text{ kg}\cdot\text{m/s}^2 = \mathbf{11.2\ kN}$$

17.10 υ = 20 km/h × 10^3 m/km × 1 h/3600 s = 5.56 m/s

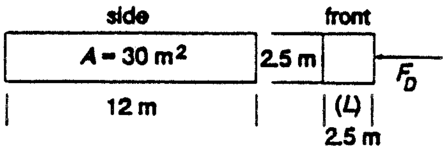

$$N_R = \frac{\upsilon L}{\nu} = \frac{(5.56)(2.5)}{1.33\times10^{-5}} = 1.04 \times 10^6$$

C_D = 2.05 (Estimated from Fig. 17.3)

$$F_D = C_D\left(\frac{1}{2}\rho\upsilon^2\right)A = (2.05)(0.5)(1.292)(5.56)^2(30) \qquad A = (12\text{ m})(2.5\text{ m}) = 30\text{ m}^2$$

$= 1.23 \times 10^3$ kg·m/s² = **1.23 kN**

17.11 υ = Linear velocity of each cup

$$\upsilon = r\omega = (0.075\text{ m})\left(\frac{20\text{ rev}}{\text{min}}\right)\left(\frac{2\pi\text{ rad}}{\text{rev}}\right)\left(\frac{1\text{ min}}{60\text{ s}}\right) = 0.157\text{ m/s}$$

$$A = \frac{\pi D^2}{4} = \pi(0.025\text{ m})^2/4 = 4.91 \times 10^{-4}\text{ m}^2$$

$C_D = 1.35$ (Table 17.1)

a. Air at 30°C

$\rho = 1.164\text{ kg/m}^3$

$$F_D = C_D\left(\frac{1}{2}\rho\upsilon^2\right)A = (1.35)(0.5)(1.164)(0.157)^2(4.91 \times 10^{-4})$$

$$= 9.5 \times 10^{-6}\text{ kg·m/s}^2 = 9.56\ \mu\text{N}$$

Torque $= 4F_Dr = (4)(9.56 \times 10^{-6}\text{ N})(0.075\text{ m})$

$= 2.85 \times 10^{-6}$ N·m = **2.85 μN·m**

b. Gasoline

$\rho = 680\text{ kg/m}^3$

$F_D = (1.35)(0.5)(680)(0.157)^2(4.91 \times 10^{-4}) = 5.56 \times 10^{-3}\text{ kg·m/s}^2 = 5.56$ mN

Torque $= 4F_Dr = (4)(5.56 \times 10^{-3}\text{ N})(0.075\text{ m}) = 1.67 \times 10^{-3}$ N·m = **1.67 mN·m**

$$\text{Ratio } \frac{T_G}{T_A} = \frac{1.67 \times 10^{-3}\text{ N·m}}{2.85 \times 10^{-6}\text{ N·m}} = 586$$

Motor circuit senses change in torque to indicate fluid level.

17.12 Assume center of gravity is at center of home. When overturning is imminent, no weight is on right wheel.

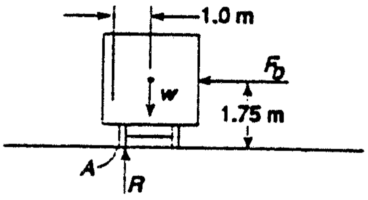

Then, $\sum M_A = 0 = w(1\text{ m}) - F_D(1.75\text{ m})$

$F_D = w/1.75$

But $F_D = C_D\left(\frac{1}{2}\rho\upsilon^2\right)A$; Assume $C_D = 2.05$ square cylinder (Fig. 17.3)

$A = (2.5\text{ m})(10\text{ m}) = 25\text{ m}^2$

$$\upsilon = \sqrt{\frac{2F_D}{C_D\rho A}} = \sqrt{\frac{2(w/1.75)}{(2.05)(1.292)(25)}} = 0.131\sqrt{w}\text{ m/s}$$

If w is weight in Newtons

Example: Assume $w = 5 \times 10^4$ N; $\upsilon = 0.131\sqrt{5 \times 10^4} = 29.3$ m/s

17.13 $v = \dfrac{100\text{ km}}{\text{h}} \times \dfrac{10^3\text{ m}}{\text{km}} \times \dfrac{1\text{ h}}{3600\text{ s}} = 27.8\text{ m/s}$

$\rho = 1.292\text{ kg/m}^3$; $\nu = 1.33 \times 10^{-5}\text{ m}^2\text{/s}$

Pressure drag: $F_{D_p} = C_{D_p}\left(\dfrac{1}{2}\rho v^2\right)A$

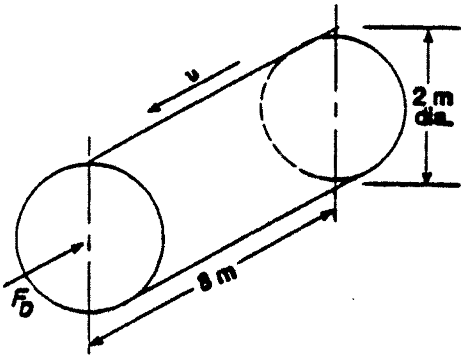

$L/D = 8\text{ m}/2\text{ m} = 4.0$; $C_D = 0.87$ (Table 17.1)

$A = \pi D^2/4 = \pi(2\text{m})^2/4 = 3.14\text{ m}^2$

$F_{D_p} = (0.87)(0.5)(1.292)(27.8)^2(3.14)$

$F_D = 1364\text{ kg·m/s}^2 =$ **1364 N**

17.14 $F_D = C_D\left(\dfrac{1}{2}\rho v^2\right)A$: $N_R = \dfrac{vD}{\nu} = \dfrac{(220)(0.167)}{1.16\times10^{-4}} = 3.15 \times 10^5 \rightarrow C_D = 0.8$ Fig. 17.3

↑

$v = \dfrac{150\text{ mi}}{\text{h}} \times \dfrac{5280\text{ ft}}{1\text{ mi}} \times \dfrac{1\text{ h}}{3600\text{ s}} = 220\text{ ft/s}$: $D = 2.0\text{ in}(1\text{ ft}/12\text{ in}) = 0.167\text{ ft}$
From Appendix E.2, $\nu = 1.17 \times 10^{-4}\text{ ft}^2\text{/s}$
$\rho = 2.80 \times 10^{-3}$ slugs/ft

$A = DL = (0.167\text{ ft})(64\text{ in})(1\text{ ft}/12\text{ in}) = 0.889\text{ ft}^2$

$F_D = 0.8(0.5)(2.80 \times 10^{-3}\text{ lb·s}^2\text{/ft}^4)(220\text{ ft/s})^2(0.889\text{ ft}^2) =$ **48.2 lb**

17.15 Elliptical cylinder — Table 17.1. $N_R = \dfrac{vL}{\nu} = \dfrac{(220)(1.33)}{1.17\times10^{-4}} = 2.50 \times 10^6$

Assume breadth = Dia. of cyl. rods = 2.0 in; Then $L = 8D = 8(2) = 16$ in = 1.33 ft

Use $C_D \approx 0.20$: Area is same as in Problem 17.14.

$F_D = (0.20)(0.5)(2.8 \times 10^{-3})(220)^2(0.889) =$ **12.05 lb 75% reduction**

Navy strut: Fig. 17.5; $C_D = 0.08$; Then $F_D = 4.82$ lb; 90% reduction from cylindrical rods.

17.16 $F_D = C_D\left(\dfrac{1}{2}\rho v^2\right)A = C_D(0.5)(2.80 \times 10^{-3})(147)^2(A)$

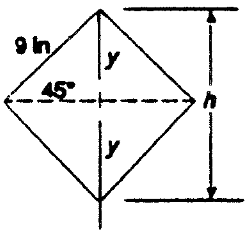

$= (30.12)(C_D)(A)$

$v = \dfrac{100\text{ mi}}{\text{h}} \times \dfrac{5280\text{ ft}}{1\text{ mi}} \times \dfrac{1\text{ h}}{3600\text{ s}} = 147\text{ ft/s}$

$A = (9\text{ in})(60\text{ in})\dfrac{1\text{ ft}^2}{144\text{ in}^2} = 3.75\text{ ft}^2$ for designs a, c, d.

For design b: $y = (9\text{ in})\sin 45° = 6.36$ in

$h = 2y = (12.73\text{ in})\dfrac{1\text{ ft}}{12\text{ in}} = 1.06\text{ ft}$

$A = h \times l = (1.06\text{ ft})(5.0\text{ ft}) = 5.303\text{ ft}^2$

a. **Square cylinder:** $L = 9 \text{ in} \times 1 \text{ ft}/12 \text{ in} = 0.75 \text{ ft}$

$$N_R = \frac{\upsilon L}{\nu} = \frac{(147)(0.75)}{(1.17\times10^{-4})} = 9.42 \times 10^5 \rightarrow \text{Use } C_D \approx 2.10 \text{ Fig. 17.3 Extrapolated}$$

└ [See Prob. 17.14 for ν]   NOTE: Extrapolated values should be verified.

$F_D = (30.12)(2.10)(3.75) =$ **237 lb**

b. Assume $C_D = 1.60$ — Square cylinder — Point first orientation
$F_D = (30.12)(1.60)(5.303) =$ **256 lb Highest**

c. **Circular cylinder:** $D = 9.0 \text{ in} = 0.75 \text{ ft}$

$$N_R = \frac{\upsilon D}{\nu} = \frac{(147)(0.75)}{(1.17\times10^{-4})} = 9.42 \times 10^5 \rightarrow C_D = 0.30 \text{ (Fig. 17.3)}$$

$F_D = (30.12)(0.30)(3.75) =$ **33.9 lb** Note that C_D would rise to approximately 1.30 at lower speed. But, because F_D is proportional to υ^2, drag force would likely be lower.

d. **Elliptical cylinder:** $L = 18 \text{ in} = 1.50 \text{ ft}$; $h = 9.00 \text{ in} = 0.75 \text{ ft}$; $L/h = 2.0$

$$N_R = \frac{\upsilon L}{\nu} = \frac{(147)(1.50)}{1.16\times10^{-4}} = 1.88 \times 10^6 \rightarrow \text{Use } C_D \approx 0.25 \text{ Fig. 17.5 Extrapolated}$$

$F_D = (30.12)(0.25)(3.75) =$ **28.2 lb Lowest**

17.17 $F_D = C_D\left(\frac{1}{2}\rho\upsilon^2\right)A$: $\upsilon = \frac{65 \text{ mi}}{\text{h}} \times \frac{5280 \text{ ft}}{\text{mi}} \times \frac{1 \text{ h}}{3600 \text{ s}} = 95.3 \text{ ft/s}$

$A = DL = (3.50 \text{ in})(92 \text{ in})1 \text{ ft}^2/144 \text{ in}^2 = 2.236 \text{ ft}^2$

$$N_R = \frac{\upsilon D}{\nu} = \frac{(95.3)(3.50/12)}{1.17\times10^{-4}} = 2.38 \times 10^5 \rightarrow C_D = 1.10 \text{ Fig. 17.3}$$

└ [See Problem 17.14 for ν]

$F_D = (1.10)(0.5)(2.80 \times 10^{-3})(95.3)^2(2.236) =$ **31.3 lb**

17.18 $F_{D_{tot}} = F_{D_{disks}} + F_{D_{tubes}}$: $\upsilon = 100 \text{ mi/hr} = 147 \text{ ft/s}$ (See Prob. 17.16):

$C_{D_{disks}} = 1.11$ (Table 17.1)

$$N_{R_{tubes}} = \frac{\upsilon D}{\nu} = \frac{(147)(4.5/12)}{1.17\times10^{-4}} = 4.71 \times 10^5 \rightarrow \text{Use } C_{D_T} = 0.33 \text{ Fig. 17.3}$$

└ [See Prob. 17.14]

$$A_{disks} = 3\frac{\pi D^2}{4}\frac{(3)(\pi)(56/12)^2}{4} = 51.31 \text{ ft}^2;\ A_{tubes} = DL = \left(\frac{4.5}{12}\right)\left(\frac{90}{12}\right) = 2.813 \text{ ft}^2$$

$$F_{D_{tot}} = C_{D_{disks}}\left(\frac{1}{2}\rho\upsilon^2\right)A_d + C_D\left(\frac{1}{2}\rho\upsilon^2\right)A_t = (1.11)(0.5)(2.80 \times 10^{-3})(147)^2(51.31)$$

$+ (0.33)(0.5)(2.80 \times 10^{-3})(147)^2(2.813) =$ 1723 lb + 28.1 lb = **1751 lb**

Disks Tubes Total

17.19 $F_D = C_D\left(\frac{1}{2}\rho\upsilon^2\right)(A)$: υ = (160 mi/h)(5280 ft/mi)(1 h/ 3600 s) = 235 ft/s

$A = DL$ = (0.20 in)(42 in)(1 ft^2/144 in^2) = 0.0583 ft^2

$N_R = \frac{\upsilon D}{\nu} = \frac{(235)(0.2/12)}{1.17\times10^{-4}} = 3.35\times10^4 \rightarrow C_D = 1.30$ Fig. 17.3

[See Prob. 17.14]

$F_D = (1.30)(0.5)(2.80\times10^{-3})(235)^2(0.0583) =$ **5.86 lb**

17.20 $F_D = C_D\left(\frac{1}{2}\rho\upsilon^2\right)(A) = (0.41)(0.50)(2.00\ \text{slugs/ft}^3)(25.0\ \text{ft/s})^2\left[\frac{\pi(7.25\ \text{ft})^2}{4}\right] =$ **10580 lb**

17.21 $F_D = C_D\left(\frac{1}{2}\rho\upsilon^2\right)(A)$: For plate, $\frac{a}{b} = \frac{11.0\ \text{in}}{8.5\ \text{in}} = 1.29 \rightarrow C_D = 1.16$ Table 17.1

A = (8.5 in)(11.0 in)(1 ft^2/144 in^2) = 0.649 ft^2

$F_D = (1.16)(0.50)(1.94)(44.0)^2(0.649) =$ **1414 lb**

υ = (30 mi/h)(5280 ft/mi)(1 h/3600 s) = 44.0 ft/s

17.22 $F_D = C_D\left(\frac{1}{2}\rho\upsilon^2\right)(A) = (1.11)(0.5)(2.47\times10^{-3})(88.0)^2\left[\frac{\pi(28/12)^2}{4}\right] =$ **45.4 lb**

υ = 60 mi/h = 88 ft/s

17.23 Golf ball – curve 2, $C_D = 0.17$; Smooth sphere – curve 1, $C_{D_s} = 0.44$

$A = \pi(1.25/12)^2/4 = 0.00852$ ft^2

$F_{D_{GB}} = (0.17)(0.5)(2.47\times10^{-3})(212)^2(0.00852) =$ **0.080 lb** on golf ball

Where $N_R = \frac{\upsilon D}{\nu}$; $\upsilon = \frac{N_R \nu}{D} = \frac{(1.5\times10^5)(1.47\times10^{-4})}{(1.25/12)} = 212$ ft/s

$F_{D_s} = F_{D_{GB}} \times \frac{C_{D_s}}{C_{D_{GB}}} = (0.080\ \text{lb})\frac{0.44}{0.17} =$ **0.207 lb** Smooth surface

17.24 $\upsilon = \frac{18\ \text{in}}{20.4\ \text{s}} \times \frac{\text{ft}}{12\ \text{in}} = 0.0735$ ft/s: D = (1.20 in)(1.0 ft/12 in) = 0.10 ft

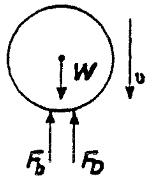

$\sum F_\gamma = 0 = w - F_b - F_D$: $F_D = w - F_b$

$w = \gamma_{st}V_{st} = (sg_{st})\gamma_w V_{st} = (7.83)(62.4\ \text{lb/ft}^3)(5.24\times10^{-4}\ \text{ft}^3) = 0.256$ lb

$V_{st} = \pi D^3/6 = \pi(0.10\ \text{ft})^3/6 = 5.24\times10^{-4}$ ft^3

$F_b = \gamma_{syrup}V_{st} = (sg_s)(\gamma_w)V_{st} = (1.18)(62.4)(5.24\times10^{-4}) = 0.0386$ lb

$F_D = w - F_b$ = 0.256 lb – 0.0386 lb = 0.217 lb = $3\pi\mu\upsilon D$ [Eq. 17.8]

$\mu = \frac{F_D}{3\pi\upsilon D} = \frac{0.217\ \text{lb}}{3\pi(0.0735\ \text{ft/s})(0.10\ \text{ft})} =$ **3.14 lb·s/ft^2**

17.25 $P_D = F_D \upsilon = C_D\left(\frac{1}{2}\rho\upsilon^2\right)A \times \upsilon$

$= (0.75)(0.5)(2.47 \times 10^{-3}\ \text{lb·s}^2/\text{ft}^4)(95.3\ \text{ft/s})^2(96\ \text{ft}^2)(95.3\ \text{ft/s})$

$F_D = 808$ lb $\qquad \downarrow \upsilon$

$\upsilon = (65\ \text{mi/h})(5280\ \text{ft/mi})(1\ \text{h}/3600\ \text{s}) = 95.3\ \text{ft/s}$

$A = (8\ \text{ft})(12\ \text{ft}) = 96\ \text{ft}^2$

$P_D = 7.70 \times 10^4 \frac{\text{lb·ft}}{\text{s}} \times \frac{\text{hp}}{550\ \text{lb·ft/s}} = \mathbf{140\ hp}$

17.26 $R_{ts}/\Delta = 0.06$; $R_{ts} = 0.06(\Delta) = (0.06)(125\ \text{tons})(2240\ \text{lb/ton}) = \mathbf{16800\ lb}$

$P_E = R_{ts}\upsilon = (16800\ \text{lb})(50\ \text{ft/s}) = \frac{840000\ \text{lb·ft/s}}{550\ \text{lb·ft/s}\langle\text{hp}\rangle} = \mathbf{1527\ hp}$

17.27 $R_{ts}/\Delta = 0.004$; $R_{ts} = (0.004)(8700\ \text{T})(2240\ \text{lb/T}) = \mathbf{77952\ lb}$

$P_E = R_{ts}\upsilon = (77952\ \text{lb})(30\ \text{ft/s})\frac{1\ \text{hp}}{550\ \text{lb·ft/s}} = \mathbf{4252\ hp}$

17.28 $F_L = C_L\left(\frac{1}{2}\rho\upsilon^2\right)(A) = (1.25)(0.5)(1.204)(\upsilon^2)[(0.78)(1.46)\text{m}^2] = 0.857\upsilon^2$

Use air at 20°C at std. atm. pressure, $\rho = 1.204\ \text{kg/m}^3 = \frac{1.204\ \text{N·s}^2}{\text{m}^4}$

For $\upsilon = 25$ m/s, $F_L = (0.857)(25)^2 = \mathbf{536\ N}$

17.29 $F_D = C_D\left(\frac{1}{2}\rho\upsilon^2\right)(A) = (0.105)(0.5)\left(\frac{0.9093\ \text{N·s}^2}{\text{m}^4}\right)(\upsilon^2)[(2\ \text{m})(10\ \text{m})] = 0.955(\upsilon^2)$

a. $\upsilon = \frac{600 \times 10^3\ \text{m}}{\text{h}} \times \frac{1\ \text{h}}{3600\ \text{s}} = 166.7\ \text{m/s}$; $F_D = 0.955(166.7)^2 = \mathbf{26.5\ kN}$

b. $\upsilon = (150 \times 10^3)/3600 = 41.67\ \text{m/s}$; $F_D = 0.955(41.67)^2 = \mathbf{1.66\ kN}$

17.30 $F_L = C_L\left(\frac{1}{2}\rho\upsilon^2\right)A$; $F_D = C_D\left(\frac{1}{2}\rho\upsilon^2\right)A$

$C_L = 0.90$; $C_D = 0.05$ (Fig. 17.10); $A = bc = (6.8\ \text{m})(1.4\ \text{m}) = 9.52\ \text{m}^2$

$\upsilon = \frac{200\ \text{km}}{\text{h}} \times \frac{10^3\ \text{km}}{\text{km}} \times \frac{1\ \text{h}}{3600\ \text{s}} = 55.56\ \text{m/s}$

a. At 200 m, $\rho = 1.202\ \text{kg/m}^3$ (Appendix E)

$F_L = (0.90)(0.5)(1.202)(55.56)^2(9.52) = 1.59 \times 10^4\ \text{kg·m/s}^2$

$= 1.59 \times 10^4\ \text{N} = \mathbf{15.9\ kN}$

$F_D = \frac{0.05}{0.90} \times 1.59 \times 10^4\ \text{N} = \mathbf{883\ N}$

b. At 10000 m; $\rho = 0.4135\ \text{kg/m}^3$

$F_L = (0.9)(0.5)(0.4135)(55.56)^2(9.52) = 5.47 \times 10^3\ \text{N} = \mathbf{5.47\ kN}$

$F_D = \dfrac{0.05}{0.90} \times 5.47 \times 10^3\ \text{N} = \mathbf{304\ N}$

17.31 For $\alpha = 19.6°$; $C_L = 1.52$; $C_D = 0.16$ (Other data same as Prob. 17.30)

a. $\left(\dfrac{1}{2}\rho\upsilon^2\right)A = (0.5)(1.202)(55.56)^2(9.52) = 1.766 \times 10^4\ \text{N}$

$F_L = 1.52(1.766 \times 10^4) = 2.68 \times 10^4\ \text{N} = \mathbf{26.8\ kN}$

$F_D = 0.16(1.766 \times 10^4) = 2.83 \times 10^3\ \text{N} = \mathbf{2.83\ kN}$

b. $\left(\dfrac{1}{2}\rho\upsilon^2\right)A = (0.5)(0.4135)(55.56)^2(9.52) = 6.076 \times 10^3\ \text{N}$

$F_L = 1.52(6.076 \times 10^3) = 9.24 \times 10^3\ \text{N} = \mathbf{9.24\ kN}$

$F_D = 0.16(6.076 \times 10^3) = \mathbf{972\ N}$

17.32 $\upsilon = \dfrac{125\ \text{km}}{\text{h}} \times \dfrac{10^3\ \text{m}}{\text{km}} \times \dfrac{1\ \text{h}}{3600\ \text{s}} = 34.72\ \text{m/s}$

For $\alpha = 15°$, $C_L = 1.25$ (Fig. 17.10)

$\rho = 1.164\ \text{kg/m}^3$; $A = 9.52\ \text{m}^2$ (Prob. 17.30)

$F_L = C_L\left(\dfrac{1}{2}\rho\upsilon^2\right)A = (1.25)(0.5)(1.164)(34.72)^2(9.52) = 8.35 \times 10^3\ \text{kg·m/s}^2$

$\boldsymbol{F_L} = \mathbf{8.35\ kN}$ = Load which could be lifted

17.33 $F_L = C_L\left(\dfrac{1}{2}\rho\upsilon^2\right)A$

Let F_L = Wt. of plane = mass × g = 1350 kg · 9.81 m/s² = 13.24×10^3 kg·m/s²

$F_L = 13.24$ kN At $\alpha = 2.5°$; $C_L = 0.33$ (Fig. 17.10) At 5000 m; $\rho = 0.7364\ \text{kg/m}^3$ Solve for A	$\upsilon = 125$ km/h = 34.72 m/s (Prob. 17.32)

$$A = \frac{2F_L}{C_L\ \rho\upsilon^2} = \frac{(2)(13.24 \times 10^3\ \text{kg·m/s}^2)}{(0.33)(0.7364\ \text{kg/m}^3)(34.72\ \text{m/s})^2} = \mathbf{90.4\ m^2}$$

CHAPTER EIGHTEEN

FANS, BLOWERS, COMPRESSORS, AND THE FLOW OF GASES

Units and conversion factors

18.1 $Q = 2650 \text{ cfm} \times \dfrac{1 \text{ ft}^3/\text{s}}{60 \text{ cfm}} = \mathbf{44.17 \text{ ft}^3/\text{s}}$

18.2 $Q = 8320 \text{ cfm} \times \dfrac{1 \text{ ft}^3/\text{s}}{60 \text{ cfm}} = \mathbf{138.7 \text{ ft}^3/\text{s}}$

18.3 $Q = 2650 \text{ cfm} \times \dfrac{1 \text{ m}^3/\text{s}}{2120 \text{ cfm}} = \mathbf{1.25 \text{ m}^3/\text{s}}$

18.4 $Q = 8320 \text{ cfm} \times \dfrac{1 \text{ m}^3/\text{s}}{2120 \text{ cfm}} = \mathbf{3.92 \text{ m}^3/\text{s}}$

18.5 $\upsilon = 1140 \text{ ft/min} \times \dfrac{1.0 \text{ m/s}}{197 \text{ ft/min}} = \mathbf{5.79 \text{ m/s}}$

18.6 $\upsilon = 5.62 \text{ m/s} \times \dfrac{3.28 \text{ ft/s}}{\text{m/s}} = \mathbf{18.43 \text{ ft/s}}$

18.7 $p = 4.38 \text{ in H}_2\text{O} \times \dfrac{1.0 \text{ psi}}{27.7 \text{ in H}_2\text{O}} = \mathbf{0.158 \text{ psi}}$

18.8 $Q = 4760 \text{ cfm} \times \dfrac{1.0 \text{ m}^3/\text{s}}{2120 \text{ cfm}} = \mathbf{2.25 \text{ m}^3/\text{s}}$

$p = 0.75 \text{ in H}_2\text{O} \times \dfrac{248.8 \text{ Pa}}{1.0 \text{ in H}_2\text{O}} = \mathbf{186.6 \text{ Pa}}$

18.9 $p = 925 \text{ Pa} \times \dfrac{1.0 \text{ in H}_2\text{O}}{248.8 \text{ Pa}} = \mathbf{3.72 \text{ in H}_2\text{O}}$

18.10 $p = 925 \text{ Pa} \times \dfrac{1.0 \text{ psi}}{6895 \text{ Pa}} = \mathbf{0.134 \text{ psi}}$

Specific weight of air

18.17 $p = p_{atm} + p_{gage} = 14.7 \text{ psia} + 80 \text{ psig} = 94.7 \text{ psia}$

$T = t + 460 = 75°F + 460 = 535°R$

$$\gamma = \frac{p}{RT} = \frac{94.7 \text{ lb}}{\text{in}^2} \times \frac{\text{lb}\cdot°\text{R}}{53.3 \text{ ft}\cdot\text{lb}} \times \frac{1}{535°\text{R}} \times \frac{144 \text{ in}^2}{\text{ft}^2} = \mathbf{0.478\ lb/ft^3} \text{ (Eq. 18.2)}$$

or $\gamma = \frac{2.70p}{T} = \frac{2.70(94.7)}{535} = 0.478 \text{ lb/ft}^3$ (Eq. 18.3)

18.18 $\gamma = \frac{2.70p}{T} = \frac{(2.70)(14.7 + 25)}{(105 + 460)} = \mathbf{0.190\ lb/ft^3}$ (Eq. 18.3) **Air**

18.19 $p = 4.50 \text{ in } H_2O \times \frac{1.0 \text{ psi}}{27.7 \text{ in } H_2O} = 0.162 \text{ psig}$ **Natural gas**

$p_{abs} = p_{atm} + p_{gage} = 14.7 \text{ psia} + 0.162 \text{ psig} = 14.86 \text{ psia}$

$T = 55°F + 460 = 515°R$

$$\gamma = \frac{p}{RT} = \frac{14.86 \text{ lb}}{\text{in}^2} \times \frac{\text{lb}\cdot°\text{R}}{79.1 \text{ ft-lb}} \times \frac{1}{515°\text{R}} \times \frac{144 \text{ in}^2}{\text{ft}^2} = \mathbf{0.0525\ lb/ft^3}$$

18.20 $p = p_{atm} + p_{gage} = 14.7 \text{ psia} + 32 \text{ psig} = 46.7 \text{ psia}$ **Nitrogen**

$T = 120°F + 460 = 580°R$

$$\gamma = \frac{p}{RT} = \frac{46.7 \text{ lb}}{\text{in}^2} \times \frac{\text{lb}\cdot°\text{R}}{55.2 \text{ ft-lb}} \times \frac{1}{580°\text{R}} \times \frac{144 \text{ in}^2}{\text{ft}^2} = \mathbf{0.210\ lb/ft^3}$$

18.21 $p = p_{atm} + p_{gage} = 101.3 \text{ kPa(air)} + 1260 \text{ Pa(gage)} \times \frac{\text{kPa}}{10^3 \text{ Pa}} = 102.56 \text{ kPa(abs)}$ **Air**

$T = t + 273 = 25°C + 273 = 298 \text{ K}$

$$\gamma = \frac{p}{RT} = \frac{102.56 \times 10^3 \text{ N}}{\text{m}^2} \times \frac{\text{N}\cdot\text{K}}{29.2 \text{ N}\cdot\text{m}} \times \frac{1}{298 \text{ K}} = \mathbf{11.79\ N/m^3}$$

18.22 $p = p_{atm} + p_{gage} = 14.7 \text{ psia} + 12.6 \text{ psig} = 27.3 \text{ psia}$

$T = 85°F + 460 = 545°R$

$$\gamma = \frac{p}{RT} = \frac{27.3 \text{ lb}}{\text{in}^2} \times \frac{\text{lb}\cdot°\text{R}}{35.0 \text{ ft}\cdot\text{lb}} \times \frac{1}{545°\text{R}} \times \frac{144 \text{ in}^2}{\text{ft}^2} = \mathbf{0.207\ lb/ft^3}$$

Flow of compressed air in pipes

18.23 $Q_a = 820 \text{ cfm} \times \frac{14.7 \text{ psia}}{(14.7 + 80)\text{psia}} \times \frac{(75 + 460)°\text{R}}{520°\text{R}} = \mathbf{131.0\ cfm}$ (Eq. 18.4a)

18.24 $Q_a = 2880 \text{ cfm} \times \frac{14.7}{(14.7 + 65)} \times \frac{(95 + 460)}{520} = \mathbf{566.9\ cfm}$

18.25 From Table 18.1; **2 in Sch. 40 pipe**

18.26 **1-1/4 in Sch. 40 pipe**

18.27 Q = 800 cfm (Free air); p_2 = 100 psig @ 70°F

Try a **2-1/2 in Sch. 40 pipe:** D = 0.2058 ft; A = 0.3326 ft²

$$\frac{p_1}{\gamma_1} = z_1 + \frac{\upsilon_1^2}{2g} - h_L = \frac{p_2}{\gamma_2} + z_2 + \frac{\upsilon_2^2}{2g}: \; z_1 = z_2,\ \upsilon_1 = \upsilon_2: \text{ then } p_1 = p_2 + \gamma h_L$$

$$\gamma = \frac{2.70p}{T} = \frac{2.70(14.7+100)\text{psia}}{(70°\text{F}+460)°\text{R}} = 0.584 \text{ lb/ft}^3$$

$$h_L = f\left(\frac{L}{D}\right)\frac{\upsilon^2}{2g} + f_T\left(\frac{L_e}{D}\right)_{\text{tot}}\frac{\upsilon^2}{2g}: \; \frac{L}{D} = \frac{350 \text{ ft}}{0.2058 \text{ ft}} = 1700$$

$$\left(\frac{L_e}{D}\right)_{\text{tot}} = 8(30) + 2(8) + 100 = 356; \; f_T = 0.018$$

Elbows Gate V. Check valve

$$Q_a = 800 \text{ cfm} \times \frac{14.7 \text{ psia}}{(14.7+100)\text{psia}} \times \frac{(70+460)°\text{R}}{520°\text{R}} = 104.5 \text{ cfm}$$

$$\upsilon = \frac{Q}{A} = \frac{104.5 \text{ ft}^3}{\text{min}} \times \frac{1}{0.03326 \text{ ft}^2} \times \frac{1 \text{ min}}{60 \text{ s}} = 52.4 \text{ ft/s}$$

$$\frac{\upsilon 2}{2g} = \frac{(52.4)^2 \text{ ft}^2/\text{s}^2}{2(32.2 \text{ ft/s}^2)} = 42.58 \text{ ft}$$

$$\text{Density} = \rho = \frac{\gamma}{g} = \frac{0.584 \text{ lb}}{\text{ft}^3}\frac{\text{s}^2}{32.2 \text{ ft}} = 0.0181 \text{ slugs/ft}^3$$

t = (70°F – 32)(5/9) = 21.1°C; $\mu = 1.815 \times 10^{-5}$ Pa·s (App. E by interpolation)

$\mu = (1.815 \times 10^{-5}\text{ Pa·s})(2.089 \times 10^{-2}) = 3.792 \times 10^{-7}$ lb·s/ft²

$$N_R = \frac{\upsilon D\rho}{\mu} = \frac{(52.4)(0.2058)(0.0181)}{3.792\times10^{-7}} = 5.15 \times 10^5$$

$$\frac{D}{\varepsilon} = \frac{0.2058}{1.5\times10^{-4}} = 1372; f = 0.0195$$

$$h_L = \left[f\left(\frac{L}{D}\right) + f_T\left(\frac{L_e}{D}\right)_{\text{tot}}\right]\frac{\upsilon^2}{2g} = [(0.0195)(1700) + 0.018(356)](42.58 \text{ ft}) = 1684 \text{ ft}$$

$$p_1 = p_2 + \gamma h_L = 100 \text{ psig} + \frac{0.584 \text{ lb}}{\text{ft}^3} \times 1684 \text{ ft} \times \frac{1 \text{ ft}^2}{144 \text{ in}^2} = \mathbf{106.8 \text{ psig}}$$

$p_1 - p_2 = 6.7$ psi $< 0.1p_2$ **OK**

18.28 $Q = 3000$ cfm (Free air); $p_2 = 80$ psig @ 120°F

Try a 3-1/2 in Sch. 40 pipe: $D = 0.2957$ ft; $A = 0.06868$ ft^2

$$\frac{p_1}{\gamma_1} = z_1 + \frac{\upsilon_1^2}{2g} - h_L = \frac{p_2}{\gamma_2} + z_2 + \frac{\upsilon_2^2}{2g}: \; z_1 = z_2,\ \upsilon_1 = \upsilon_2: \text{ then } p_1 = p_2 + \gamma h_L$$

$$\gamma = \frac{2.70p}{T} = \frac{2.70(14.7+80)\text{psia}}{(120+460)^\circ\text{R}} = 0.4408 \text{ lb/ft}^3$$

① $$h_L = f\left(\frac{L}{D}\right)\frac{\upsilon^2}{2g} + f_T\left(\frac{L_e}{D}\right)_{\text{tot}}\frac{\upsilon^2}{2g}: \; \frac{L}{D} = \frac{180\text{ ft}}{0.2957\text{ ft}} = 609$$

$$\left(\frac{L_e}{D}\right)_{\text{tot}} = 45 + 12(30) + 4(20) + 150 = 635; \; f_T = 0.017$$

Valve Elbows Tees Ch. valve

$$Q_a = 3000\text{ cfm} \times \frac{14.7\text{ psia}}{(14.7+80)\text{psia}} \times \frac{(120+460)^\circ\text{R}}{520^\circ\text{R}} = 519.4\text{ cfm}$$

$$\upsilon = \frac{Q_a}{A} = \frac{519.4\text{ ft}^3}{\text{min}} \times \frac{1}{0.06868\text{ ft}^2} \times \frac{1\text{ min}}{60\text{ s}} = 126.0\text{ ft/s}$$

$\upsilon^2/2g = (126.0)^2/2(32.2) = 246.7$ ft

$$\text{Density} = \rho = \gamma/g = \frac{0.4408\text{ lb}}{\text{ft}^3}\frac{\text{s}^2}{32.2\text{ ft}} = 0.01369\text{ slugs/ft}^3$$

$t = (120°\text{F} - 32)5/9 = 48.89°\text{C}$; $\mu = 1.946 \times 10^{-5}$ Pa·s (App. E by interpolation)

$\mu = (1.946 \times 10^{-5}\text{ Pa·s})(2.089 \times 10^{-2}) = 4.065 \times 10^{-7}$ lb·s/ft^2

$$N_R = \frac{\upsilon D\rho}{\mu} = \frac{(126)(0.2957)(0.01369)}{4.065\times10^{-7}} = 1.25 \times 10^6$$

$D/\varepsilon = 0.2957\text{ ft}/1.5 \times 10^{-4}\text{ ft} = 1971$; $f = 0.0175$

In Eq.①: $h_L = [(0.0175)(609) + (0.017)(635)](246.7\text{ ft}) = 5292$ ft

$$p_1 = p_2 + \gamma h_L = 80\text{ psig} + \frac{0.4408\text{ lb}}{\text{ft}^3} \times 5292\text{ ft} \times \frac{1\text{ ft}^2}{144\text{ in}^2} = 80 + 16.20 = 96.20\text{ psig}$$

Δp = 16.20 psi is $> 0.10p_2$ — Use larger pipe size

For 4-in Sch. 40 pipe: $D = 0.3355$ ft; $A = 0.0884$ ft^2; $f_T = 0.017$

$$\upsilon = \frac{Q_a}{A} = \frac{519.4}{(0.0884)(60)} = \frac{97.9\text{ ft}}{\text{s}}; \; \frac{\upsilon^2}{2g} = 148.9\text{ ft}$$

$$N_R = \frac{\upsilon D\rho}{\mu} = \frac{(97.9)(0.3355)(0.01369)}{4.065\times10^{-7}} = 1.11 \times 10^6$$

$D/\varepsilon = 0.3355/1.5 \times 10^{-4} = 2237$: $f = 0.0170$

In Eq.①: $h_L = [(0.017)(609) + (0.017)(635)](148.9\text{ ft}) = 3149$ ft

$p_1 = p_2 + \gamma h_L = 80\text{ psig} + (0.4408)(3149)/144 = 80 + 9.64 = 89.6$ psig

Δp is slightly $> 0.1p_2$

Try 5-in Sch. 40 pipe: $D = 0.4206$ ft: $A = 0.1390$ ft^2; $f_T = 0.016$

$$\upsilon = \frac{Q_a}{A} = \frac{519.4}{(0.139)(60)} = \frac{62.28 \text{ ft}}{\text{s}}; \frac{\upsilon^2}{2g} = 60.23 \text{ ft}$$

$$N_R = \frac{\upsilon D\rho}{\mu} = \frac{(62.28)(0.4206)(0.01369)}{4.065\times10^{-7}} = 8.82 \times 10^5$$

$D/\varepsilon = 0.4206/1.5 \times 10^{-4} = 2804$: $f = 0.017$

In Eq.①: $h_L = [(0.017)(609) + (0.016)(635)](60.23 \text{ ft}) = 1235$ ft

$p_1 = p_2 + \gamma h_L = 80 + (0.4408)(1235)/144 = 80 + 3.78 =$ **83.78 psig**

$\Delta p < 0.1p_2$ — **OK**

Gas flow through nozzles

18.29 $p_1 = 40.0$ psig + 14.7 psia = 54.7 psia; $T_1 = 80°\text{F} + 460 = 540°\text{R}$

$p_2 = 20.0$ psig + 14.7 psia = 34.7 psia **Air**

$$\gamma_1 = \frac{2.70p_1}{T_1} = \frac{2.70(54.7 \text{ psia})}{540°\text{R}} = 0.2735 \text{ lb/ft}^3 \quad \text{(Eq. 18.3)}$$

$$\gamma_2 = \gamma_1\left[\frac{p_2}{p_1}\right]^{1/k} = \frac{0.2735 \text{ lb}}{\text{ft}^3}\left[\frac{34.7}{54.7}\right]^{1/1.4} = \mathbf{0.198\ lb/ft^3} \quad \text{(Eq. 18.8)}$$

18.30 $p_1 = 275$ kPa(gage) + 101.3 kPa(abs) = 376.3 kPa(abs) **Air**

$T_1 = 25°\text{C} + 273 = 298$ K

$p_2 = 140$ kPa(gage) + 101.3 kPa(abs) = 241.3 kPa(abs)

$$\gamma_1 = \frac{p_1}{RT_1} = \frac{376.3\times10^3 \text{ N}}{\text{m}^2}\times\frac{\text{N}\cdot\text{K}}{29.2 \text{ N}\cdot\text{m}}\times\frac{1}{298 \text{ K}} = \mathbf{43.2\ N/m^3}$$

$$\gamma_2 = \gamma_1\left[\frac{p_2}{p_1}\right]^{1/k} = \frac{43.2 \text{ N}}{\text{m}^3}\left[\frac{241.3}{376.3}\right]^{1/1.4} = \mathbf{31.5\ N/m^3}$$

18.31 $p_1 = 35.0$ psig + 14.7 psia = 49.7 psia: **R-12**

$T_1 = 60°\text{F} + 460 = 520°\text{R}$

$p_2 = 3.6$ psig + 14.7 psia = 18.3 psia

$$\gamma_1 = \frac{P_1}{RT_1} = \frac{49.7 \text{ lb}}{\text{in}^2}\times\frac{\text{lb}\cdot°\text{R}}{12.6 \text{ ft-lb}}\times\frac{1}{520°\text{R}}\times\frac{144 \text{ in}^2}{\text{ft}^2} = \mathbf{1.092\ lb/ft^3}$$

$$\gamma_2 = \gamma_1\left[\frac{p_2}{p_1}\right]^{1/k} = \frac{1.092 \text{ lb}}{\text{ft}^3}\left[\frac{18.3}{49.7}\right]^{1/1.13} = \mathbf{0.506\ lb/ft^3}$$

18.32 $p_1 = 125$ psig + 14.4 psia = 139.4 psia **Oxygen**, $k = 1.40$

$T_1 = 75°\text{F} + 460 = 535°\text{R}$

$$p_2 = 14.40 \text{ psia} = p_{atm};\ p_1 = \frac{139.4 \text{ lb}}{\text{in}^2}\times\frac{144 \text{ in}^2}{\text{ft}^2} = 20074 \text{ lb/ft}^2$$

$$\frac{p_2}{p_1} = \frac{14.40}{139.4} = 0.103; \text{ Critical ratio} = 0.528 \text{ from App. N.}$$

Then use **Eq. 18.15:**

$$A_2 = \frac{\pi D_2^2}{4} = \frac{\pi(0.120\text{ in})^2}{4} \times \frac{\text{ft}^2}{144\text{ in}^2} = 7.854 \times 10^{-5}\text{ ft}^2$$

$$\gamma_1 = \frac{p_1}{RT_1} = \frac{139.4\text{ lb}}{\text{in}^2} \times \frac{\text{lb}\cdot°\text{R}}{48.3\text{ ft-lb}} \times \frac{1}{535°\text{R}} \times \frac{144\text{ in}^2}{\text{ft}^2} = 0.777\text{ lb/ft}^3$$

$$W_{max} = 7.854 \times 10^{-5}\text{ ft}^2 \left[\frac{2(32.2\text{ ft/s}^2)(1.40)}{1.40+1}\frac{20074\text{ lb}}{\text{ft}^2}\frac{0.777\text{ lb}}{\text{ft}^3}\left[\frac{2}{1.40+1}\right]^{2/0.4}\right]^{1/2}$$

W_{max} = **0.0381 lb/s**

$$\upsilon = c = \sqrt{\frac{\text{kg}p_2}{\gamma_2}} = \left[\frac{(1.40)(32.2\text{ ft/s}^2)(10605\text{ lb/ft}^2)}{0.493\text{ lb/ft}^3}\right]^{1/2} = \mathbf{985\text{ ft/s}}$$

$$p_2 = p_{2_c} = p_1\left[\frac{2}{k+1}\right]^{k/k-1} = 20074\left[\frac{2}{2.40}\right]^{1.4/.4} = 10605\text{ lb/ft}^2$$

$$\gamma_2 = \gamma_1\left(\frac{p_2}{p_1}\right)^{1/k} = 0.777(0.528)^{1/1.4} = 0.493\text{ lb/ft}^3$$

18.33 p_1 = 7.50 psig + 14.40 psia = 21.9 psia (144 in²/ft²) = 3154 lb/ft²

$$\frac{p_2}{p_1} = \frac{14.40}{21.90} = 0.658 > \text{critical; Use Eq. 18.11}$$

$$\gamma_1 = \frac{p_1}{RT_1} = \frac{3154\text{ lb}}{\text{ft}^2} \times \frac{\text{lb}\cdot°\text{R}}{48.3\text{ ft-lb}} \times \frac{1}{535°\text{R}} = 0.122\text{ lb/ft}^3$$

$$W = 7.854 \times 10^{-5}\left[\frac{2(32.2)(1.40)(3154)(0.122)}{1.40-1}\left[(0.658)^{2/1.4} - (0.658)^{2.4/1.4}\right]\right]^{1/2}$$

W = **5.76 × 10⁻³ lb/s**

Use Eq. 18.10 for velocity

$$\upsilon_2 = \left[\frac{2(32.2)(3154)}{0.122} \times \frac{1.40}{0.4} \times \left[1-(0.658)^{0.4/1.4}\right]\right]^{1/2} = \mathbf{811\text{ ft/s}}$$

18.34 $p_1 = 50\text{ psig} + 14.60\text{ psia} = \frac{64.60\text{ lb}}{\text{in}^2} \times \frac{144\text{ in}^2}{\text{ft}^2} = 9302\text{ lb/ft}^2$ **Nitrogen**

T_1 = 70°F + 460 = 530°R

$$\frac{p_2}{p_1} = \frac{14.60}{64.60} = 0.226 < \text{critical ratio} = 0.527 \text{ (App. N)}$$

Use Eq. 18.15

$$A_2 = \frac{\pi(0.062\text{ in})^2}{4} \times \frac{\text{ft}^2}{144\text{ in}^2} = 2.097 \times 10^{-5}\text{ ft}^2$$

$$\gamma_1 = \frac{p_1}{RT_1} = \frac{9302\text{ lb}}{\text{ft}^2} \times \frac{\text{lb}\cdot°\text{R}}{55.2\text{ ft}\cdot\text{lb}} \times \frac{1}{530°\text{R}} = 0.318\text{ lb/ft}^3$$

$$W_{max} = 2.097 \times 10^{-5}\text{ ft}^2\left[\frac{2(32.2\text{ ft/s}^2)(1.41)}{1.41+1} \times \frac{9302\text{ lb}}{\text{ft}^2} \times \frac{0.318\text{ lb}}{\text{ft}^3}\left[\frac{2}{2.41}\right]^{2/0.41}\right]^{1/2}$$

W_{max} = **4.44 × 10⁻³ lb/s**

18.35 Use data from Problem 18.34.

p_1 (psig)	$W (\times 10^{-3}$ lb/s)	
45	4.098	Using Eq. 18-15
40	3.754	Using Eq. 18-15
35	3.410	Using Eq. 18-15
30	3.066	Using Eq. 18-15
25	2.723	Using Eq. 18-15
20	2.379	Using Eq. 18-15
15	2.035	Using Eq. 18-15
10	1.675	Using Eq. 18-11
5	1.197	Using Eq. 18-11
0	0.0	Using Eq. 18-11

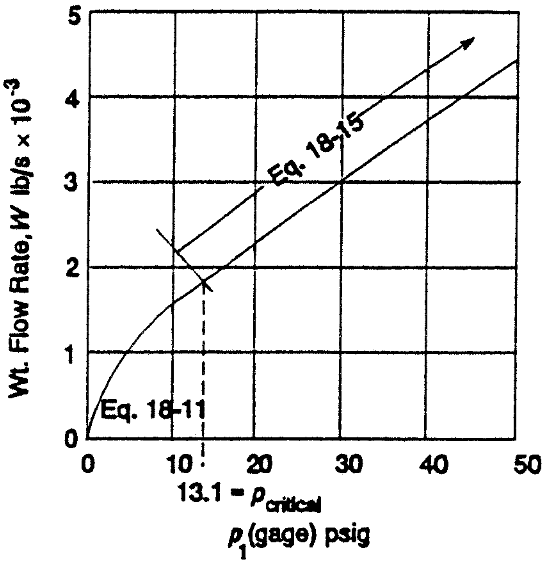

18.36 Nozzle dia. = 0.50 in

$$p_1 = 25.0 \text{ psig} + 14.28 \text{ psia} = \frac{39.28 \text{ lb}}{\text{in}^2} \times \frac{144 \text{ in}^2}{1 \text{ ft}^2} = 5656 \text{ lb/ft}^2$$

$$\text{Propane: } \left(\frac{p_2}{p_1}\right)_c = 0.574;\ A_2 = \frac{\pi D_2^2}{4} = \frac{\pi (0.5 \text{ in})^2}{4} \frac{\text{ft}^2}{144 \text{ in}^2} = 1.364 \times 10^{-3} \text{ ft}^2$$

$$\gamma_1 = \frac{p_1}{RT_1} = \frac{5656 \text{ lb}}{\text{ft}^2 (35.0 \text{ ft}\cdot\text{lb/lb}\cdot{}^\circ\text{R})(65^\circ\text{F} + 460)^\circ\text{R}} = 0.308 \text{ lb/ft}^3$$

For $p_2 = p_1 = 25.0$ psig, $p_2/p_1 = 1$ and $W = 0$

For p_2 = 20.0 psig + 14.28 psi = (34.28 psia)(144 in²/ft²) = 4936 lb/ft²

$$p_2/p_1 = \frac{4936}{5656} = 0.8727 > \text{critical — Use Eq. 18.11}$$

$$W = (1.364 \times 10^{-3} \text{ ft}^2)\sqrt{\underbrace{\frac{2(32.2 \text{ ft/s}^2)(1.15)(5656 \text{ lb})(0.308 \text{ lb})}{(1.15-1) \text{ ft}^2 \text{ ft}^3}}_{8.597 \times 10^5}\left[(0.8727)^{2/1.15} - (0.8727)^{2.15/1.15}\right]}$$

W = 0.149 lb/s

$p'_{2c} = p_1(0.574) = 39.28 \text{ psia}(0.574) = 22.55 \text{ psia} - 14.28 \text{ psia} = 8.27 \text{ psig}$

For $p_2 \leqq 8.27$ psig, Use Eq. 18.15.

$$W_{max} = (1.364 \times 10^{-3})\sqrt{\frac{2(32.2)(1.15)(5656)(0.308)}{2.15}\left(\frac{2}{2.15}\right)^{2/0.15}} = \mathbf{0.206 \text{ lb/s}}$$

	p_2(psig)	p_2/p_1	W(lb/s)
	25.0	1.0	0.0
	20.0	0.8727	0.149
	15.0	0.7454	0.190
	10.0	0.6181	0.205
critical	8.27	0.574	0.206
	5.0	0.491	0.206

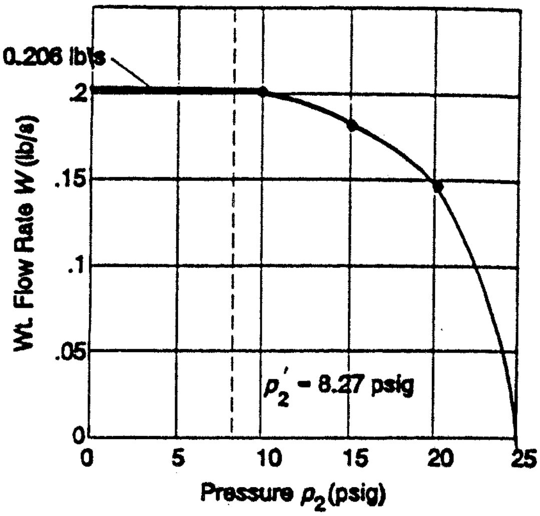

18.37 $\left(\dfrac{p_2}{p_1}\right)_c = 0.528;\ p_1 = \dfrac{p_2}{0.528} = \dfrac{98.5\text{ kPa}}{0.528}$ = **186.6 kPa**

18.38 $c = \sqrt{\dfrac{kg\,p_2}{\gamma_2}} = \sqrt{\dfrac{(1.40)(9.81\text{ m/s}^2)(186.6\times10^3\text{ N/m}^2)}{11.00\text{ N/m}^3}}$ = **483 m/s**

$$\gamma_1 = \frac{p_1}{RT_1} = \frac{186.6\times10^3\text{ N/m}^2}{\dfrac{29.2\text{ N}\cdot\text{m}}{\text{N}\cdot\text{K}}\times(95+273)\text{K}} = 17.36\text{ N/m}^3$$

$\gamma_2 = \gamma_1(p_2/p_1)^{1/k} = (17.36)(0.528)^{1/1.4} = 11.00\text{ N/m}^3$

18.39 Use Eq. 18.15: $A_2 = \pi(0.010\text{ m})^2/4 = 7.85\times10^{-5}\text{ m}^2$

$$W_{max} = (7.85\times10^{-5}\text{ m}^2)\sqrt{\frac{2(9.81)(1.40)(186.6\times10^3)(17.36)}{2.40}\left(\frac{2}{2.40}\right)^{2/0.4}}$$

= **9.58 × 10⁻³ N/s**

18.40 p_1 = 150 kPa(gage) + 100 kPa(atm) = 250 kPa(abs): $\dfrac{p_2}{p_1} = \dfrac{100}{250} = 0.40:\ \left(\dfrac{p_2}{p_1}\right)_c = 0.578$

Use **Eq. 18.15**: $A_2 = \pi(0.008\text{ m})^2/4 = 5.027\times10^{-5}\text{ m}^2$

$$\gamma_1 = \frac{p_1}{RT_1} = \frac{250\times10^3\text{ N/m}^2}{\dfrac{6.91\text{ N}\cdot\text{m}}{\text{N}\cdot\text{K}}\times(20°\text{C}+273)\text{K}} = 123.5\text{ N/m}^3$$

$$W_{max} = (5.027\times10^{-5}\text{ N/m}^3)\sqrt{\frac{2(9.81)(1.13)}{2.13}(250\times10^3)(123.5)\left(\frac{2}{2.13}\right)^{2/0.13}} = \mathbf{0.555\ N/s}$$

18.41 When $p_2/p_1 < 0.578$, use method of Prob. 18.40, Eq. 18.15.

When $p_2/p_1 = 0.578$; $p_{1_c} = \dfrac{p_2}{0.578} = \dfrac{100\text{ kPa}}{0.578} = 173.0$ kPa(abs)

$p_{1_c} = 173.0 - 100 = 73.0$ kPa(gage): Then for $p_1 < 73.0$ kPa(gage), use Eq. 18.11.

p_1(gage)	p_1(abs)	(p_{atm}/p_1)	γ_1(N/m^3)	W(N/s)	
150 kPa	250 kPa	0.40	123.5	0.555	$\frac{p_2}{p_1}$ > critical
125	225	0.444	111.1	0.500	
100	200	0.500	98.8	0.444	
75	175	0.571	86.4	0.389	Use Eq. 18.15
73.0	173	0.578	85.4	0.384	critical
50.0	150	0.667	74.1	0.326	$\frac{p_2}{p_1}$ > critical
25	125	0.800	61.7	0.238	Use Eq. 18.1

Eq. 18.11

$$W = (5.027\times10^{-5})\sqrt{\frac{2(9.81)(1.13)}{0.13}(p_1\gamma_1)\left[\left(\frac{p_2}{p_1}\right)^{2/1.13} - \left(\frac{p_2}{p_1}\right)^{2.13/1.13}\right]}$$

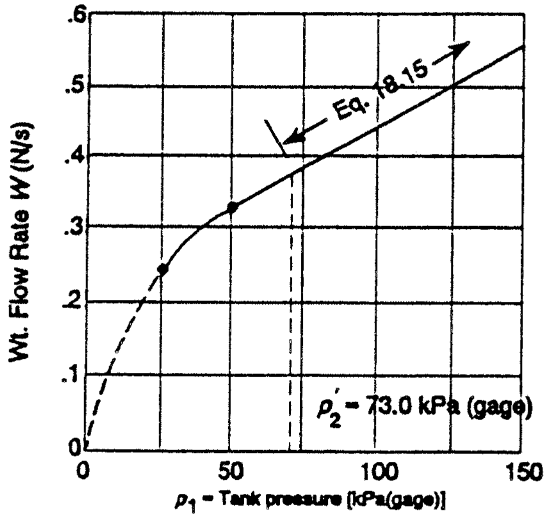

CHAPTER NINETEEN

FLOW OF AIR IN DUCTS

Energy losses in straight duct sections

19.1 From Fig. 19.2: υ = **570 ft/min**; 0.027 in H_2O/100 ft
h_L = 0.027 in H_2O × 75 ft/100 ft = **0.0203 in H_2O For 18 in Duct**
Q = 1000 cfm

19.2

Duct size	υ (ft/min)	h_L/100 ft (in H_2O)	h_L for 75 ft
16 in	720	0.049	0.037 in H_2O
14 in	960	0.100	0.075
12 in	1275	0.220	0.165
10 in	1850	0.530	0.400

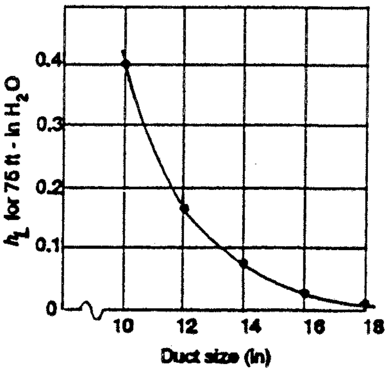

19.3 **D = 17.0 in** req'd
h_L = 0.078 in H_2O/100 ft

19.4 From Fig. 19.3: υ = **15.3 m/s**
Loss = 4.70 Pa/m × 25 m = **118 Pa**
For 500 mm dia. duct

19.5 25 m of duct
3.0 m^3/s flow

Duct size (mm)	υ(m/s)	h_L Pa/m	h_L for 25 m
600	**10.6**	1.90	**47.5 Pa**
700	**8.00**	0.90	**22.5**
800	**6.00**	0.44	**11.0**
900	**4.80**	0.26	**6.50**
1000	**3.80**	0.14	**3.50**

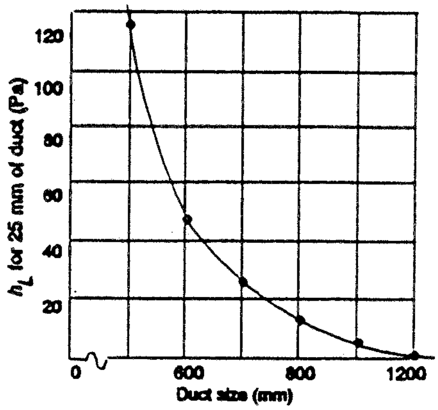

19.6 Q = 0.40 m^3/s: **350 mm duct size** req'd: **h_L = 0.58 Pa/m**

19.7 10 × 30 in duct:

$$D_e = \frac{1.3(ab)^{5/8}}{(a+b)^{1/4}} = \frac{1.3[(10)(30)]^{0.625}}{(10+30)^{0.250}} - \mathbf{18.3\ in}$$

Q_{max} = **2100 ft^3/min** for h_L = 0.10 in H_2O/100 ft

19.8 3 × 10 in duct:

$$D_e = \frac{1.3(ab)^{0.625}}{(a+b)^{0.250}} = \frac{1.3[(3)(10)]^{0.625}}{(3+10)^{0.250}} = \mathbf{5.74\ in}:\ Q_{max} = \mathbf{95\ cfm}$$

For $h_L = 0.10$ in H_2O

19.9 42 × 60 in duct:

$$D_e = \frac{1.30[(42)(60)]^{0.625}}{(42+60)^{0.250}} = \mathbf{54.7\ in}:\ Q_{max} = \mathbf{37000\ cfm}$$

for $h_L = 0.10$ in H_2O

19.10 250 × 500 mm duct:

$$D_e = \frac{1.30[(250)(500)]^{0.625}}{(250+500)^{0.250}} = \mathbf{381\ mm}:\ Q_{max} = \mathbf{0.60\ m^3/s}$$

for $h_L = 0.80$ Pa/m

19.11 75 × 250 mm duct:

$$D_e = \frac{1.30[(75)(250)]^{0.625}}{(75+500)^{0.25}} = \mathbf{125\ mm}:\ Q_{max} = 0.0295\ m^3/s$$

19.12 $Q = 1500$ cfm; $h_{L_{max}} = 0.10$ in H_2O per 100 ft → $\boldsymbol{D_e = 16.2}$ **in**

Duct: **10 × 24, 12 × 20** Possible sizes from Table 19.2

19.13 $Q = 300$ cfm; $h_{L_{max}} = 0.10$ in H_2O per 100 ft → $\boldsymbol{D_e = 8.8}$ **in**

Duct: **6 × 12** ($D_e = 9.1$ in)

Energy losses in ducts with fittings

19.14 $Q = 650$ cfm; $D = 12$ in round; $\upsilon = 830$ ft/min (Fig. 19.2)

$$H_\upsilon = \left(\frac{\upsilon}{4005}\right)^2 = \left(\frac{830}{4005}\right)^2 = 0.0429 \text{ in } H_2O;\ C = 0.42 \text{ 3-pc elbow}$$

$H_L = CH_\upsilon = 0.42(0.0429) =$ **0.0180 in H_2O**

19.15 $C = 0.33$ 5-pc elbow; $H_L = CH_\upsilon = 0.33(0.0429) =$ **0.0142 in H_2O**

19.16 $Q = 1500$ cfm; $D = 16$ in; $\upsilon = 1080$ ft/min (Fig. 19.2)

$$H_\upsilon = \left(\frac{\upsilon}{4005}\right)^2 = \left(\frac{1080}{4005}\right)^2 = 0.0727 \text{ in } H_2O;\ C = 0.20$$

$H_L = CH_\upsilon = 0.20(0.0727) =$ **0.0145 in H_2O**

19.17 $H_\upsilon = 0.0727$ in H_2O (Prob. 19.16), $h_L = CH_\upsilon$

Position	C	h_L (in H_2O)
10°	0.52	**0.378**
20°	1.50	**0.109**
30°	4.5	**0.327**

19.18 10 × 22 → 15.9 in circ. equiv.
10 × 10 → 10.9 in circ. equiv.
υ_1 = 1160 ft/min, H_υ = 0.0839 in H_2O
υ_2 = 800 ft/min, H_υ = 0.0399 in H_2O

υ_3 = 720 ft/min, H_υ = 0.0323 in H_2O $= \left(\dfrac{720}{4005}\right)^2$

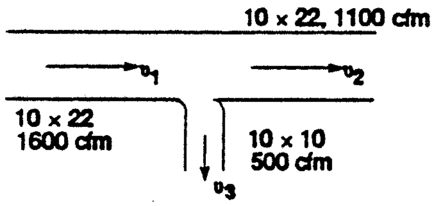

└Fig. 19.2┘

19.19 Tee, flow in branch; $C = 1.00$: $H_L = 1.00(0.0839) =$ **0.0839 in H_2O**

19.20 Tee, flow through main, $C = 0.10$: $H_L = 0.10(0.0839) =$ **0.00839 in H_2O**

19.21 $Q = 0.20$ m^3/s; $D = 200$ mm dia.; $\upsilon = 6.40$ m/s

$$H_\upsilon = \left(\frac{\upsilon}{1.289}\right)^2 Pa = \left(\frac{6.40}{1.289}\right)^2 = 24.7 \text{ Pa}; \ C = 0.42 \text{ 3-pc elbow}$$

$H_L = 0.42(24.7 \text{ Pa}) =$ **10.4 Pa**

19.22 Mitered elbow, $C = 1.20$: $H_L = 1.20(24.7) =$ **29.6 Pa**

19.23 $Q = 0.85$ m^3/s; $D = 400$ mm; $\upsilon = 6.8$ m/s

$$H_\upsilon = \left(\frac{\upsilon}{1.289}\right)^2 = \left(\frac{6.8}{1.289}\right)^2 = 27.8 \text{ Pa}; \ C = 4.5 \text{ damper at } 30°$$

$H_L = CH_\upsilon = 4.5(27.8 \text{ Pa}) =$ **125 Pa**

19.24 Use $Q = 700$ cfm; $D = 12$ in dia.; $\upsilon = 900$ ft/min; $h_L = 0.12$ in H_2O per 100 ft

$$H_\upsilon = \left(\frac{\upsilon}{4005}\right)^2 = \left(\frac{900}{4005}\right)^2 = 0.0505 \text{ in } H_2O$$

Duct: $H_L = 0.12 \text{ in } H_2O \left(\dfrac{42}{100}\right) = 0.0504 \text{ in } H_2O$

Damper: $H_L = CH_\upsilon = 0.20(0.0505) = 0.0101$ in H_2O
2, 3-pc elbows: $H_L = 2(0.42)(0.0505) = 0.0424$ in H_2O
Outlet grille: $H_L = 0.06$ in H_2O (Table 19.3)

$H_{L_{total}}$ = **0.1629 in H_2O**

19.25 12 × 20 rect → 16.8 in Circ. Eq.; use $Q = 1500$ cfm; $\upsilon = 980$ ft/min

$h_L = 0.08$ in H_2O per 100 ft; $H_\upsilon = \left(\frac{980}{4005}\right)^2 = 0.060$ in H_2O

Duct: $H_L = 0.08 \text{ in } H_2O\left(\frac{38}{100}\right) = 0.0304$ in H_2O

Damper: $H_L = CH_\upsilon = 0.20(0.060) = 0.0120$ in H_2O
3 elbows: $H_L = 3(0.22)(0.060) = 0.0396$ in H_2O
Outlet grille: $H_L = 0.060$ in H_2O (Table 19.3)

$H_{L_{total}}$ = **0.1420 in H_2O**

19.26 $Q = 0.80\ \text{m}^3/\text{s}$
For square duct:

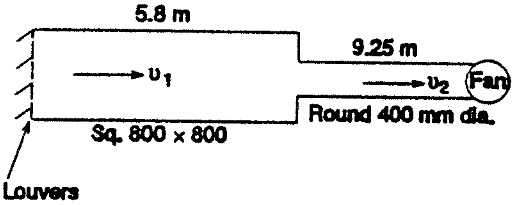

$$D_{e1} = \frac{1.3[(800)(800)]^{5/8}}{(800+800)^{1/4}} = 875 \text{ mm Circ. Eq.}$$

$$\upsilon_1 = \frac{Q}{A} = \frac{0.80\ \text{m}^3/\text{s}}{\pi(0.875\ \text{m})^2/4} = 1.33 \text{ m/s}$$

$$H_\upsilon = \left(\frac{\upsilon}{1.289}\right)^2 = \left(\frac{1.33}{1.289}\right)^2 = 1.065 \text{ Pa}$$

$D_{e1}/D_2 = 875/400 = 2.19 \rightarrow K = 0.40$ (Fig. 10.7) Sudden contraction
$H_{L1} = 0.40(1.065 \text{ Pa}) = 0.426$ Pa

$H_{L2} = 17$ Pa (Table 19.3) louvers

Duct 1, H_L too low for chart in Fig. 19.3 — Neglect

Duct 2, $\upsilon_2 = 6.30$ m/s; $H_L = (1.10 \text{ Pa/m})(9.25 \text{ m}) = 10.2$ Pa

$H_{L_{tot}} = 0.426 + 17 + 0 + 11.1 = 27.6$ Pa Pressure drop from p_{atm}
Then p_{fan} = **−27.6 P**

SPREADSHEETS

APPLIED FLUID MECHANICS	*I Power SI:* CLASS I SERIES SYSTEMS
Objective: *Pump power*	*Reference points for the energy equation:*
Example Problem 11.1	Point 1: At surface of lower reservoir
Fig. 11.2	Point 2: At surface of upper reservoir

System Data: SI Metric Units

Volume flow rate: Q =	*0.015*	*m^3/s*	*Elevation at point 1 =*	*2.00*	*m*
Pressure at point 1 =	*0*	*kPa*	*Elevation at point 2 =*	*12.00*	*m*
Pressure at point 2 =	*0*	*kPa*	*If Ref. pt. is in pipe: Set v1 "= B20" OR Set v2 "= E20"*		
Velocity at point 1 =	*0*	*m/s -->*	Vel head at point 1 =	0	m
Velocity at point 2 =	*0*	*m/s -->*	Vel head at point 2 =	0	m

Fluid Properties: May need to compute: $\nu = \eta/\rho$

Specific weight =	*7.74*	*kN/m^3*	*Kinematic viscosity =*	*7.10E-07*	*m^2/s*

Pipe 1: 4-in Schedule 40 steel pipe			**Pipe 2: 2-in Schedule 40 steel pipe**			
Diameter: D =	*0.1023*	*m*	*Diameter: D =*	*0.0525*	*m*	
Wall roughness: ε =	*4.60E-05*	*m*	*Wall roughness: ε =*	*4.60E-05*	*m*	*[See Table 8.2]*
Length: L =	*15*	*m*	*Length: L =*	*200*	*m*	
Area: *A* =	8.22E-03	m^2	Area: *A* =	2.16E-03	m^2	$[A = \pi D^2/4]$
D/ε =	2224		*D/ε* =	1141		Relative roughness
L/D =	147		*L/D* =	3810		
Flow Velocity =	1.82	m/s	Flow Velocity =	6.93	m/s	$[v = Q/A]$
Velocity head =	0.170	m	Velocity head =	2.447	m	$[v^2/2g]$
Reynolds No. =	2.63E+05		Reynolds No. =	5.13E+05		$[N_R = vD/\nu]$
Friction factor: *f* =	0.0182		Friction factor: *f* =	0.0198		Using Eq. 8-7

Energy losses-Pipe 1:	*K*	Qty.				
Pipe: K_1 = f(L/D) =	2.67	1	Energy loss h_{L1} =	0.453	m	Friction
Entrance loss: K_2 =	*0.50*	*1*	Energy loss h_{L2} =	0.085	m	
Element 3: K_3 =	*0.00*	*1*	Energy loss h_{L3} =	0.000	m	
Element 4: K_4 =	*0.00*	*1*	Energy loss h_{L4} =	0.000	m	
Element 5: K_5 =	*0.00*	*1*	Energy loss h_{L5} =	0.000	m	
Element 6: K_6 =	*0.00*	*1*	Energy loss h_{L6} =	0.000	m	
Element 7: K_7 =	*0.00*	*1*	Energy loss h_{L7} =	0.000	m	
Element 8: K_8 =	*0.00*	*1*	Energy loss h_{L8} =	0.000	m	

Energy losses-Pipe 2:	*K*	Qty.				
Pipe: K_1 = f(L/D) =	75.35	1	Energy loss h_{L1} =	184.40	m	Friction
Globe valve: K_2 =	*6.46*	*1*	Energy loss h_{L2} =	15.81	m	
2 std elbows: K_3 =	*0.57*	*2*	Energy loss h_{L3} =	2.79	m	
Exit loss: K_4 =	*1.00*	*1*	Energy loss h_{L4} =	2.45	m	
Element 5: K_5 =	*0.00*	*1*	Energy loss h_{L5} =	0.00	m	
Element 6: K_6 =	*0.00*	*1*	Energy loss h_{L6} =	0.00	m	
Element 7: K_7 =	*0.00*	*1*	Energy loss h_{L7} =	0.00	m	
Element 8: K_8 =	*0.00*	*1*	Energy loss h_{L8} =	0.00	m	

	Total energy loss h_{Ltot} =	205.98	m
Results:	Total head on pump: h_A =	216.0	m
	Power added to fluid: P_A =	25.08	kW
	Pump efficiency =	*76.00*	*%*
	Power input to pump: P_I =	32.99	kW

APPLIED FLUID MECHANICS	*I Power US:* CLASS I SERIES SYSTEMS
Objective: ***Pump power***	*Reference points for the energy equation:*
Problem 11.29	Pt. 1: At pump inlet - Point A in Figure 11.23
Fig. 11.26	Pt. 2: In free stream of fluid outside nozzle

System Data: **U.S. Customary Units**

Volume flow rate: Q =	*0.5*	*ft³/s*	*Elevation at point 1 =*	*0*	*ft*
Pressure at point 1 =	*-3.5*	*psig*	*Elevation at point 2 =*	*80*	*ft*
Pressure at point 2 =	*0*	*psig*	*If Ref. pt. is in pipe: Set v_1 "= B20" OR Set v_2 "= E20"*		
Velocity at point 1 =	*9.74*	*ft/s -->*	Vel head at point 1 =	1.47	*ft*
Velocity at point 2 =	*54.24*	*ft/s -->*	Vel head at point 2 =	45.68	*ft*

Fluid Properties: May need to compute: $\nu = \eta/\rho$

Specific weight =	*64.00*	*lb/ft³*	*Kinematic viscosity =*	*2.01E-05*	*ft²/s*

Pipe 1: 3-in Schedule 40 steel pipe			***Pipe 2: 2 1/2-in Schedule 40 steel pipe***			
Diameter: D =	*0.2557*	*ft*	*Diameter: D =*	*0.2058*	*ft*	
Wall roughness: ε =	*1.50E-04*	*ft*	*Wall roughness: ε =*	*1.50E-04*	*ft*	*[See Table 8.2]*
Length: L =	*0*	*ft*	*Length: L =*	*82*	*ft*	
Area: *A* =	0.05135	ft²	Area: *A* =	0.03326	ft²	[$A = \pi D^2/4$]
D/ε =	1705		*D/ε* =	1372		Relative roughness
L/D =	0		*L/D* =	398		
Flow Velocity =	9.74	ft/s	Flow Velocity =	15.03	ft/s	[$v = Q/A$]
Velocity head =	1.472	ft	Velocity head =	3.508	ft	[$v^2/2g$]
Reynolds No. =	1.24E+05		Reynolds No. =	1.54E+05		[$N_R = vD/\nu$]
Friction factor: *f* =	0.0203		Friction factor: *f* =	0.0205		Using Eq. 8-7

Energy losses-Pipe 1:	*K*	Qty.			
Pipe: K_1 =	0.00	1	Energy loss h_{L1} =	0.00	ft
Element 2: K_2 =	*0.00*	*1*	Energy loss h_{L2} =	0.00	ft
Element 3: K_3 =	*0.00*	*1*	Energy loss h_{L3} =	0.00	ft
Element 4: K_4 =	*0.00*	*1*	Energy loss h_{L4} =	0.00	ft
Element 5: K_5 =	*0.00*	*1*	Energy loss h_{L5} =	0.00	ft
Element 6: K_6 =	*0.00*	*1*	Energy loss h_{L6} =	0.00	ft
Element 7: K_7 =	*0.00*	*1*	Energy loss h_{L7} =	0.00	ft
Element 8: K_8 =	*0.00*	*1*	Energy loss h_{L8} =	0.00	ft

Energy losses-Pipe 2:	*K*	Qty.			
Pipe: K_1 =	8.16	1	Energy loss h_{L1} =	28.61	ft
Elbow: K_2 =	*0.54*	*1*	Energy loss h_{L2} =	1.89	ft
Nozzle: K_3 =	*32.60*	*1*	Energy loss h_{L3} =	114.37	ft
Element 4: K_4 =	*0.00*	*1*	Energy loss h_{L4} =	0.00	ft
Element 5: K_5 =	*0.00*	*1*	Energy loss h_{L5} =	0.00	ft
Element 6: K_6 =	*0.00*	*1*	Energy loss h_{L6} =	0.00	ft
Element 7: K_7 =	*0.00*	*1*	Energy loss h_{L7} =	0.00	ft
Element 8: K_8 =	*0.00*	*1*	Energy loss h_{L8} =	0.00	ft

	Total energy loss h_{Ltot} =	144.88	ft
Results:	Total head on pump: h_A =	277.0	ft
	Power added to fluid: P_A =	16.11	hp
	Pump efficiency =	*76.00*	*%*
	Power input to pump: P_I =	21.20	hp

APPLIED FLUID MECHANICS	*I Pressure SI:* CLASS I SERIES SYSTEMS
Objective: ***Pressure: Point 2***	*Reference points for the energy equation:*
Problem 11.7-Mott-Modified	Pt. 1: In pipe at Point A
Fig. 11.17	Pt. 2: In pipe at Point B

System Data: **SI Metric Units**

Volume flow rate: Q =	*2.83E-05*	*m^3/s*	*Elevation at point 1 =*	*0*	*m*
Pressure at point 1 =	*100*	*kPa*	*Elevation at point 2 =*	*1.2*	*m*
Pressure at point 2 to be determined			If Ref. pt. is in pipe: Set v_1 "= B20" OR Set v_2 "= E20"		
Velocity at point 1 =	*0.346*	*m/s -->*	Vel head at point 1 =	0.006104	m
Velocity at point 2 =	*0.346*	*m/s -->*	Vel head at point 2 =	0.006104	m

Fluid Properties: May need to compute: $\nu = \eta/\rho$

Specific weight =	*12.2625*	*kN/m^3*	*Kinematic viscosity =*	*2.40E-07*	*m^2/s*

Pipe 1: 1/2-in x 0.049 steel tube			***Pipe 2: None***			
Diameter: D =	*0.01021*	*m*	*Diameter: D =*	*0.09797*	*m*	
Wall roughness: ε =	*1.50E-06*	*m*	*Wall roughness: ε =*	*1.50E-06*	*m*	*See Table 8.2*
Length: L =	*30*	*m*	*Length: L =*	*0*	*m*	
Area: *A* =	8.19E-05	m^2	Area: *A* =	7.54E-03	m^2	[$A = \pi D^2/4$]
D/ε =	6807		*D/ε* =	65313		Relative roughness
L/D =	2938		*L/D* =	0		
Flow Velocity =	0.346	m/s	Flow Velocity =	0.0038	m/s	[v = Q/A]
Velocity head =	0.006104	m	Velocity head =	0.0000	m	
Reynolds No. =	1.47E+04		Reynolds No. =	1.53E+03		[$N_R = vD/\nu$]
Friction factor: *f* =	0.0282		Friction factor: *f* =	0.0563		Using Eq. 8-7

Energy losses-Pipe 1:	*K*	Qty.				
Pipe: K_1 = f(L/D) =	82.96	1	Energy loss h_{L1} =	0.5064	m	Friction
Check Valve: K_2 =	*1.95*	*1*	Energy loss h_{L2} =	0.0119	m	(f_T = 0.013)
Globe Valve: K_3 =	*4.420*	*1*	Energy loss h_{L3} =	0.0270	m	(f_T = 0.013)
Return Bends: K_4 =	*0.65*	*8*	Energy loss h_{L4} =	0.0317	m	(f_T = 0.013)
Element 5: K_5 =	*0.00*	*1*	Energy loss h_{L5} =	0.00	m	
Element 6: K_6 =	*0.00*	*1*	Energy loss h_{L6} =	0.00	m	
Element 7: K_7 =	*0.00*	*1*	Energy loss h_{L7} =	0.00	m	
Element 8: K_8 =	*0.00*	*1*	Energy loss h_{L8} =	0.00	m	

Energy losses-Pipe 2:	*K*	Qty.				
Pipe: K_1 = f(L/D) =	0.00	1	Energy loss h_{L1} =	0.00	m	Friction
Element 2: K_2 =	*0.00*	*1*	Energy loss h_{L2} =	0.00	m	
Element 3: K_3 =	*0.00*	*1*	Energy loss h_{L3} =	0.00	m	
Element 4: K_4 =	*0.00*	*1*	Energy loss h_{L4} =	0.00	m	
Element 5: K_5 =	*0.00*	*1*	Energy loss h_{L5} =	0.00	m	
Element 6: K_6 =	*0.00*	*1*	Energy loss h_{L6} =	0.00	m	
Element 7: K_7 =	*0.00*	*1*	Energy loss h_{L7} =	0.00	m	
Element 8: K_8 =	*0.00*	*1*	Energy loss h_{L8} =	0.00	m	

Total energy loss h_{Ltot} = 0.5770 m

Results:

Pressure at target point: **78.21 kPa**

APPLIED FLUID MECHANICS	I Pressure US: CLASS I SERIES SYSTEMS
Objective: ***Pressure: Point 2***	*Reference points for the energy equation:*
Problem 11.3	Pt. 1: In pipe at Point A at outlet of pump
Fig. 11.13	Pt. 2: In pipe at Point B at inlet to the hydraulic cylinder

System Data: **US Customary Units**

Volume flow rate: Q =	*0.13363 ft^3/s*	*Elevation at point 1 =* 0 ft
Pressure at point 1 =	*212.77 psig*	*Elevation at point 2 =* 25 ft
Pressure at point 2 =	*200 psig*	If Ref. pt. is in pipe: Set v1 "= B20" OR Set v2 "= E20"
Velocity at point 1 =	*5.73 ft/s*	Vel head at point 1 = 0.51 ft
Velocity at point 2 =	*5.73 ft/s*	Vel head at point 2 = 0.51 ft

Fluid Properties: May need to compute: $\nu = \eta/\rho$

Specific weight = 56.16 lb/ft^3 *Kinematic viscosity =* 3.44E-05 ft^2/s

Pipe 1: 2-in Sch. 40 steel pipe		***Pipe 2: None***		
Diameter: D =	*0.1723 ft*	*Diameter: D =*	*0.1723 ft*	
Wall roughness: ε =	*1.50E-04 ft*	*Wall roughness: ε =*	*1.50E-04 ft*	*See Table 8.2*
Length: L =	*50 ft*	*Length: L =*	*0 ft*	
Area: *A* =	2.33E-02 ft^2	Area: *A* =	2.33E-02 ft^2	$[A = \pi D^2/4]$
D/ε =	1149	*D/ε* =	1149	Relative roughness
L/D =	290	*L/D* =	0	
Flow Velocity =	5.73 ft/s	Flow Velocity =	5.73 ft/s	[v = Q/A]
Velocity head =	0.510 ft	Velocity head =	0.510 ft	[v2/2g]
Reynolds No. =	2.87E+04	Reynolds No. =	2.87E+04	$[N_R = vD/\nu]$
Friction factor: *f* =	0.0260	Friction factor: *f* =	0.0260	Using Eq. 8-7

Energy losses-Pipe 1:	*K*	Qty.			
Pipe: K_1 = f(L/D) =	7.55	1	Energy loss h_{L1} =	3.85 ft	Friction
Control valve: K_2 =	*6.50*	*1*	Energy loss h_{L2} =	3.32 ft	
2 elbows: K_3 =	*0.57*	*2*	Energy loss h_{L3} =	0.58 ft	$(f_T$=0.019)
Element 4: K_4 =	*0.00*	*1*	Energy loss h_{L4} =	0.00 ft	
Element 5: K_5 =	*0.00*	*1*	Energy loss h_{L5} =	0.00 ft	
Element 6: K_6 =	*0.00*	*1*	Energy loss h_{L6} =	0.00 ft	
Element 7: K_7 =	*0.00*	*1*	Energy loss h_{L7} =	0.00 ft	
Element 8: K_8 =	*0.00*	*1*	Energy loss h_{L8} =	0.00 ft	

Energy losses in Pipe 2:		Qty.		
Pipe: K_1 = f(L/D) =	0.00	1	Energy loss h_{L1} =	0.00 ft
Element 2: K_2 =	*0.00*	*1*	Energy loss h_{L2} =	0.00 ft
Element 3: K_3 =	*0.00*	*1*	Energy loss h_{L3} =	0.00 ft
Element 4: K_4 =	*0.00*	*1*	Energy loss h_{L4} =	0.00 ft
Element 5: K_5 =	*0.00*	*1*	Energy loss h_{L5} =	0.00 ft
Element 6: K_6 =	*0.00*	*1*	Energy loss h_{L6} =	0.00 ft
Element 7: K_7 =	*0.00*	*1*	Energy loss h_{L7} =	0.00 ft
Element 8: K_8 =	*0.00*	*1*	Energy loss h_{L8} =	0.00 ft

	Total energy loss h_{Ltot} =	7.75 ft
Results:	Total change in pressure:	**-12.77** psi
	Pressure at target point:	**200.00 psig**

APPLIED FLUID MECHANICS	*II-A & II-B SI:* CLASS II SERIES SYSTEMS
Objective: Volume flow rate	**Method II-A: No minor losses**
Example Problem 11.3	Uses Equation 11-3 to estimate the allowable volume flow rate
Figure 11.7	to maintain desired pressure at point 2 for a given pressure at point 1

System Data:	**SI Metric Units**				
Pressure at point 1 =	*120*	kPa	*Elevation at point 1 =*	*0*	m
Pressure at point 2 =	*60*	kPa	*Elevation at point 2 =*	*0*	m
Energy loss: h_L =	6.95	m			
Fluid Properties:			May need to compute: $\nu = \eta/\rho$		
Specific weight =	*8.63*	*kN/m^3*	*Kinematic viscosity =*	*1.08E-05*	*m^2/s*

Pipe data: 6-in Schedule 40 steel pipe						
Diameter: D =	*0.1541*	*m*				
Wall roughness: ε =	*4.60E-05*	*m*				
Length: L =	*100*	*m*	***Results: Maximum values***			
Area: *A* =	0.018651	m^2	Volume flow rate: *Q* =	0.0569	m^3/s	Using Eq. 11-3
D/ε =	3350		Velocity: *v* =	3.05	m/s	

CLASS II SERIES SYSTEMS			*Volume flow rate: Q =*	*0.0538*	*m^3/s*	
Method II-B: *Use results of Method IIA;*			Given: Pressure p_1 =	120	kPa	
Include minor losses;			**Pressure p_2 =**	**60.18**	**kPa**	
then pressure at Point 2 is computed			***NOTE: Should be >***	**60**	**kPa**	
Additional Pipe Data:			***Adjust estimate for Q until p_2***			
L/D =	649		***is greater than desired pressure.***			
Flow Velocity =	2.88	m/s	Velocity at point 1 =	2.88	m/s	|--> If velocity is in pipe:
Velocity head =	0.424	m	Velocity at point 2 =	2.88	m/s	|--> Enter "=B24"
Reynolds No. =	4.12E+04		Vel. head at point 1 =	0.424	m	
Friction factor: *f* =	0.0228		Vel. head at point 2 =	0.424	m	

Energy losses in Pipe:	*K*	Qty.			
Pipe: $K_1 = f(L/D)$ =	14.76	1	Energy loss h_{L1} =	6.26 m	Friction
2 std. elbows: K_2 =	*0.45*	*2*	Energy loss h_{L2} =	0.38 m	
Butterfly valve: K_3 =	*0.68*	*1*	Energy loss h_{L3} =	0.29 m	
Element 4: K_4 =	*0.00*	*1*	Energy loss h_{L4} =	0.00 m	
Element 5: K_5 =	*0.00*	*1*	Energy loss h_{L5} =	0.00 m	
Element 6: K_6 =	*0.00*	*1*	Energy loss h_{L6} =	0.00 m	
Element 7: K_7 =	*0.00*	*1*	Energy loss h_{L7} =	0.00 m	
Element 8: K_8 =	*0.00*	*1*	Energy loss h_{L8} =	0.00 m	
			Total energy loss h_{Ltot} =	6.93 m	

APPLIED FLUID MECHANICS	*II-A & II-B US:* CLASS II SERIES SYSTEMS
Objective: Volume flow rate	**Method II-A: No minor losses**
Problem 11.10	Uses Equation 11-3 to find maximum allowable volume flow rate to maintain desired pressure at point 2 for a given pressure at point 1

System Data: **US Customary Units**

Pressure at point 1 =	*250*	psig	*Elevation at point 1 =*	*55*	ft
Pressure at point 2 =	*180*	psig	*Elevation at point 2 =*	*0*	ft

Energy loss: h_L = *202.22* ft

Fluid Properties: May need to compute: $\nu = \eta/\rho$

Specific weight = *68.47* *lb/ft³* *Kinematic viscosity =* *1.59E-04* *ft²/s*

Pipe data: 4-in Sch 40 steel pipe					
Diameter: D =	*0.512*	*ft*			
Wall roughness: ε =	*4.00E-04*	*ft*			
Length: L =	*5000*	*ft*	***Results: Maximum values***		
Area: *A* =	*0.20589*	ft²	Volume flow rate: Q =	1.4500 ft³/s	Using Eq. 11-3
D/ε =	*1280*		Velocity: v =	7.04 ft/s	

CLASS II SERIES SYSTEMS			*Volume flow rate: Q =*	*1.45*	*ft³/s*
Method II-B: *Use results of Method IIA;*			Given: Pressure p_1 =	250	psig
Include minor losses;			**Pressure p_2 =**	**179.77**	**psig**
then pressure at Point 2 is computed			***NOTE: Should be >***	**180**	**psig**
Additional Pipe Data:			***Adjust estimate for Q until p_2***		
L/D =	9766		***is equal or greater than desired.***		
Flow Velocity =	7.04	ft/s	Velocity at point 1 =	7.04	ft/s |--> If velocity is in pipe:
Velocity head =	0.770	ft	Velocity at point 2 =	7.04	ft/s |--> Enter "=B24"
Reynolds No. =	2.27E+04		Vel. head at point 1 =	0.77	ft
Friction factor: *f* =	0.0269		Vel. head at point 2 =	0.77	ft
Energy losses in Pipe:	*K*	Qty.			
Pipe: K_1 = f(L/D) =	263.18	1	Energy loss h_{L1} =	202.69	ft Friction
Element 2: K_2 =	*0.00*	*1*	Energy loss h_{L2} =	0.00	ft
Element 3: K_3 =	*0.00*	*1*	Energy loss h_{L3} =	0.00	ft
Element 4: K_4 =	*0.00*	*1*	Energy loss h_{L4} =	0.00	ft
Element 5: K_5 =	*0.00*	*1*	Energy loss h_{L5} =	0.00	ft
Element 6: K_6 =	*0.00*	*1*	Energy loss h_{L6} =	0.00	ft
Element 7: K_7 =	*0.00*	*1*	Energy loss h_{L7} =	0.00	ft
Element 8: K_8 =	*0.00*	*1*	Energy loss h_{L8} =	0.00	ft
			Total energy loss h_{Ltot} =	202.69	ft

APPLIED FLUID MECHANICS		*III-A & III-B SI:* CLASS III SERIES SYSTEMS	
Objective: Minimum pipe diameter		*Method III-A: Uses Equation 11-13 to compute the minimum size of pipe of a given length that will flow a given volume flow rate of fluid with a limited pressure drop. (No minor losses)*	
Problem 11.18			
***System Data:* SI Metric Units**		***Fluid Properties:***	
Pressure at point 1 =	*150* kPa	*Specific weight =*	*9.53* kN/m^3
Pressure at point 2 =	*0* kPa	*Kinematic Viscosity =*	*3.60E-07* m^2/s
Elevation at point 1 =	*0* m	**Intermediate Results in Eq. 11-13:**	
Elevation at point 2 =	*0* m	L/gh_L =	0.194292
Allowable Energy Loss: h_L =	15.74 m	Argument in bracket:	2.89E-22
Volume flow rate: Q =	*0.06* m^3/s	**Final Minimum Diameter:**	
Length of pipe: L =	*30* m	Minimum diameter: *D* =	0.0908 m
Pipe wall roughness: ε =	*1.50E-06* m		

CLASS III SERIES SYSTEMS			*Specified pipe diameter: D =*	*0.09797* m
***Method III-B:** Use results of Method III-A; Specify actual diameter; Include minor losses; then pressure at Point 2 is computed.*			4-inch Type K copper tube	
			If velocity is in the pipe, enter "=B23" for value	
Additional Pipe Data:			*Velocity at point 1 =*	*7.96* m/s
			Velocity at point 2 =	*7.96* m/s
Flow area: *A* =	0.007538 m^2		Vel. head at point 1 =	3.229 m
Relative roughness: *D*/ε =	65313		Vel. head at point 2 =	3.229 m
L/D =	306		***Results:***	
Flow Velocity =	7.96 m/s		*Given pressure at point 1 =*	150 kPa
Velocity head =	3.229 m		*Desired pressure at point 2 =*	0 kPa
Reynolds No. =	2.17E+06		***Actual pressure at point 2 =***	***48.13 kPa***
Friction factor: *f* =	0.0108		***(Actual p_2 should be > desired pressure)***	
Energy losses in Pipe:	*K*	Qty.		
Pipe Friction: $K_1 = f(L/D)$ =	3.31	1	Energy loss h_{L1} =	10.69 m
Element 2: K_2 =	*0.00*	*1*	Energy loss h_{L2} =	0.00 m
Element 3: K_3 =	*0.00*	*1*	Energy loss h_{L3} =	0.00 m
Element 4: K_4 =	*0.00*	*1*	Energy loss h_{L4} =	0.00 m
Element 5: K_5 =	*0.00*	*1*	Energy loss h_{L5} =	0.00 m
Element 6: K_6 =	*0.00*	*1*	Energy loss h_{L6} =	0.00 m
Element 7: K_7 =	*0.00*	*1*	Energy loss h_{L7} =	0.00 m
Element 8: K_8 =	*0.00*	*1*	Energy loss h_{L8} =	0.00 m
			Total energy loss h_{Ltot} =	10.69 m

APPLIED FLUID MECHANICS			III-A & III-B US: CLASS III SERIES SYSTEMS		
Objective: Minimum pipe diameter			*Method III-A: Uses Equation 11-8 to compute the minimum size of pipe of a given length that will flow a given volume flow rate of fluid with a limited pressure drop. (No minor losses)*		
Example Problem 11.6					
***System Data:* SI Metric Units**			***Fluid Properties:***		
Pressure at point 1 =	*102*	psig	*Specific weight =*	*62.4*	lb/ft^3
Pressure at point 2 =	*100*	psig	*Kinematic Viscosity =*	*1.21E-05*	ft^2/s
Elevation at point 1 =	*0*	ft	**Intermediate Results in Eq. 11-8:**		
Elevation at point 2 =	*0*	ft	L/gh_L =	0.672878	
Allowable Energy Loss: h_L =	4.62	ft	Argument in bracket:	5.77E-09	
Volume flow rate: Q =	*0.5*	ft^3/s	**Final Minimum Diameter:**		
Length of pipe: L =	*100*	ft	Minimum diameter: D =	0.3090	ft
Pipe wall roughness: ε =	*1.50E-04*	ft			

CLASS III SERIES SYSTEMS			*Specified pipe diameter: D =*	*0.3355*	ft
***Method III-B:** Use results of Method III-A; Specify actual diameter; Include minor losses; then pressure at Point 2 is computed.*			4-inch Schedule 40 steel pipe		
Additional Pipe Data:			***If velocity is in the pipe, enter "=B23" for value***		
Flow area: A =	0.08840	ft^2	Velocity at point 1 =	5.66	ft/s
Relative roughness: D/ε =	2237		Velocity at point 2 =	5.66	ft/s
L/D =	298		Vel. head at point 1 =	0.497	ft
Flow Velocity =	5.66	ft/s	Vel. head at point 2 =	0.497	ft
Velocity head =	0.497	ft	***Results:***		
Reynolds No. =	1.57E+05		*Given pressure at point 1 =*	102	psig
Friction factor: f =	0.0191		*Desired pressure at point 2 =*	100	psig
			Actual pressure at point 2 =	***100.46***	***psig***
			(Compare actual with desired pressure at point 2)		

Energy losses in Pipe:	*K*	Qty.			
Pipe Friction: $K_1 = f(L/D)$ =	5.70	1	Energy loss h_{L1} =	2.83	ft
Two long rad. elbows: K_2 =	*0.34*	*2*	Energy loss h_{L2} =	0.34	ft
Butterfly valve: K_3 =	*0.77*	*1*	Energy loss h_{L3} =	0.38	ft
Element 4: K_4 =	*0.00*	*1*	Energy loss h_{L4} =	0.00	ft
Element 5: K_5 =	*0.00*	*1*	Energy loss h_{L5} =	0.00	ft
Element 6: K_6 =	*0.00*	*1*	Energy loss h_{L6} =	0.00	ft
Element 7: K_7 =	*0.00*	*1*	Energy loss h_{L7} =	0.00	ft
Element 8: K_8 =	*0.00*	*1*	Energy loss h_{L8} =	0.00	ft
			Total energy loss h_{Ltot} =	3.55	ft

APPLIED FLUID MECHANICS	*System Curve US:* CLASS I SERIES SYSTEMS
Objective: ***System Curve***	*Reference points for the energy equation:*
Ex. Problem 13.4	Pt. 1: Surface of lower reservoir
Fig. 13.40	Pt. 2: Surface of upper reservoir

System Data: **U.S. Customary Units**

Volume flow rate: Q =	*0.5011 ft³/s*		*Elevation at point 1 =*	*0 ft*	
Pressure at point 1 =	*0 psig*		*Elevation at point 2 =*	*80 ft*	
Pressure at point 2 =	*35 psig*		*If Ref. pt. is in pipe: Set v_1 "= B20" OR Set v_2 "= E20"*		
Velocity at point 1 =	*0.00 ft/s -->*		Vel head at point 1 =	0.00 *ft*	
Velocity at point 2 =	*0.00 ft/s -->*		Vel head at point 2 =	0.00 *ft*	

Fluid Properties: May need to compute: $\nu = \eta/\rho$

Specific weight =	*62.40 lb/ft³*	*Kinematic viscosity =*	*1.21E-05 ft²/s*

Pipe 1: 3 1/2-in Schedule 40 steel pipe		***Pipe 2: 2 1/2-in Schedule 40 steel pipe***		
Diameter: D =	*0.2957 ft*	*Diameter: D =*	*0.2058 ft*	
Wall roughness: ε =	*1.50E-04 ft*	*Wall roughness: ε =*	*1.50E-04 ft*	*[See Table 8.2]*
Length: L =	*8 ft*	*Length: L =*	*360 ft*	
Area: *A* =	0.06867 ft²	Area: *A* =	0.03326 ft²	[$A = \pi D^2/4$]
D/ε =	1971	*D/ε* =	1372	Rel. roughness
L/D =	27	*L/D* =	1749	
Flow Velocity =	7.30 ft/s	Flow Velocity =	15.06 ft/s	[$v = Q/A$]
Velocity head =	0.827 ft	Velocity head =	3.524 ft	[$v^2/2g$]
Reynolds No. =	1.78E+05	Reynolds No. =	2.56E+05	[$N_R = vD/\nu$]
Friction factor: *f* =	0.0192	Friction factor: *f* =	0.0197	Using Eq. 8-7

Energy losses-Pipe 1:	*K*	Qty.	Total *K*		
Pipe: K_1 =	0.519	1	*0.519*	Energy loss h_{L1} =	0.43 ft
Entrance: K_2 =	*0.500*	*1*	*0.500*	Energy loss h_{L2} =	0.41 ft
Gate Valve: K_3 =	*0.136*	*1*	*0.136*	Energy loss h_{L3} =	0.11 ft
Element 4: K_4 =	*0.000*	*1*	0.000	Energy loss h_{L4} =	0.00 ft
Element 5: K_5 =	*0.000*	*1*	0.000	Energy loss h_{L5} =	0.00 ft
Element 6: K_6 =	*0.000*	*1*	0.000	Energy loss h_{L6} =	0.00 ft
Element 7: K_7 =	*0.000*	*1*	0.000	Energy loss h_{L7} =	0.00 ft
Element 8: K_8 =	*0.000*	*1*	0.000	Energy loss h_{L8} =	0.00 ft

Energy losses-Pipe 2:	*K*	Qty.	Total *K*		
Pipe: K_1 =	34.488	1	*34.488*	Energy loss h_{L1} =	121.53 ft
Check Valve: K_2 =	*1.800*	*1*	*1.800*	Energy loss h_{L2} =	6.34 ft
Butterfly Valve: K_3 =	*0.810*	*1*	*0.810*	Energy loss h_{L3} =	2.85 ft
Standard Elbow: K_4 =	*0.540*	*2*	*1.080*	Energy loss h_{L4} =	3.81 ft
Exit Loss: K_5 =	*1.000*	*1*	*1.000*	Energy loss h_{L5} =	3.52 ft
Element 6: K_6 =	*0.000*	*1*	0.000	Energy loss h_{L6} =	0.00 ft
Element 7: K_7 =	*0.000*	*1*	0.000	Energy loss h_{L7} =	0.00 ft
Element 8: K_8 =	*0.000*	*1*	0.000	Energy loss h_{L8} =	0.00 ft

	Total energy loss h_{Ltot} =	139.01 ft
Results:	Total head on pump: h_A =	299.8 ft

Figure 13.41 Total head on the pump at the desired operating point for Example Problem 13.4

SYSTEM CURVE - Table 13.3

Q (gpm)	Q (cfs)	h_a (ft)
0	0	160.8
25	0.056	162.9
50	0.111	168.6
75	0.167	177.6
100	0.223	189.9
125	0.278	205.4
150	0.334	224.1
175	0.390	246.1
200	0.445	271.3
225	0.501	299.8
250	0.557	331.4
275	0.612	366.3
300	0.668	
325	0.724	
350	0.780	

PUMP CURVE: 2X3-10 PUMP WITH 9-IN IMPELLER-From Fig. 13.27

Q (gpm)	Total head (ft)
0	370
25	369
50	368
75	366
100	364
125	360
150	355
175	349
200	341
225	332
250	320
275	305
300	285
325	265
350	245

Figure 13.42 Operating Point for Example Problem 13.4

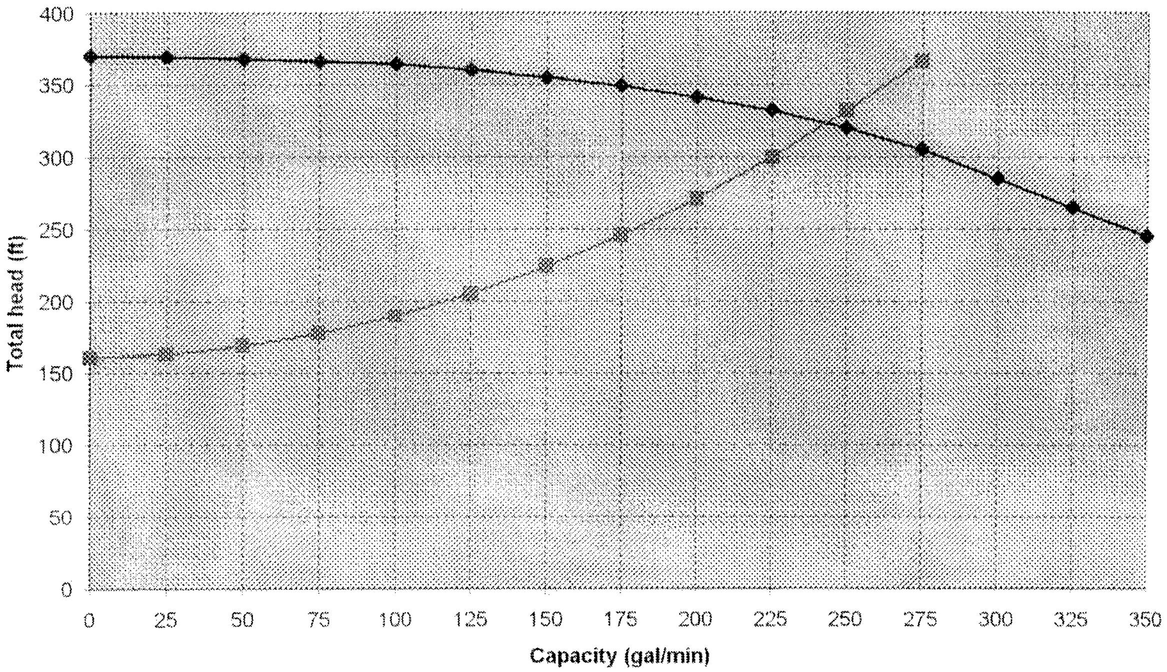

Friction Factor Calculation using Swamee-Jain Equation 8-7

Problem 8.28: Friction factor only; SI data

Use consistent SI or U.S. Customary units

Fluid Properties:	Water at 75 deg C	
Kinematic Viscosity	*3.83E-07*	m^2/s or ft^2/s
Volume flow rate: Q =	*2.15E-04*	m^3/s or ft^3/s
Pipe Data:	*1/2 in Type K Copper*	
Pipe wall roughness: ε =	*1.50E-06*	m or ft
Pipe diameter =	*0.01339*	m or ft
Flow area: *A* =	0.000141	m^2 or ft^2
Relative roughness: *D*/ε =	8927	
Flow Velocity =	1.53	m/s or ft/s
Reynolds No. =	5.34E+04	
Friction factor: *f* =	**0.0209**	Using Eq. 8-7